GRE

DEC 11

PROJECT ID: 1146-39-71

WITH: N/A

COUNTY: OUTAGAMIE

ORDER OF SHEETS

Section No.	1	Title
Section No.	2	Typical Sections and Details
Section No.	3	Estimate of Quantities
Section No.	3	Miscellaneous Quantities
Section No.	4	Right of Way Plat
Section No.	5	Plan and Profile
Section No.	6	Standard Detail Drawings
Section No.	7	Sign Plates
~~Section No.~~	~~8~~	~~Structure Plans~~
Section No.	9	Computer Earthwork Data
Section No.	9	Cross Sections

TOTAL SHEETS = ~~248~~ 249

Additional sheets: 1A, 12A,36A

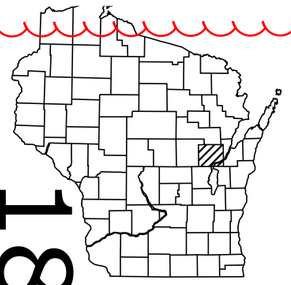

18

DESIGN DESIGNATION

		STH 15
A.A.D.T. 2012	=	18,673
A.A.D.T. 2032	=	24,827
D.H.V.	=	1,142
D.D.	=	59/41
T.	=	5.4%
DESIGN SPEED	=	50 MPH
ESALS	=	7,051,800

CONVENTIONAL SYMBOLS

PLAN

- CORPORATE LIMITS
- PROPERTY LINE
- LOT LINE
- LIMITED HIGHWAY EASEMENT
- EXISTING RIGHT OF WAY
- PROPOSED OR NEW R/W LINE
- SLOPE INTERCEPT
- REFERENCE LINE
- EXISTING CULVERT
- PROPOSED CULVERT (Box or Pipe)
- COMBUSTIBLE FLUIDS (CAUTION)
- MARSH AREA
- WOODED OR SHRUB AREA

PROFILE

- GRADE LINE
- ORIGINAL GROUND
- MARSH OR ROCK PROFILE (To be noted as such) (ROCK)
- SPECIAL DITCH (LABEL)
- GRADE ELEVATION (95.36)
- CULVERT (Profile View)

UTILITIES

- ELECTRIC (E)
- FIBER OPTIC (FO)
- GAS (G)
- SANITARY SEWER (SAN)
- STORM SEWER (SS)
- TELEPHONE (T)
- WATER (W)
- UTILITY PEDESTAL
- POWER POLE
- TELEPHONE POLE

STATE OF WISCONSIN
DEPARTMENT OF TRANSPORTATION

PLAN OF PROPOSED IMPROVEMENT

NEW LONDON - APPLETON

STH 15 AND CTH CB INTERSECTION

STH 15

OUTAGAMIE COUNTY

STATE PROJECT	FEDERAL PROJECT	
	PROJECT	CONTRACT
1146-39-71	WISC 2011830	1

STATE PROJECT NUMBER

1146-39-71

AS-BUILT PLAN

SUPERVISOR: Rebecca Rooyakkers
PROJECT MANAGER: Chuck Karow
PROJECT LEADER: Ed Hoefferle
CONTRACTOR: LaLonde Contractors Incorporated
WORK STARTED: 4/16/12
WORK COMPLETED: 8/28/12

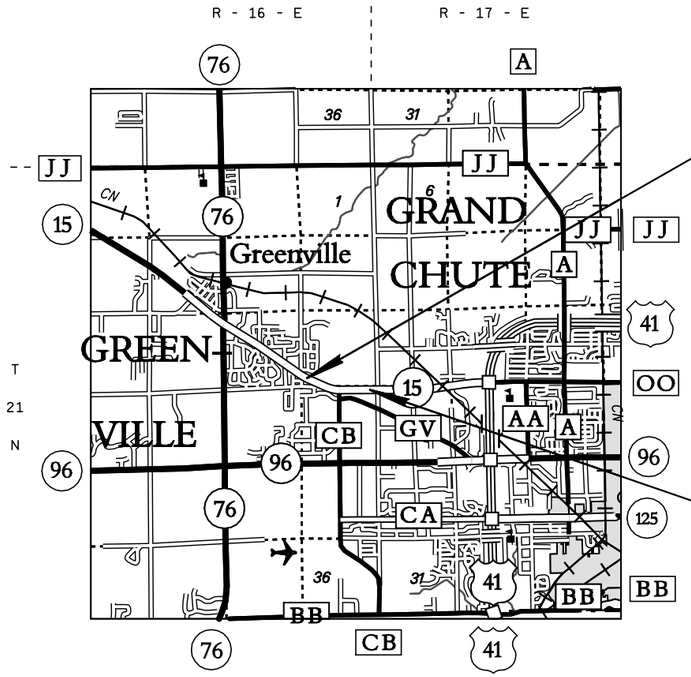

LAYOUT

SCALE 0 1 MI.

TOTAL NET LENGTH OF CENTERLINE = 0.394 MI.

BEGIN PROJECT 1146-39-71

STA 167+18 (EB STH 15)
Y=571586.116
X=800743.884

END PROJECT 1146-39-71

STA 188+00

COORDINATES ON THIS PLAN ARE REFERENCED TO THE WISCONSIN COUNTY COORDINATE SYSTEM (WCCS), NAD 83 (1991) OUTAGAMIE COUNTY.

See page 1A for project benchmarks

Subcontractor List:

Beacon Electric, LLC
Interstate Sawing Co., Inc.
MCC, Inc.
Mega Rentals, Inc.
Peters Concrete Company
Sommers Construction Co., Inc.
Warning Lites of Appleton, Inc.
West-Land Restoration, Inc.
Wisconsin Land Surveying, Inc.

STATE OF WISCONSIN
DEPARTMENT OF TRANSPORTATION

PREPARED BY

Surveyor	WDOT NE REGION
Designer	E HOEFFERLE
Project Manager	C KAROW
Regional Examiner	
Regional Supervisor	R ROOYAKKERS
C.O. Examiner	Cyle Haag

APPROVED FOR THE DEPARTMENT

DATE: 7-28-11 Ed Hoefferle (Signature)

E

Benchmarks: 1146-39-00 STH 15/CTH CB Proposed Round-a-bout

BM 600: 862.42
Chiseled X on bury bolt of fire hydrant at W6177 Neubert Road, located on the East side of parking lot near vacant building that is across the shared parking lot of Dr. Veronica Tavor Family Dental Care. Location is also 0.2 miles West of intersection of Neubert Road and Mayflower Road, with access only from Mayflower road. North of the ROW for STH 15.

BM 601: 860.13
Head of railroad spike on power pole #04-02725 on West Greenville Drive. Location is 0.1 miles East on the South side of West Greenville Drive from intersection of County Road CB.

BM 602: 869.87
Chiseled X on bury bolt of fire hydrant on West side of County Road CB in ditch on East side of School Specialty building.

BM 603: 877.23
Chiseled X on bury bolt of fire hydrant on South ditch of Highway 15 1500' west of the intersection of STH 15 and CTH CB. It is on the North-East corner of parking lot of Toys For Trucks and Heritage Animal Hospital, and is located between the parking lot and Highway 15.

UTILITIES

AT&T WISCONSIN
VINCENT LEBRUN
221 WEST WASHINGTON STREET
4TH FLOOR, OSPE
APPLETON WI 54911
920-735-3076; FAX 920-735-3073
vl1253@att.com

TIME WARNER CABLE
LARRY PIHLSTROM
3520 DESTINATION DRIVE
APPLETON WI 54915
920-831-9211; FAX 920-749-1154
larry.pihlstrom@twcable.com

TOWN OF GREENVILLE
DON SCHINKE
W6860 PARKVIEW DRIVE
GREENVILLE WI 54942
HOME 920-734-8870; CELL 920-841-8550
dschinke@execpc.com

WISCONSIN ELECTRIC POWER CO. D/B/A/ WE ENERGIES - ELECTRIC
DAN SANDE
333 W EVERETT ST
ROOM A299
MILWAUKEE WI 53203-2998
414-221-4578; FAX 414-221-2336 dan.sande@we-energies.com

WISCONSIN ELECTRIC POWER CO. D/B/A/ WE ENERGIES - GAS
DAN SANDE
333 W EVERETT ST
ROOM A299
MILWAUKEE WI 53203-2998
414-221-4578; FAX 414-221-2336 dan.sande@we-energies.com

DNR AREA LIAISON

JAMES DOPERALSKI JR
DEPARTMENT OF NATURAL RESOURCES
NORTHEAST REGION
2984 SHAWANO AVE
GREEN BAY, WI 54313
920-662-5119
JAMES.DOPERALSKI@WISCONSIN.GOV

DIGGERS HOTLINE

Call 811 3 Work Days Before You Dig
or Toll Free (800) 242-8511
Hearing Impaired TDD (800) 542-2289
www.DiggersHotline.com

EMERGENCY CONTACT NUMBERS FOR WE ENERGIES

ELECTRIC 24 HOUR EMERGENCY SERVICE: 1-800-662-4797
GAS 24 HOUR EMERGENCY SERVICE: 1-800-261-5325

COUNTY SURVEYOR OR SURVEYS CONTACT PERSON

OUTAGAMIE COUNTY SURVEYOR
JIM HEBERT
HEBERT ASSOC, INC
P.O. BOX 1594 - 1110 W. WISCONSIN AVE
APPLETON, WI 54912-1594
PH 920-734-8373
FAX 920-734-3968
Jim@hebertassoc.com

HIGHWAY COMMISSIONER

AL GEURTS
OUTAGAMIE COUNTY
1313 HOLLAND ROAD
APPLETON, WI 54911
PH 920-832-5674
geurtsaj@co.outagamie.wi.us

GENERAL NOTES

ALL ELEVATIONS ON THIS PROJECT ARE REFERENCED TO THE NATIONAL GEODETIC VERTICAL DATUM OF (NGVD 29)

DISTURBED AREAS WITHIN THE RIGHT OF WAY, EXCEPT THE AREAS WITHIN THE FINISHED SHOULDER POINTS, WILL BE TOPSOILED (SALVAGED OR TOPSOIL) FERTILIZED, SEEDED, AND MULCHED AS DIRECTED BY THE ENGINEER.

EXCAVATION BELOW SUBGRADE (EBS) IS NOT USED IN THE BALANCE YARDAGE AND IS NOT SHOWN IN THE CROSS SECTIONS, BUT IS MEASURED AND PAID FOR AS EXCAVATION COMMON.

LOCATIONS OF UNDERGROUND UTILITIES AS SHOWN ON THE PLANS ARE APPROXIMATE. THERE MAY BE OTHER UTILITY INSTALLATIONS WITHIN THE PROJECT AREA THAT ARE NOT SHOWN.

INLET AND DISCHARGE ELEVATIONS FOR DRAINAGE STRUCTURES SHOWN ON THE PLAN ARE APPROXIMATE AND SHALL BE DETERMINED BY THE ENGINEER IN THE FIELD.

INLET GRATE ELEVATIONS REFERRED TO ON INLET NOTES ARE TO THE EDGE OF PAVEMENT (TO THE FLANGE OF THE CURB).

PRIOR TO ORDERING DRAINAGE PIPE AND STRUCTURES, THE CONTRACTOR WILL VERIFY RELATED DRAINAGE INFORMATION IN THE PLAN WITH THE ENGINEER.

EXPANSION JOINTS TO BE CONSTRUCTED AT ALL RADIUS POINTS IN CURB AND GUTTER OR AT LOCATIONS SHOWN ON THE PLAN.

CURB RADII ARE SHOWN TO FACE OF CURB AND GUTTER.

CURB RADII FOR CONCRETE MEDIAN SLOPED NOSE ARE SHOWN TO THE FLANGE OF THE CURB.

THE EROSION CONTROL FEATURES AS SHOWN ON THE PLANS ARE AT SUGGESTED LOCATIONS. EXACT LOCATIONS WILL BE DETERMINED BY THE ENGINEER IN THE FIELD.

THE FACTOR USED FOR EXPANDING THE FILLS TO COMPUTE THE VOLUME OF MATERIAL IS SHOWN ON THE EARTHWORK TABLES.

TOPSOIL AND SALVAGED TOPSOIL HAVE BEEN COMPUTED BY DIRECT MEASUREMENTS ON THE CROSS SECTIONS PLUS FIVE FEET BEYOND THE TOE OF SLOPE.

IMMEDIATELY AFTER CONSTRUCTION OF ANY INLET, CONTRACTOR SHALL CONSTRUCT THE EROSION CONTROL PROTECTION IN ACCORDANCE WITH THE DETAILS SHOWN IN THE PLANS TO MINIMIZE SEDIMENTATION IN THE INLET AND STORM SEWER.

BOXOUTS SHALL BE PROVIDED IN CONCRETE SIDEWALK BY THE CONTRACTOR FOR SIGN PLACEMENT. THE COST OF THE BOXOUTS SHALL BE INCIDENTAL TO CONCRETE SIDEWALK. LOCATIONS SHALL BE DETERMINED BY THE ENGINEER. SEE CONSTRUCTION DETAILS FOR SIZE OF BOXOUTS.

CURB HEIGHTS AT THE ENDS OF CURB AND GUTTER SHALL BE TAPERED FROM 6 INCHES TO 0 INCHES IN 10 FEET, WHERE APPLICABLE.

SAW CUT LOCATIONS SHOWN ON THE PLAN ARE SUBJECT TO ADJUSTMENT BY THE ENGINEER IN THE FIELD. THE LINE OF SUCH SAW CUTS SHALL BE NEATLY DELINEATED THRU THE ASPHALTIC AND/OR CONCRETE PAVEMENT WITHOUT ANY DAMAGE TO THE REMAINING PORTION OF THE EXISTING PAVEMENT.

DIMENSIONS OF RIPRAP PLACEMENT SHALL BE DETERMINED BY THE ENGINEER IN THE FIELD.

2

2

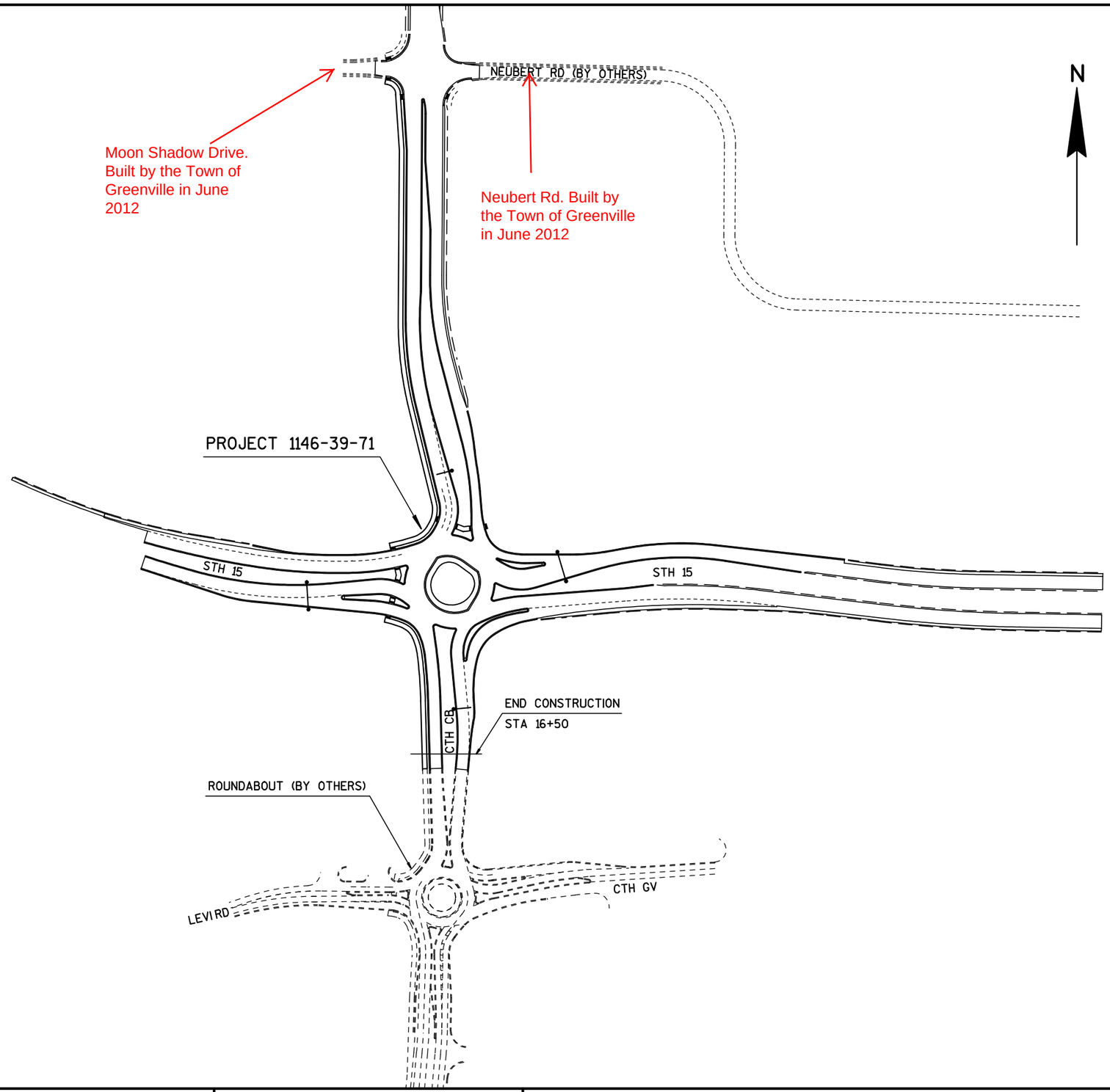

PROJECT NO: 1146-39-71	HWY: STH 15	COUNTY: OUTAGAMIE	PROJECT OVERVIEW	SHEET 3	E

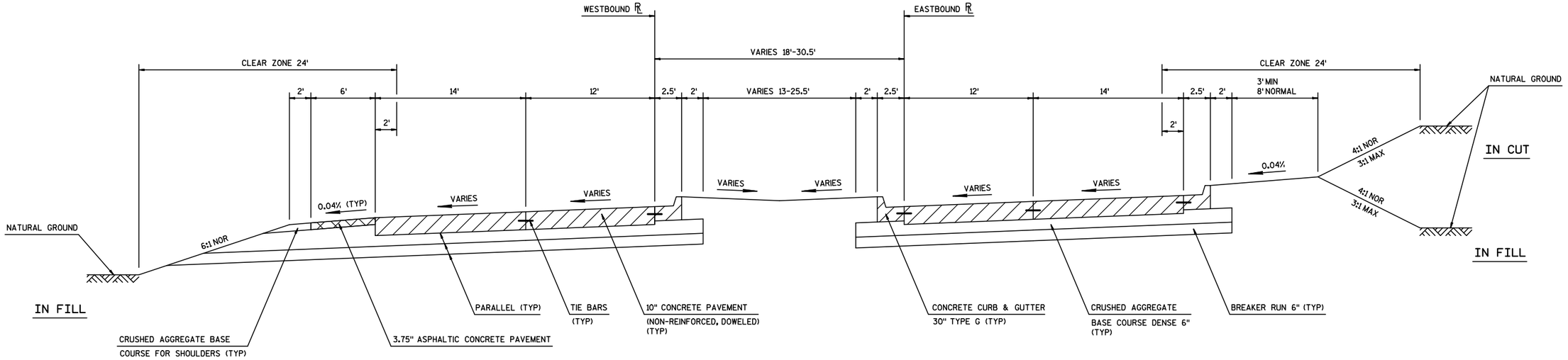

TYPICAL EXISTING SECTION FOR STH 15

STA 164+07.36 TO STA 167+18.42

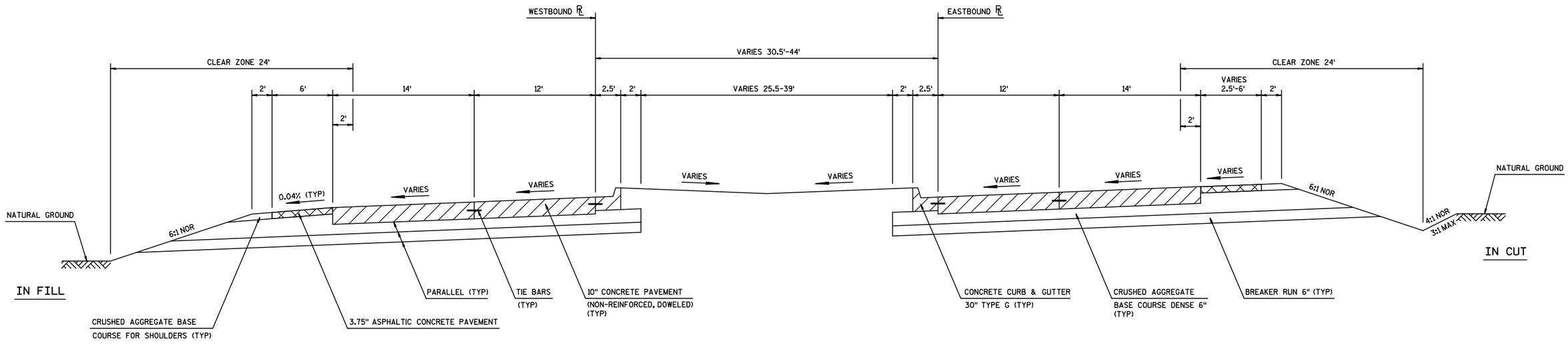

TYPICAL EXISTING SECTION FOR STH 15

STA 167+18.42 TO STA 170+00

PROJECT NO: 1146-39-71	HWY: STH 15	COUNTY: OUTAGAMIE	TYPICAL EXISTING CROSS SECTIONS	SHEET 4	E

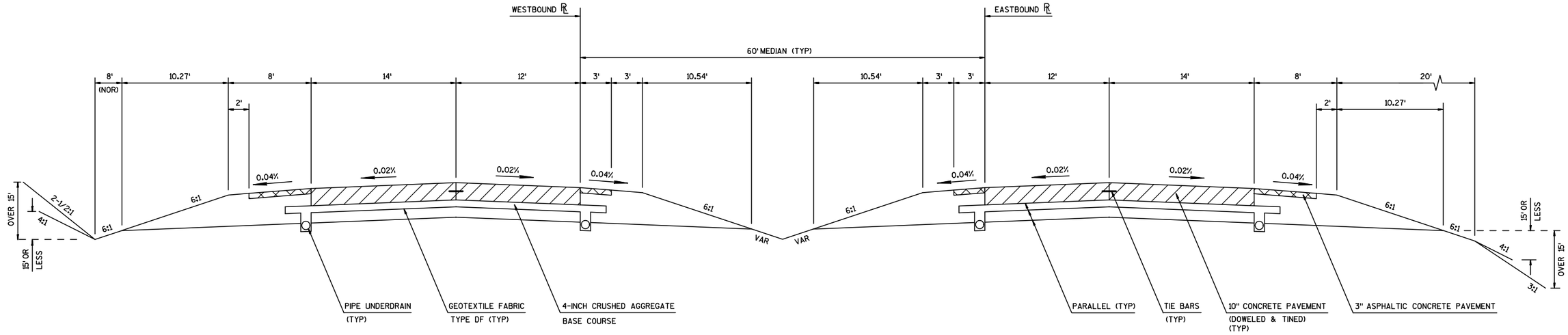

TYPICAL EXISTING SECTION FOR STH 15

STA 178+26 TO STA 192+00

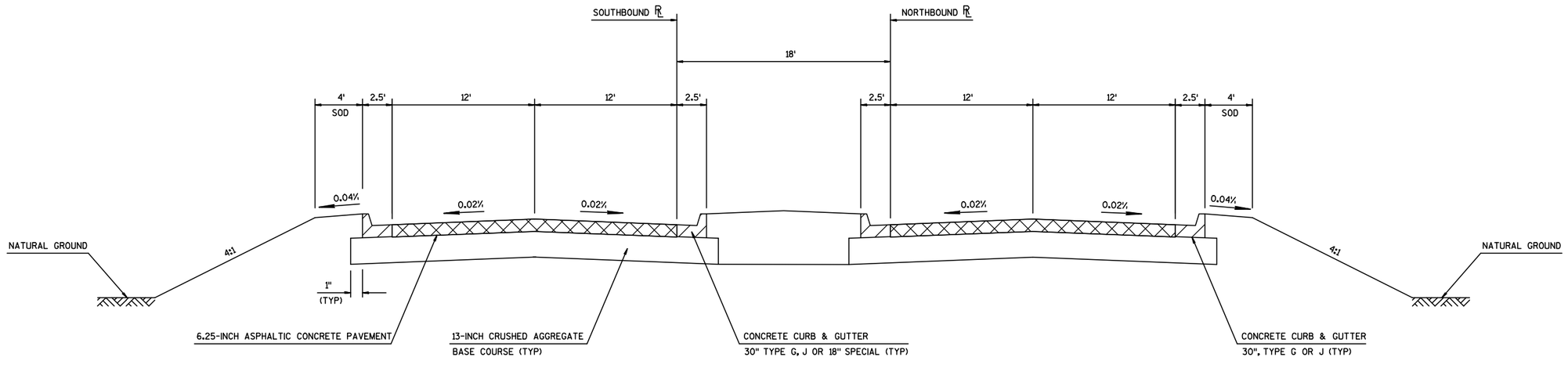

TYPICAL EXISTING SECTION FOR CTH CB

PROJECT NO: 1146-39-71	HWY: STH 15	COUNTY: OUTAGAMIE	TYPICAL EXISTING CROSS SECTIONS	SHEET 5	E

FILE NAME : F:\d3_114639\020301_ts.DGN PLOT DATE : 27-JUL-2011 13:22 PLOT BY : dotmzc PLOT NAME : 020301tsB PLOT SCALE : 10.000000:1.000000

WISDOT/CADDS SHEET 42

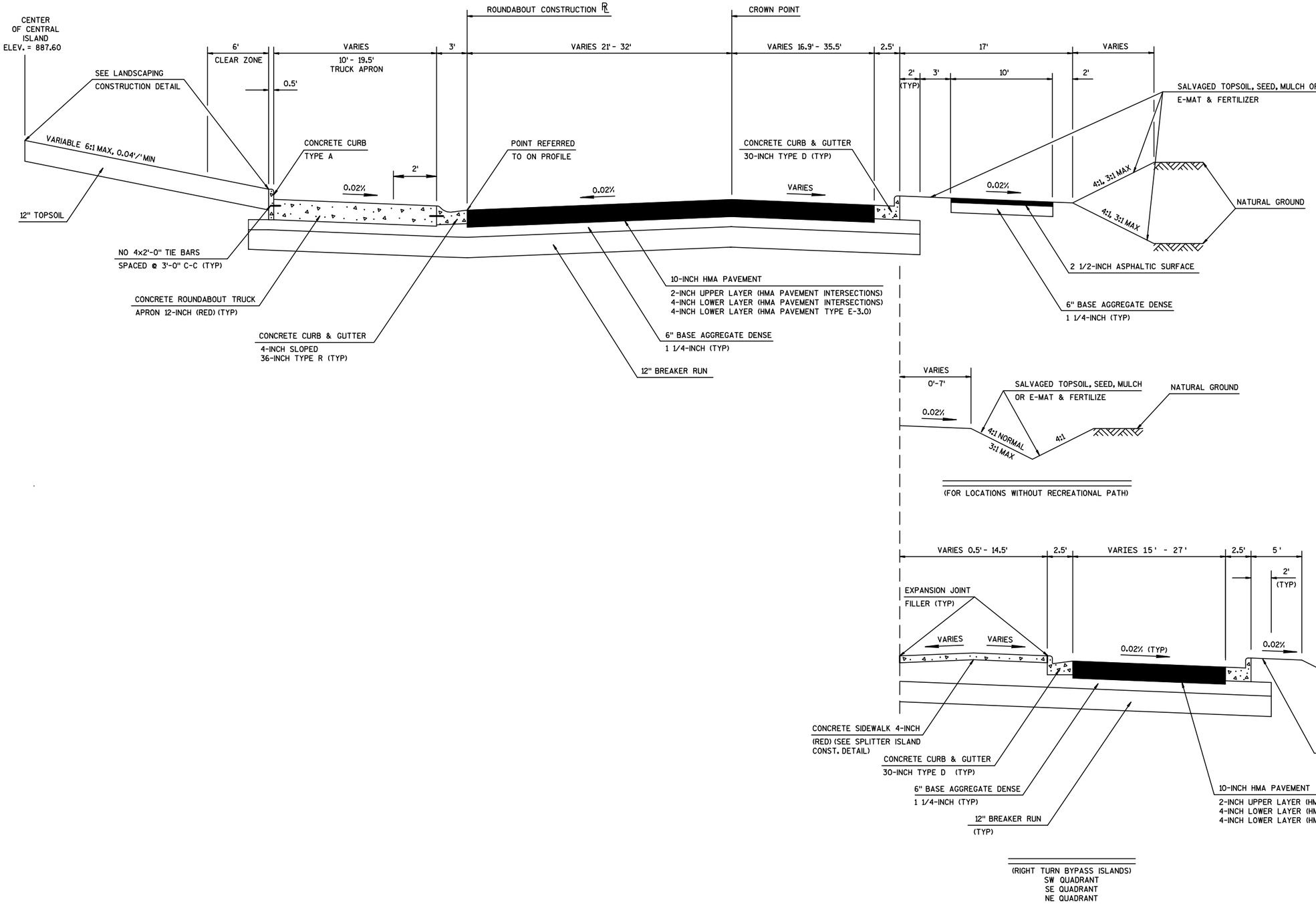

TYPICAL FINISHED HALF SECTION FOR CIRCULATORY ROADWAY

PROJECT NO: 1146-39-71	HWY: STH 15	COUNTY: OUTAGAMIE	TYPICAL FINISHED CROSS SECTIONS	SHEET 6	E

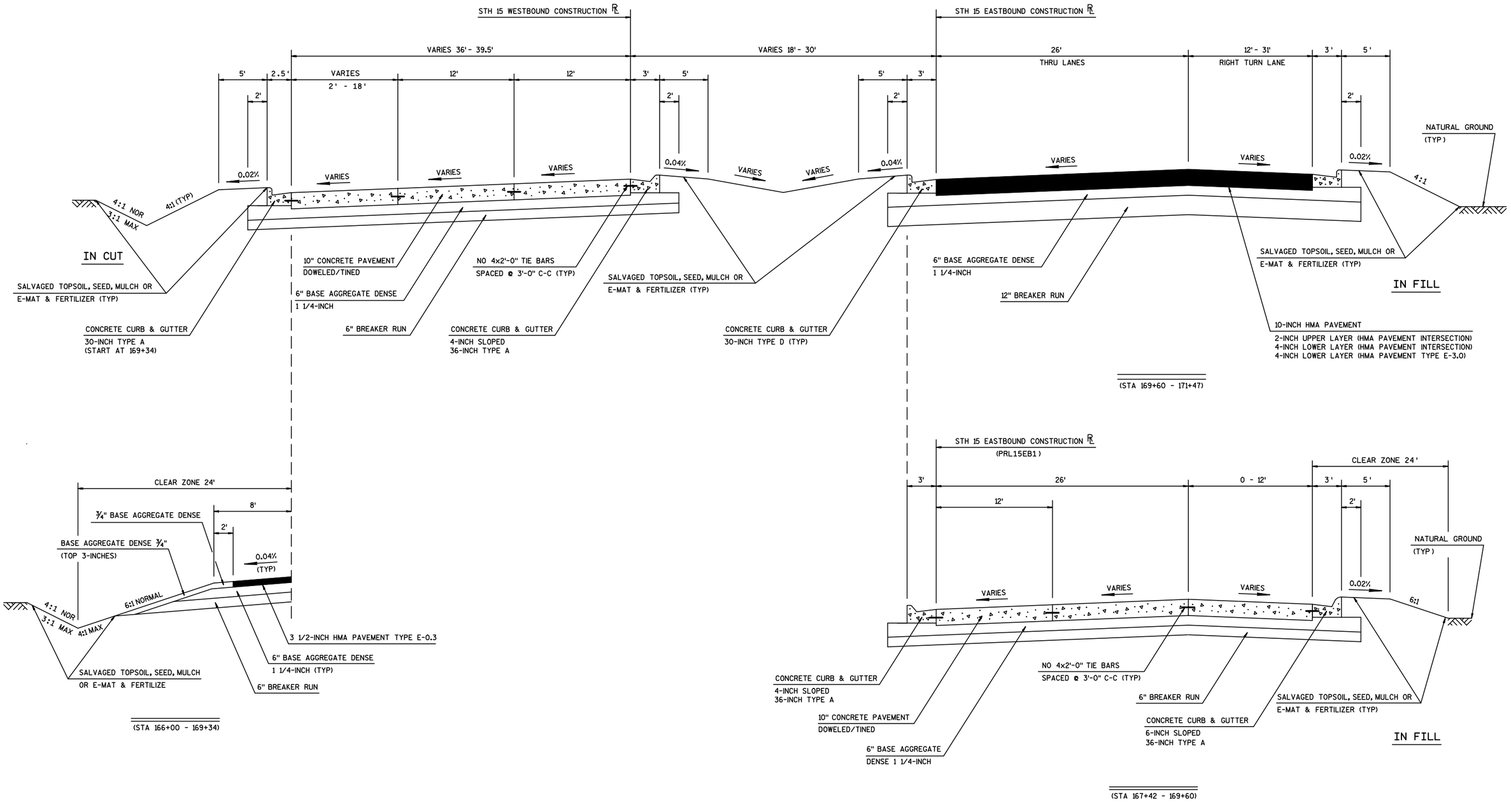

TYPICAL FINISHED SECTION FOR STH 15 (WEST LEG)

STA. 166+00 - STA. 171+47

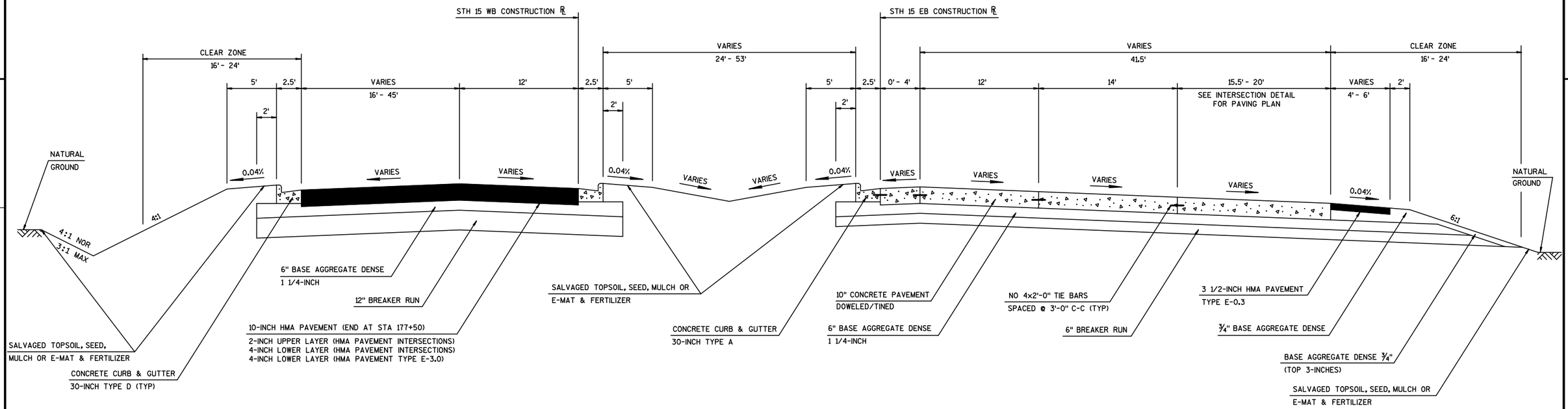

TYPICAL FINISHED SECTION FOR STH 15

STA 176+25 - 178+31

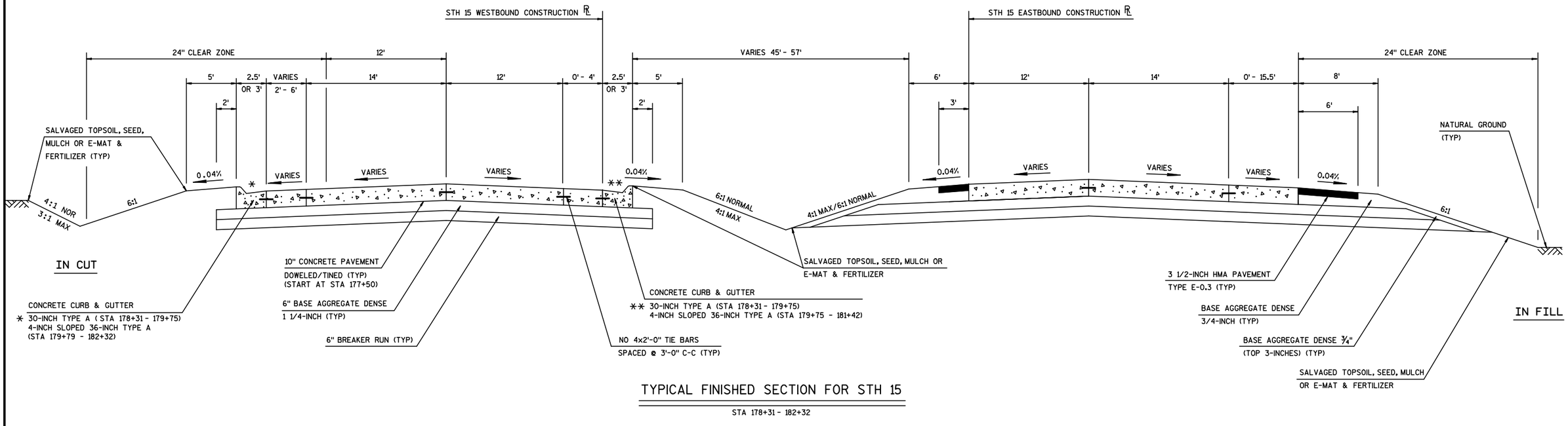

TYPICAL FINISHED SECTION FOR STH 15

STA 178+31 - 182+32

PROJECT NO: 1146-39-71	HWY: STH 15	COUNTY: OUTAGAMIE	TYPICAL FINISHED CROSS SECTIONS	SHEET 8	E

2

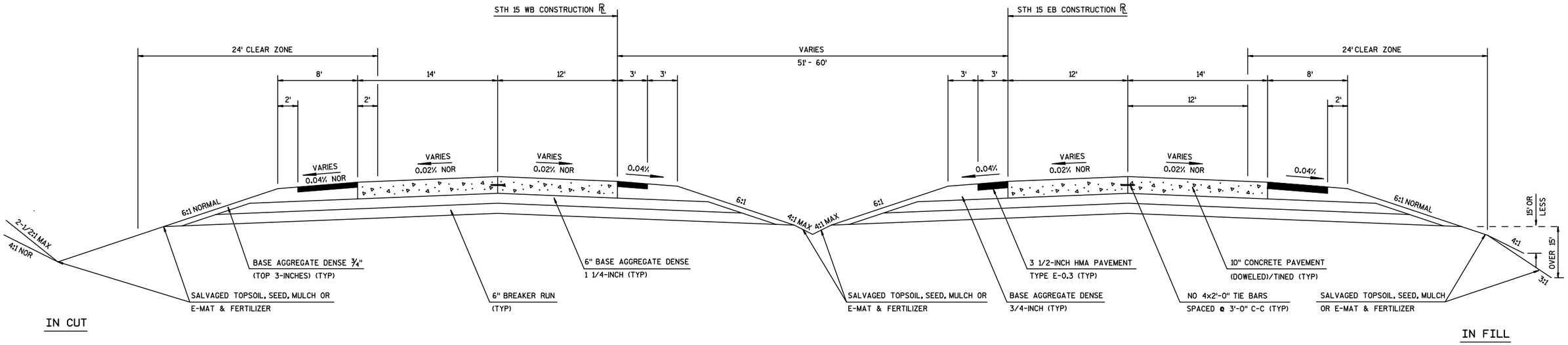

TYPICAL FINISHED CROSS SECTION FOR STH 15

STA 182+32 TO STA 187+75

PROJECT NO: 1146-39-71	HWY: STH 15	COUNTY: OUTAGAMIE	TYPICAL FINISHED CROSS SECTIONS	SHEET 9	E

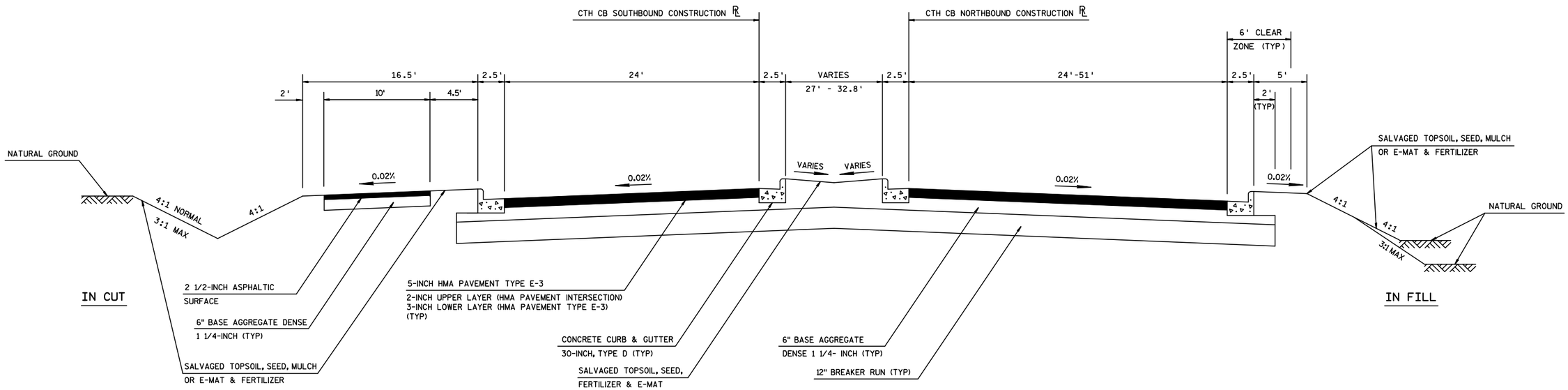

TYPICAL FINISHED SECTION FOR COUNTY CB

STA. 16+50 - STA. 18+80

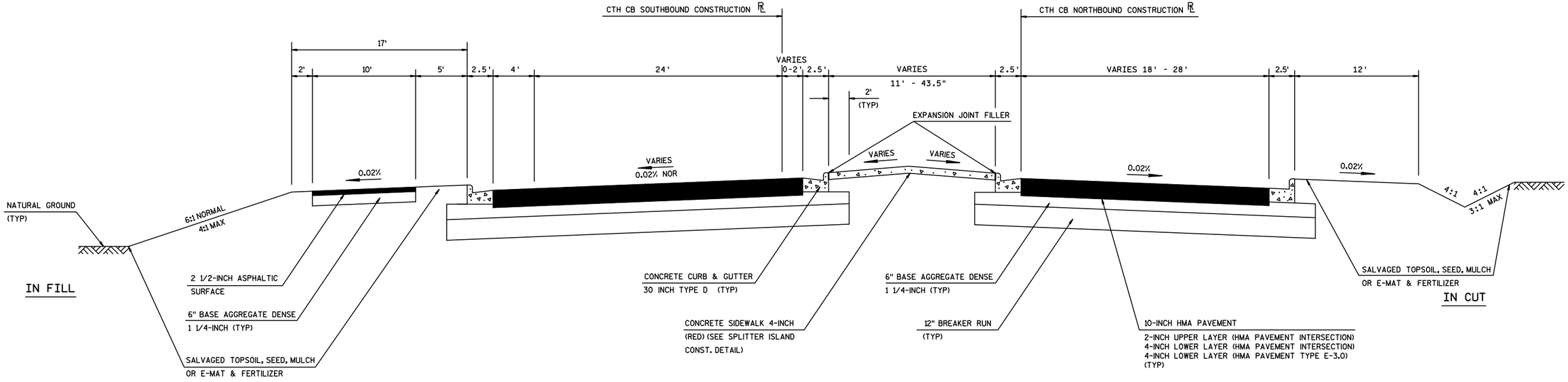

TYPICAL FINISHED SECTION FOR COUNTY CB (NORTH EXTENSION)

STA. 21+54.6 - STA. 23+00

PROJECT NO: 1146-39-71	HWY: STH 15	COUNTY: OUTAGAMIE	TYPICAL FINISHED CROSS SECTIONS	SHEET 10	E

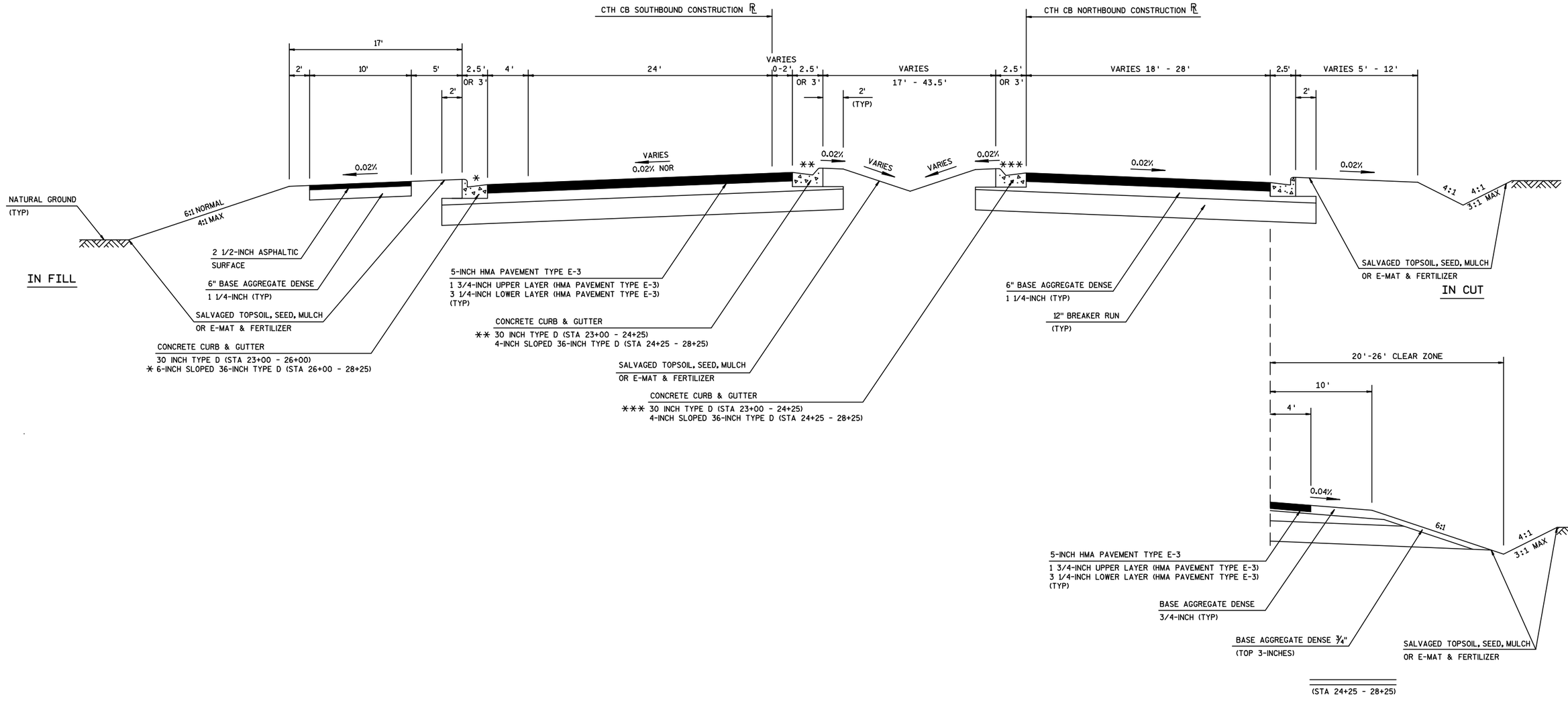

TYPICAL FINISHED SECTION FOR COUNTY CB (NORTH EXTENSION)

STA. 23+00 - STA. 28+25

PROJECT NO: 1146-39-71	HWY: STH 15	COUNTY: OUTAGAMIE	TYPICAL FINISHED CROSS SECTIONS	SHEET 11 E

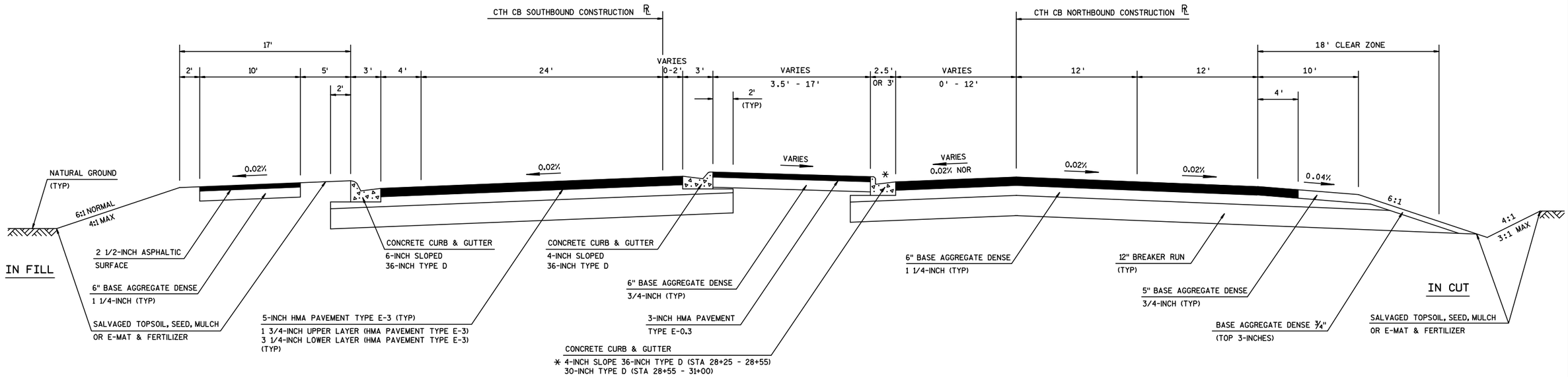

TYPICAL FINISHED SECTION FOR COUNTY CB (NORTH EXTENSION)

STA. 28+25 - STA. 31+00

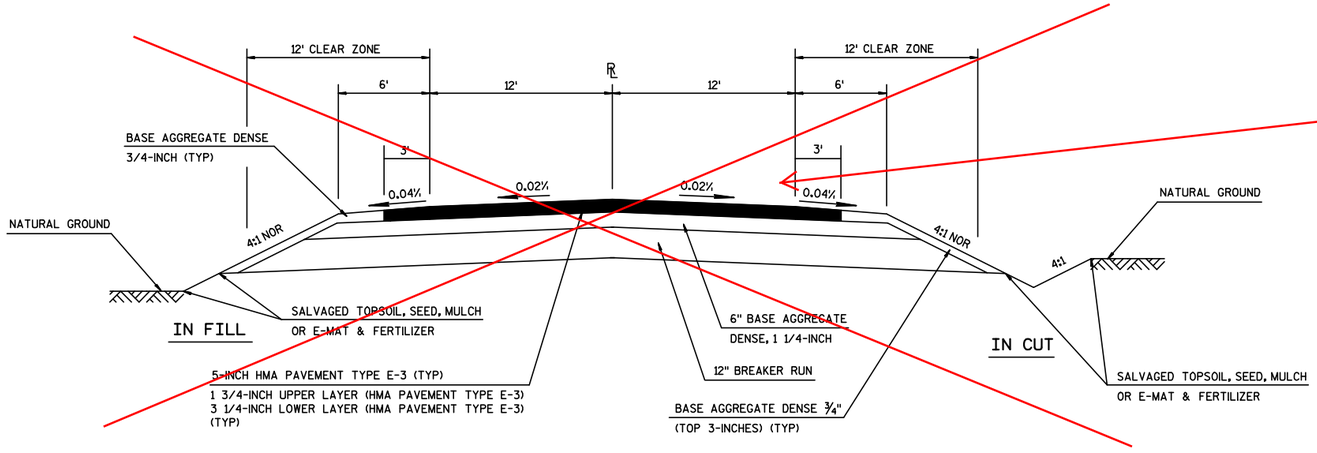

see Sheet 12A for changes/additions for Neubert Rd. and Moon Shadow Drive Typical finished section

TYPICAL FINISHED SECTION NEUBERT RD

STA. 0+25 - STA. 2+50

PROJECT NO: 1146-39-71	HWY: STH 15	COUNTY: OUTAGAMIE	TYPICAL FINISHED CROSS SECTIONS	SHEET 12	E

STANDARD DETAILS

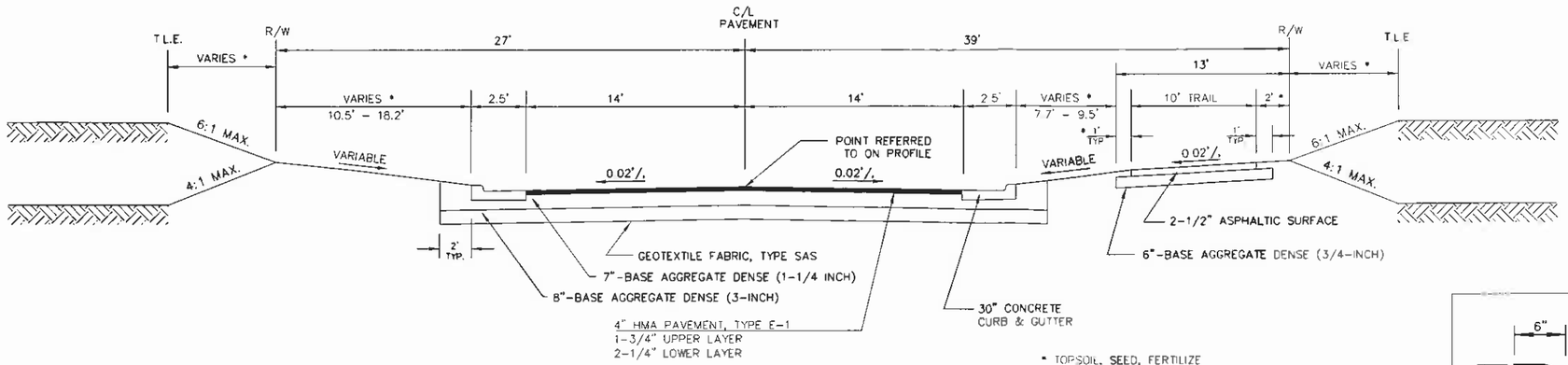

1 / C5.1 TYPICAL STREET SECTION

NTS

MOON SHADOW DRIVE STA. 23+59 - 37+50

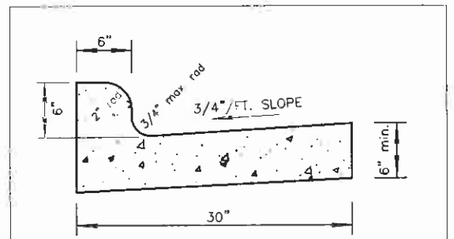

2 / C5.1 30" CONCRETE CURB & GUTTER

NTS

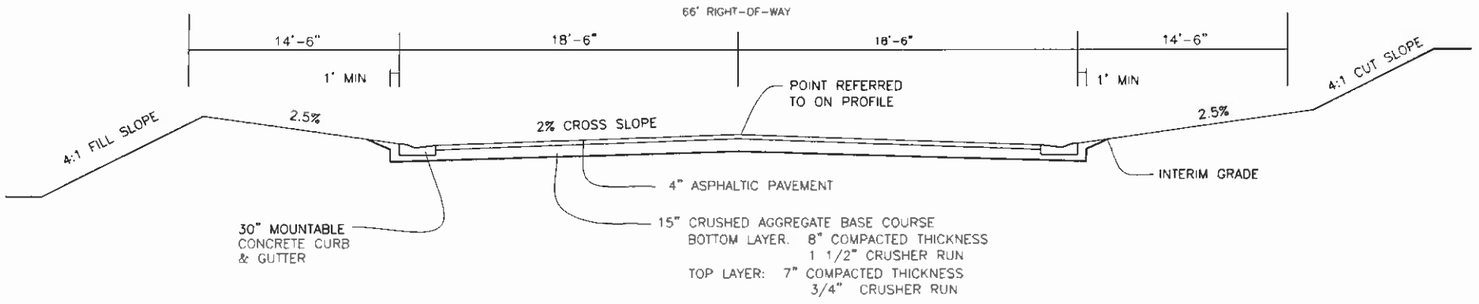

3 / C5.1 TYPICAL STREET SECTION

NTS

NEUBERT ROAD STA. 37+50 - 48+11

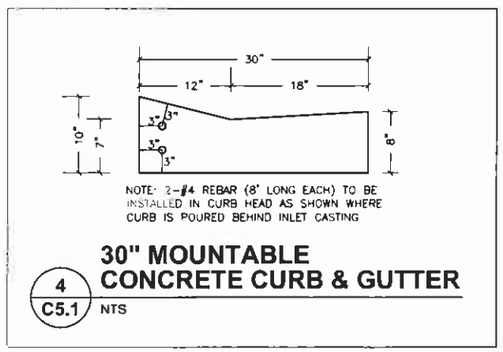

NOTE: 2-#4 REBAR (8' LONG EACH) TO BE INSTALLED IN CURB HEAD AS SHOWN WHERE CURB IS POURED BEHIND INLET CASTING

4 / C5.1 30" MOUNTABLE CONCRETE CURB & GUTTER

NTS

GENERAL NOTES

1. ALL CONSTRUCTION SHALL BE DONE IN ACCORDANCE WITH THE DETAILS IN THE PLANS, THE SPECIAL PROVISIONS INCLUDED IN THE CONTRACT DOCUMENTS, AND THE STATE OF WISCONSIN DEPARTMENT OF TRANSPORTATION STANDARD SPECIFICATIONS FOR HIGHWAY AND STRUCTURE CONSTRUCTION" 2003 EDITION (REFERRED TO AS THE "STANDARD SPECIFICATIONS"), INCLUDING ALL SUPPLEMENTS, EXCEPT PART 1, WHICH IS HEREBY DELETED.
2. THE CONTRACTOR SHALL COORDINATE ACTIVITIES WITH APPLICABLE UTILITY COMPANIES AND INSTITUTIONALLY OWNED UTILITIES.
3. SAW CUTTING OF PAVEMENTS, SHOULDERS, ETC. SHALL BE TO FULL DEPTH AND SHALL RESULT IN A CLEAN, STRAIGHT EDGE OF THE PORTION REMAINING. ALL WORK ASSOCIATED WITH SAW CUTTING SHALL BE INCLUDED IN THE BID.
4. THE CONTRACTOR SHALL MAINTAIN ACCESS TO ALL DELIVERY LOCATIONS.
5. THE CONTRACTOR SHALL BE RESPONSIBLE FOR DISPOSING OF ALL SURPLUS MATERIALS RELATED TO THE JOB AFTER COMPLETING THE PAVING PROJECT.
6. THE CONTRACTOR SHALL PROTECT AND CAREFULLY PRESERVE ALL SECTION OR SUBSECTION MONUMENTS OR PROPERTY OR REFERENCE MARKERS UNTIL THE OWNER, HIS AGENT OR AN AUTHORIZED SURVEYOR HAS WITNESSED OR OTHERWISE REFERENCED THEIR LOCATIONS.
7. THE CONTRACTOR SHALL BE RESPONSIBLE FOR THE PROTECTION OF ALL UNDERGROUND OR SURFACE UTILITIES EVEN THOUGH THEY MAY NOT BE SHOWN ON THE PLANS. ANY UTILITY THAT IS DAMAGED DURING CONSTRUCTION SHALL BE REPAIRED TO THE SATISFACTION OF THE OWNER OR REPLACED. THIS WORK SHALL BE PERFORMED PER THE STANDARD SPECIFICATIONS.
8. STORM SEWER CULVERTS SHALL BE BACKFILLED IN ACCORDANCE WITH THE STANDARD SPECIFICATIONS.
9. ALL AGGREGATE USED ON THIS PROJECT SHALL BE CRUSHED MATERIAL.
10. THE CONTRACTOR SHALL NOTIFY ALL LOCAL EMERGENCY SERVICES IN WRITING 48 HOURS PRIOR TO ANY PLANNED STREET CLOSURES. EMERGENCY ACCESS SHALL BE ALLOWED AT ALL TIMES.
11. THE CONTRACTOR SHALL REPLACE ALL STREET SIGNS REMOVED DURING CONSTRUCTION AS NEAR AS POSSIBLE TO THEIR ORIGINAL LOCATION, OR AS SHOWN ON THE PLANS.
12. ALL POSTS, RAILROAD TIES, FENCING, LANDSCAPING ITEMS AND SPECIAL CONCRETE OR BRICK MAILBOX SUPPORTS IN CONFLICT WITH THE PROPOSED IMPROVEMENTS SHALL BE INCLUDED IN PART OF EARTH EXCAVATIONS UNLESS OTHERWISE NOTED IN THE PLANS.
13. DRIVEWAY PAVEMENT REMOVAL AND SIDEWALK REMOVAL: THIS WORK SHALL ALSO INCLUDE REMOVING AND DISPOSING OF ANY ADDITIONAL MATERIAL REQUIRED TO ESTABLISH THE PROPOSED SUBGRADE ELEVATION AS SHOWN ON THE PLANS.
14. THE QUANTITIES SHOWN ARE THE ENGINEERS BEST ESTIMATE OF WORK TO BE PERFORMED. THE CONTRACTOR IS RESPONSIBLE TO DETERMINE THE ACTUAL QUANTITIES NECESSARY TO COMPLETE THE WORK AS PROPOSED. THE CONTRACTOR SHALL MAKE NO CLAIM FOR DAMAGE, ANTICIPATED PROFITS, OR OTHERWISE ON ACCOUNT OF ANY DIFFERENCES WHICH MAY BE FOUND BETWEEN THE WORK ACTUALLY PERFORMED AND THE ESTIMATED QUANTITIES SHOWN.

Martenson & Eisele, Inc.
Planning
Environmental
Surveying
Engineering
Architecture
1377 Midway Road
Menasha, WI 54952
www.martenson-eisele.com
info@martenson-eisele.com
920.731.0381 1.800.236.0381

DRAWN BY: FAE DATE:
CHECKED: MSS
APPROVED: SCM
REVISION:
NO

STANDARD DETAILS
MOON SHADOW DR / NEUBERT RD
TOWN OF GREENVILLE, OUTAGAMIE COUNTY, WISCONSIN

SCALE: NONE
DATE: 10-12-11
COMPUTER FILE: 156905gcde
DRAWING NO.: C5.1

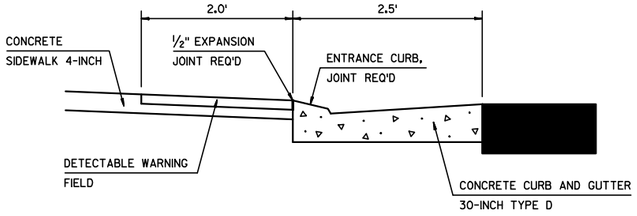

SECTION A-A

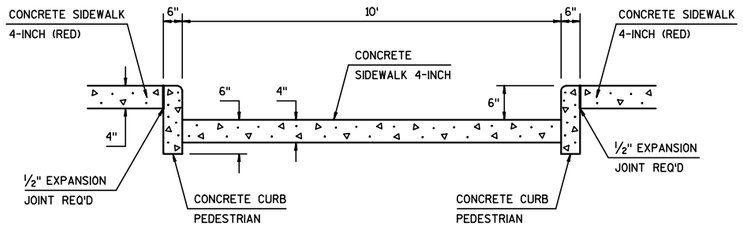

SECTION B-B

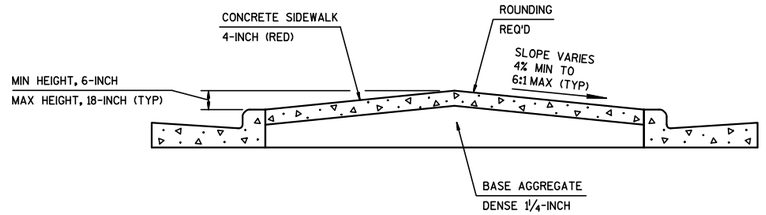

SECTION C-C

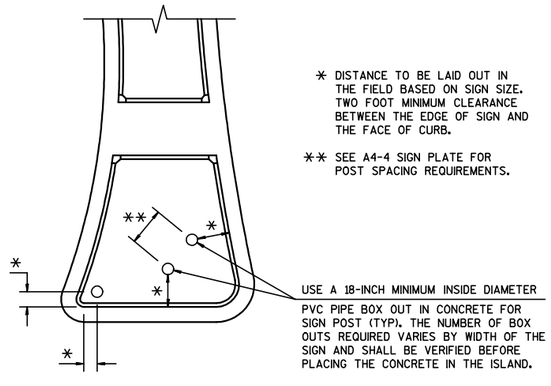

ISLAND SIGN LOCATION DETAIL (TYP)

NOTIFY THE REGIONAL TRAFFIC UNIT AT 920-492-5653 A MINIMUM OF TWO WEEKS PRIOR TO THE NEED FOR SIGN PLACEMENT TO ALLOW FOR STAKING OF ANY PERMANENT SIGNING REQUIRED ON THE PROJECT.

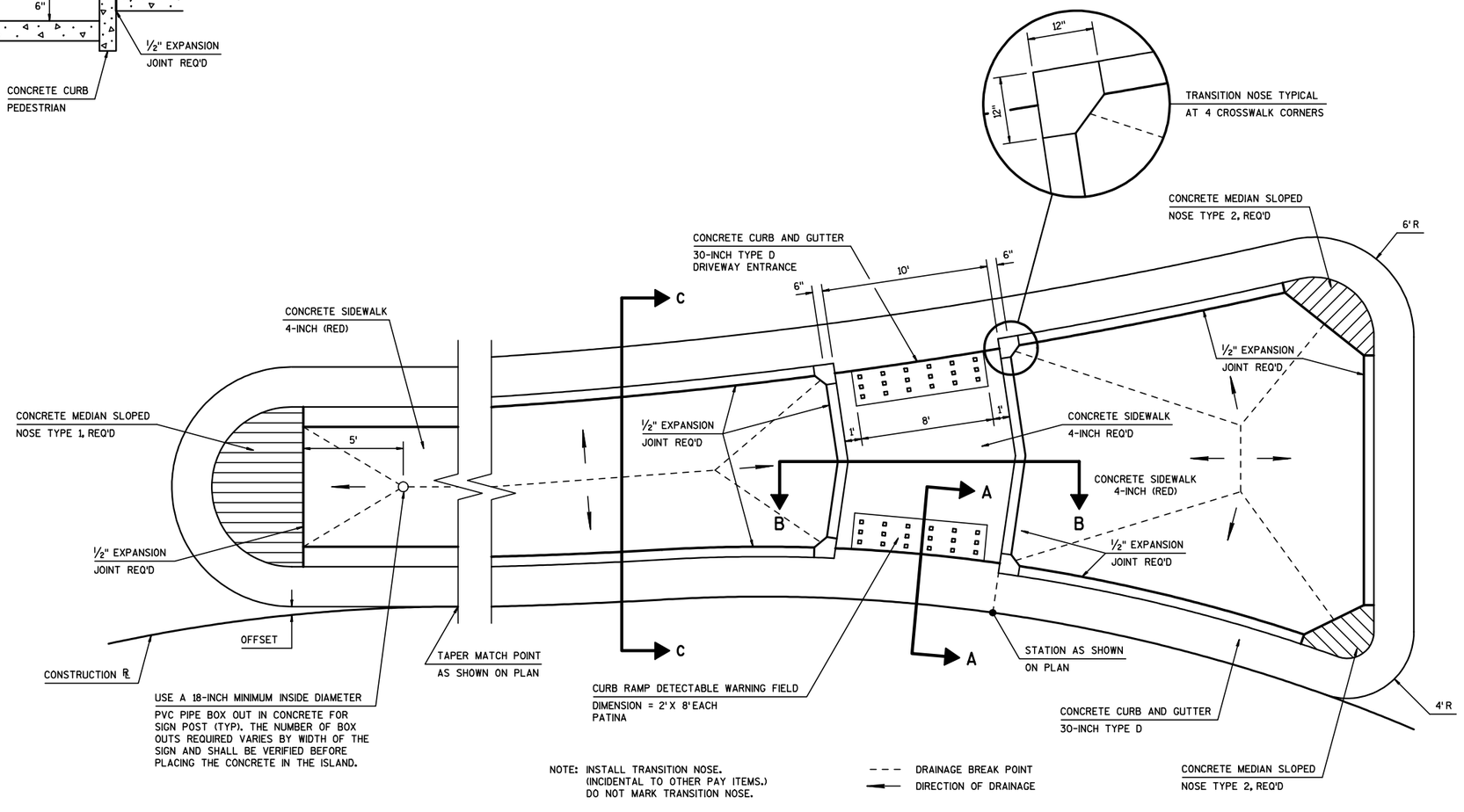

SPLITTER ISLAND DETAIL

PROJECT NO: 1146-39-71	HWY: STH 15	COUNTY: OUTAGAMIE	CONSTRUCTION DETAILS	SHEET 13	E

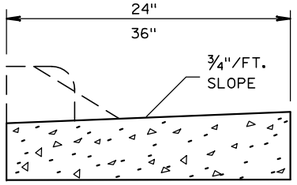

SECTION A-A

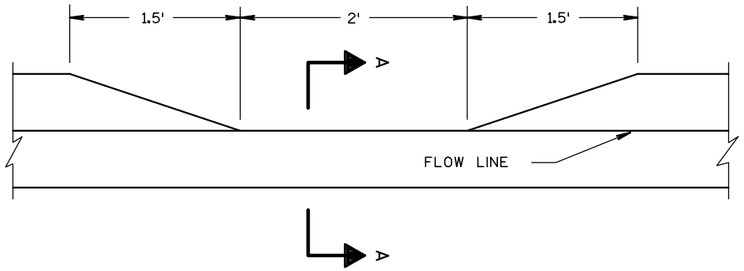

DETAIL OF CURB HEAD DEPRESSION FOR DRAINAGE AT CURB & GUTTER SECTION

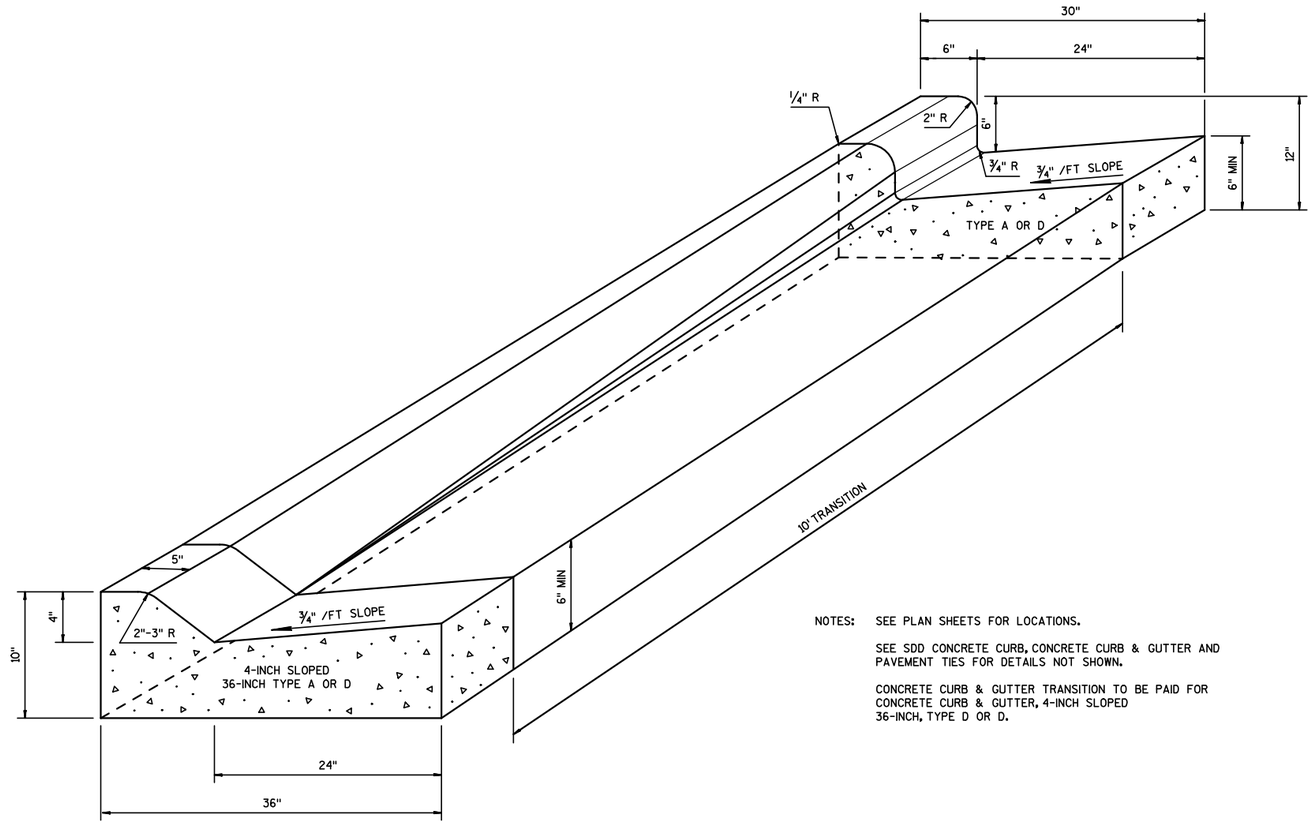

NOTES: SEE PLAN SHEETS FOR LOCATIONS.

SEE SDD CONCRETE CURB, CONCRETE CURB & GUTTER AND PAVEMENT TIES FOR DETAILS NOT SHOWN.

CONCRETE CURB & GUTTER TRANSITION TO BE PAID FOR CONCRETE CURB & GUTTER, 4-INCH SLOPED 36-INCH, TYPE D OR D.

CONCRETE CURB & GUTTER TRANSITION DETAIL

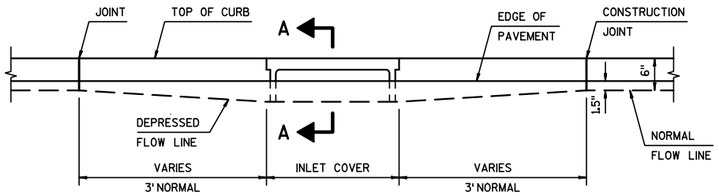

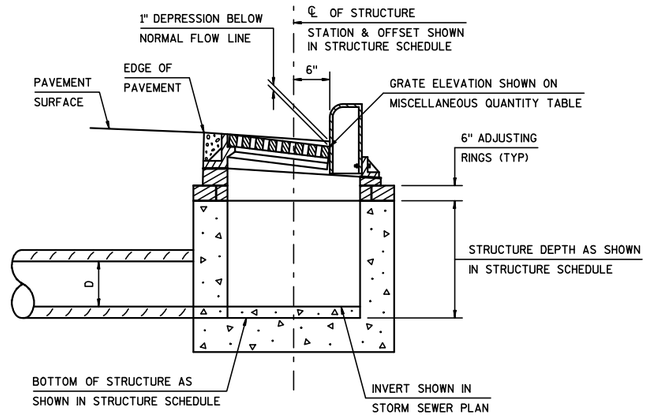

SECTION A-A

DETAIL OF CURB AND GUTTER AT INLETS

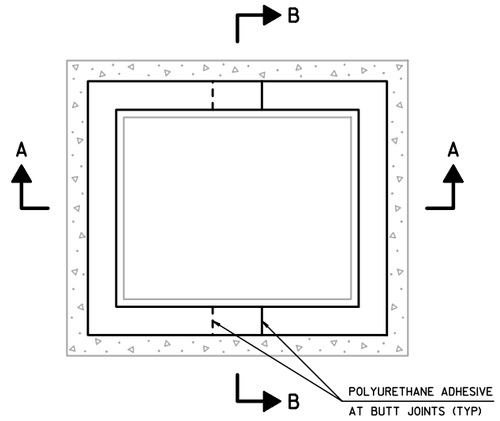

PLAN VIEW

NOTE: ALL CUTS MADE TO RUBBER ADJUSTMENT RINGS WILL BE PERPENDICULAR AND PROVIDE A TIGHT JOINT.

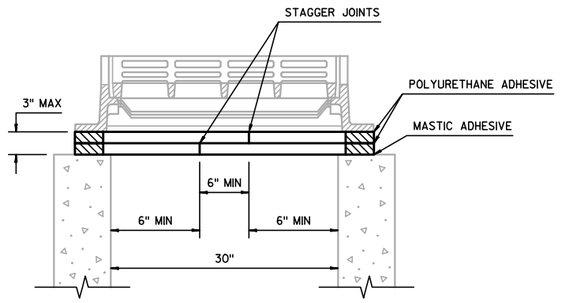

SECTION A-A

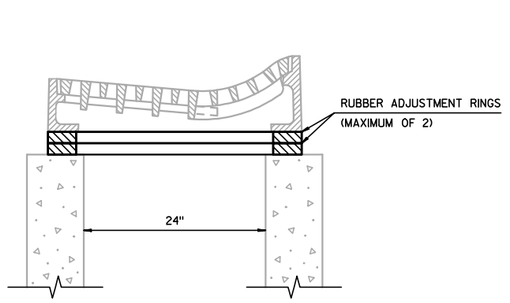

SECTION B-B

RUBBER RING CUTTING DETAIL FOR INLET TYPE 2, SPECIAL

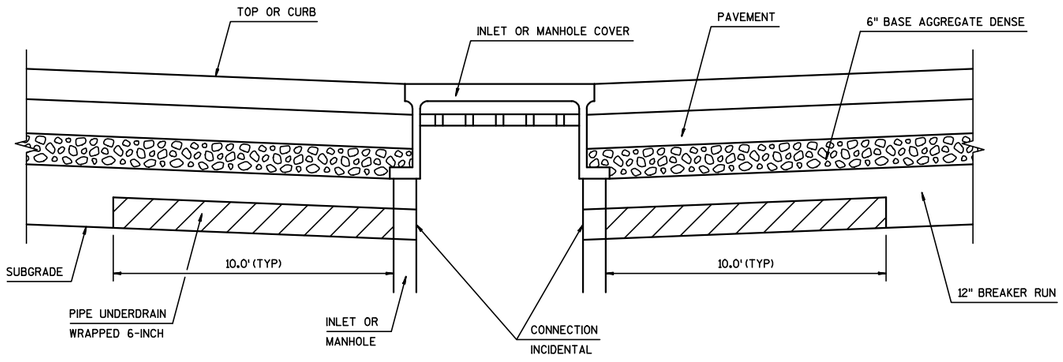

PIPE UNDERDRAIN DETAIL

PROJECT NO: 1146-39-71	HWY: STH 15	COUNTY: OUTAGAMIE	CONSTRUCTION DETAILS	SHEET 15	E

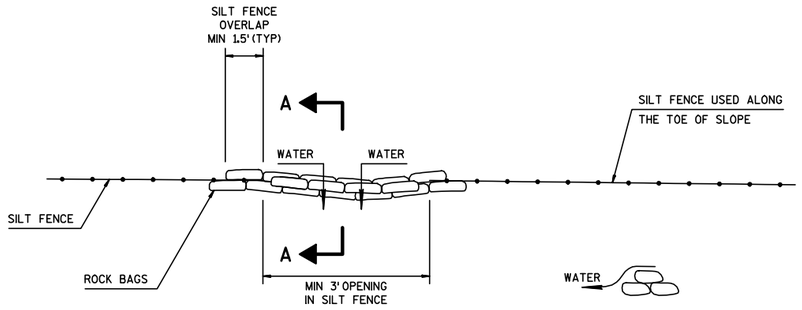

SECTION A-A

TOP VIEW

ROCK BAGS USED FOR SILT FENCE RELIEF DETAIL

PAID AS ROCK BAGS

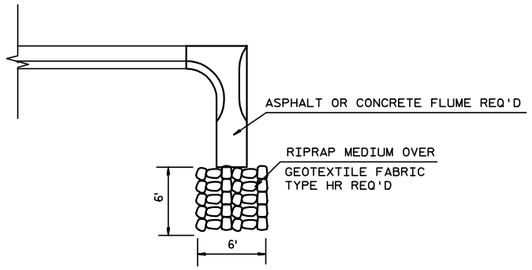

RIPRAP MEDIUM AT ASPHALT FLUME

(SEE MISCELLANEOUS QUANTITIES FOR LOCATIONS

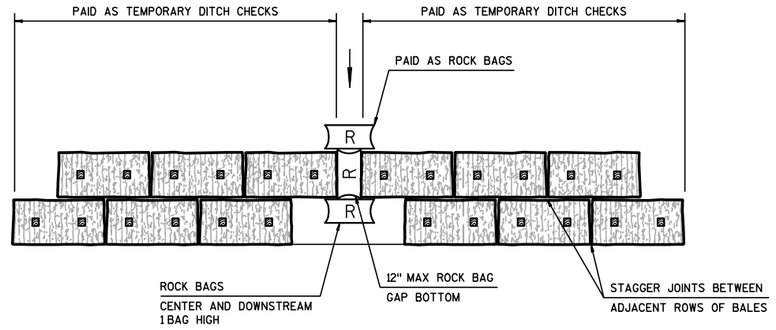

PLAN VIEW

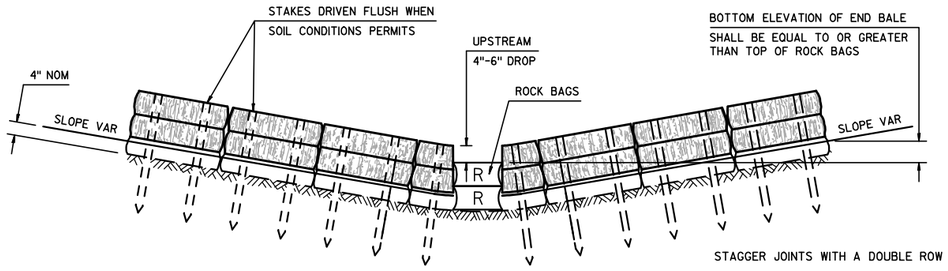

FRONT ELEVATION

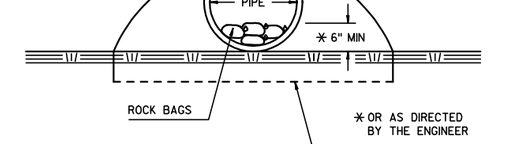

END VIEW

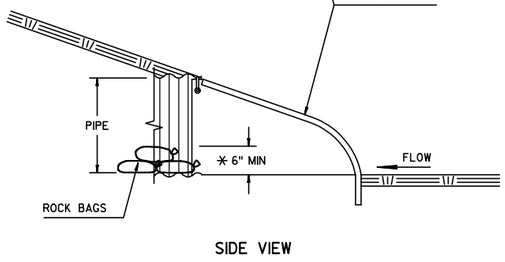

SIDE VIEW

CULVERT PIPE CHECKS

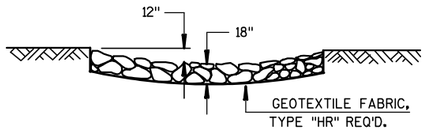

SECTION A-A

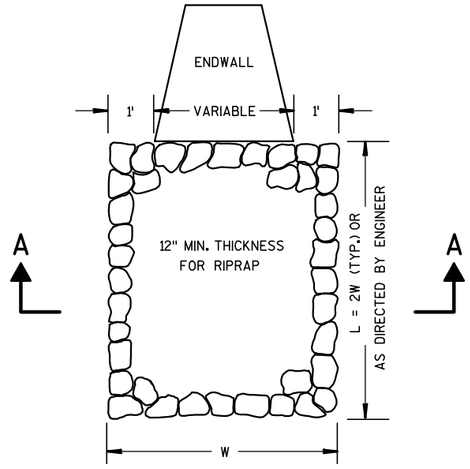

RIPRAP MEDIUM TREATMENT AT CULVERTS

GENERAL NOTES

DETAILS OF CONSTRUCTION, MATERIALS AND WORKMANSHIP NOT SHOWN ON THIS DRAWING SHALL CONFORM TO THE PERTINENT REQUIREMENTS OF THE STANDARD SPECIFICATIONS.

TEMPORARY DITCH CHECKS WITH ROCK BAG RELIEF

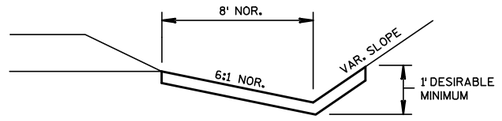

EROSION MAT DETAIL FOR DITCHES

PROJECT NO: 1146-39-71	HWY: STH 15	COUNTY: OUTAGAMIE	CONSTRUCTION DETAILS	SHEET 16	E

2

2

N

REMOVE & REPLACE
EXISTING ASPHALT SHOULDER
(STA 163+83 TO 166+00)

WB EXIT ALIGNMENT

MATCH EXISTING
SAW CUT REQ'D

EXISTING R/W

SHOULDER LINE

CONC C & G
4-INCH SLOPED
30-INCH TYPE G (REVERSE PAN)
STA 167+00 - 167+42

SALVAGED TOPSOIL, SEED, MULCH
OR E-MAT & FERTILIZER

CONC C & G
4-INCH SLOPED
36-INCH TYPE A
STA 167+42 - 172+46

10-INCH DOWELED CONC PAVT
STA 167+00 - 172+46

PAVED SHOULDER

SLOPE INTERCEPTS

EBS area 1' deep

STH 15 WB

PAVT JOINT

164 165 165 166 166 167 168 168 169 169

PRIMARY ALIGNMENT
FOR X-SECTIONS

BEGIN PROJECT
STA 167+18 (EB STH 15)

EXISTING R/W

START TAPER
STA 500+06

STH 15 EB

MATCH EXISTING
SAW CUT REQ'D

CONC C & G
4-INCH SLOPED
30-INCH TYPE G
STA 167+18 - 167+48

CONC C & G
6-INCH SLOPED
30-INCH TYPE G
STA 500+00 - 500+30

CONC C & G
6-INCH SLOPED
36-INCH TYPE A
STA 500+30 - 502+98

CONC C & G
4-INCH SLOPED
36-INCH TYPE A
STA 167+48 - 170+07

10-INCH DOWELED CONC PAVT
STA 167+18 - 170+07

501 502

SLOPE INTERCEPTS

PAVT JOINT

LOCATION MAP

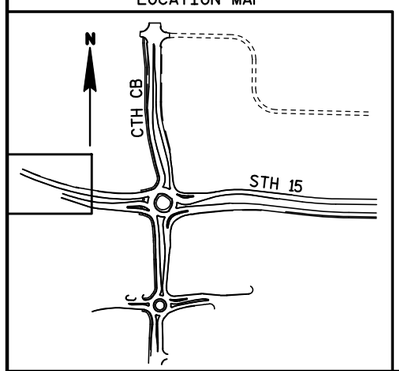

PROJECT NO: 1146-39-71	HWY: STH 15	COUNTY: OUTAGAMIE	PLAN DETAILS	SHEET 17 E

2

LEGEND

CONCRETE SIDEWALK 4-INCH (RED)

* CONC MEDIAN SLOPED NOSE TYPE 2

CONC MEDIAN SLOPED
NOSE TYPE 1

10-INCH DOWELED/TINED
CONC PAVT
STA 167+00 - 172+46

CONC C & G
30-INCH TYPE A
STA 600+00 - 603+00

CONC C & G
30-INCH TYPE D
STA 172+46 - 172+71

CONC C & G
30-INCH TYPE D
STA 603+00 - 608+37

CONC CURB
TYPE A

PRIMARY ALIGNMENT
FOR X-SECTIONS

SALVAGED TOPSOIL, SEED, MULCH
OR E-MAT & FERTILIZER

PAVED SHOULDER

ASPHALTIC FLUME

CONC C & G
4-INCH SLOPED
36-INCH TYPE A
STA 167+42 - 172+46

WB EXIT ALIGNMENT

SEE SPLITTER ISLAND
CONSTRUCTION DETAIL

CONC C & G
4-INCH SLOPED
36-INCH TYPE R

R/W LINE

EXISTING R/W

SLOPE INTERCEPTS

END FULL LANE
STA 169+32

MULTI USE PATH

CROWN POINT

CTH CB SB

CTH CB NB

STH 15 WB

STH 15 EB

PAVT JOINT

END CONCRETE PAVEMENT

EBS areas 0.5' deep

SEE PLANTING DETAIL

END TAPER
STA 169+44.3

CONC C & G
6-INCH SLOPED
36-INCH TYPE A
STA 500+30 - 502+50

10-INCH HMA PAVT INTERSECTIONS
STA 170+07 - 172+84

OVERHEAD
SIGN SUPPORT

CONC C & G
4-INCH SLOPED
36-INCH TYPE A
STA 167+48 - 169+60

10-INCH DOWELED/TINED
CONC PAVT
STA 167+42 - 169+60

CONC C & G
30-INCH TYPE D
STA 502+50 - 509+19

CONC C & G
30-INCH TYPE D
STA 169+60 - 172+85

CONC C & G
30-INCH TYPE D

TYPE 2 CURB
RAMP (TYP)

CONC ROUNDABOUT TRUCK
APRON 12-INCH (RED)

HMA PAVT INTERSECTIONS
CIRCULATORY RDWY

2.5-INCH ASPHALTIC
SURFACE (TYP)

PRIMARY ALIGNMENT
FOR X-SECTIONS

LOCATION MAP

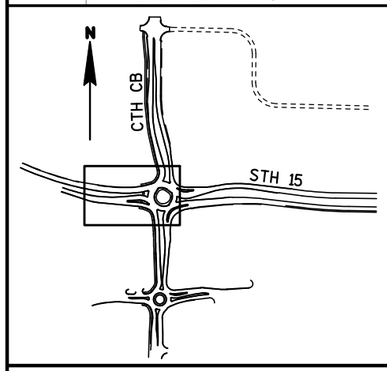

N

2

PROJECT NO: 1146-39-71	HWY: STH 15	COUNTY: OUTAGAMIE	PLAN DETAILS	SHEET 18 E

2

LEGEND

CONCRETE SIDEWALK 4-INCH (RED)

* CONC MEDIAN SLOPED NOSE TYPE 2

N

OVERHEAD SIGN SUPPORT

CONC C & G
30-INCH TYPE D
STA 654+91 - 660+65

10-INCH HMA PAVT INTERSECTIONS
STA 174+70 - 177+50

CONC C & G
30-INCH TYPE D
STA 174+70 - 177+50

CONC C & G
30-INCH TYPE A
STA 652+80 - 654+91

CONC C & G
30-INCH TYPE A
STA 177+50 - 179+61

10-INCH DOWELED/TINED
CONC PAVT
(STA 177+50 - 187+94)

WB APPROACH ALIGNMENT

CONC C & G
4-INCH SLOPED
36-INCH TYPE A
STA 650+00 - 652+80

CONC C & G
4-INCH SLOPED
36-INCH TYPE A
STA 179+61 - 181+42

2

CONC MEDIAN SLOPED
NOSE TYPE 1

CONC C & G
30-INCH TYPE D

R/W LINE

EXISTING R/W

SLOPE INTERCEPTS

START TAPER
652+80

START CONCRETE
PAVEMENT 177+50

STH 15 WB

START TAPER
STA 179+61

PAVT JOINT/
CROWN POINT

EBS area 1' deep

EBS area 1' deep

SHOULDER LINE

EBS area 1' deep

STH 15 EB

SHOULDER LINE

ASPHALTIC FLUME
(TYP)

10-INCH DOWELED/TINED
CONC PAVT
(STA 175+59- 188+00)

PAVED SHOULDER

PRIMARY ALIGNMENT
FOR X-SECTIONS

PAVT JOINT

START CONCRETE
PAVEMENT 176+91

SALVAGED TOPSOIL, SEED, MULCH
OR E-MAT & FERTILIZER

SLOPE INTERCEPTS

START CONCRETE
PAVEMENT 175+59

CONC C & G
30-INCH TYPE A
STA 175+59 - 178+30

10" HMA PAVT INTERSECTIONS

SEE SPLITTER ISLAND
CONSTRUCTION DETAIL

EXISTING R/W

CONC C & G
30-INCH TYPE D
STA 552+33 - 556+37

CONC C & G
30-INCH TYPE D
STA 174+85 - 175+59

CONC C & G
30-INCH TYPE D

LOCATION MAP

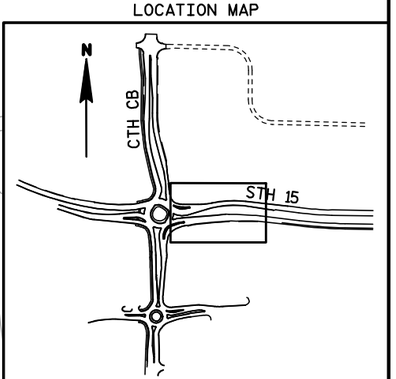

PROJECT NO: 1146-39-71	HWY: STH 15	COUNTY: OUTAGAMIE	PLAN DETAILS	SHEET 19	E

FILE NAME : F:\d3_114639\021203_pd.dgn PLOT DATE : 27-JUL-2011 13:23 PLOT BY : dotmzc PLOT NAME : 021203 pd PLOT SCALE : 40.000000:1.000000

WISDOT/CADDS SHEET 42

CONC C & G
4-INCH SLOPED
36-INCH TYPE A
STA 179+61 - 181+42

CONC C & G
4-INCH SLOPED
36-INCH TYPE A
STA 650+00 - 652+80

ASPHALTIC FLUME
(TYP)

SLOPE INTERCEPTS

EBS area 1' deep

WB APPROACH ALIGNMENT

PAVED SHOULDER

PAVT JOINT/
CROWN POINT

SALVAGED TOPSOIL, SEED, MULCH
OR E-MAT & FERTILIZER

SHOULDER LINE

STH 15 WB

EBS area - 3' deep
over-excavation from
top of BAD 1 1/4"

10-INCH DOWELED/TINED
CONC PAVT

STH 15 EB

PRIMARY ALIGNMENT
FOR X-SECTIONS

END TAPER
182+09

PAVED SHOULDER

PAVT JOINT/
CROWN POINT

N

PAVT JOINT/
CROWN POINT

WB APPROACH ALIGNMENT

PAVED SHOULDER

END CONSTRUCTION
187+94
SAW CUT

SALVAGED TOPSOIL, SEED, MULCH
OR E-MAT & FERTILIZER

STH 15 WB

PRIMARY ALIGNMENT
FOR X-SECTIONS

10-INCH DOWELED/TINED
CONC PAVT

STH 15 EB

SAW CUT

END PROJECT
STA 188+00

PAVT JOINT/
CROWN POINT

PAVED SHOULDER

LOCATION MAP

CTH CB

STH 15

PROJECT NO: 1146-39-71	HWY: STH 15	COUNTY: OUTAGAMIE	PLAN DETAILS	SHEET 20	E

LEGEND

CONCRETE SIDEWALK 4-INCH (RED)

* CONC MEDIAN SLOPED NOSE TYPE 2

SALVAGED TOPSOIL, SEED, MULCH OR E-MAT & FERTILIZER

CONC C & G 30-INCH TYPE D STA 502+50 - 509+19

CONC C & G 30-INCH TYPE D

COUNTY JOB (BY OTHERS) | CONSTRUCTION LIMITS STA 16+50

TLE

MULTI USE PATH

EXISTING R/W

SLOPE INTERCEPTS

TYPE 2 CURB RAMP (TYP)

CONC CURB TYPE A

2.5-INCH ASPHALTIC SURFACE (TYP)

SEE SPLITTER ISLAND CONSTRUCTION DETAIL

SB EXIT ALIGNMENT

CONC C & G 4-INCH SLOPED 36-INCH TYPE R

CTH CB SB

CTH CB NB

ASPHALT

PAVT JOINT

START TAPER STA 552+47

PRIMARY ALIGNMENT FOR X-SECTIONS

CONC C & G 30-INCH TYPE D STA 552+29 - 556+37

CONC MEDIAN SLOPED NOSE TYPE 1

CONC C & G 30-INCH TYPE D

CONC ROUNDABOUT TRUCK APRON 12-INCH (RED)

10-INCH DOWELED CONC PAVT

10" HMA PAVT INTERSECTIONS

CROWN POINT

SEE PLANTING DETAIL

STH 15 EB

STH 15 WB

MULTI USE PATH

LOCATION MAP

CTH CB

STH 15

PROJECT NO: 1146-39-71	HWY: STH 15	COUNTY: OUTAGAMIE	PLAN DETAILS	SHEET 21 E

2

2

LEGEND

CONCRETE SIDEWALK 4-INCH (RED)

* CONC MEDIAN SLOPED NOSE TYPE 2

N

SEE SPLITTER ISLAND CONSTRUCTION DETAIL

OVERHEAD SIGN SUPPORT

CONC C & G 30-INCH TYPE D STA 603+00 - 608+37

2.5-INCH ASPHALTIC SURFACE (TYP)

CONC C & G 30-INCH TYPE D STA 21+61.5 - 26+00

CONC C & G 6-INCH SLOPED 36-INCH TYPE D STA 608+37 - 613+59.5

TYPE 2 CURB RAMP (TYP)

R/W LINE

SLOPE INTERCEPTS

MULTIUSE PATH

CTH CB SB

HMA PAVEMENT TYPE E-3

CTH CB NB

END TAPER

START TAPER

LANE EDGE

SHOULDER LINE

PAVED SHOULDER

CONC C & G 4-INCH SLOPED 36-INCH TYPE D STA 26+00 - 31+10

CONC C & G 4-INCH SLOPED 36-INCH TYPE D STA 24+25 - 28+55

NB EXIT ALIGNMENT

ASPHALTIC FLUME

PRIMARY ALIGNMENT FOR X-SECTIONS

CONC C & G 30-INCH TYPE D STA 21+54 - 24+25

CONC C & G 30-INCH TYPE D STA 654+91 - 660+65

SALVAGED TOPSOIL, SEED, MULCH OR E-MAT & FERTILIZER

TRANSITION 5" TO 10" HMA PAVT

LOCATION MAP

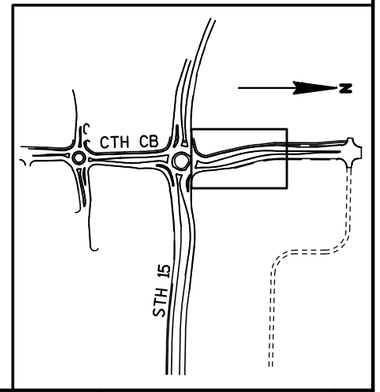

PROJECT NO: 1146-39-71	HWY: STH 15	COUNTY: OUTAGAMIE	PLAN DETAILS	SHEET 22 E

2

CONC C & G
4-INCH SLOPED
36-INCH TYPE D
STA 26+00 - 31+10

CONC C & G
6-INCH SLOPED
36-INCH TYPE D
STA 608+37 - 613+59.5

HMA PAVEMENT
TYPE E-3

2.5-INCH
ASPHALTIC SURFACE

CONCRETE MEDIAN
SLOPED NOSE TYPE 1

~~ASPHALTIC FLUME~~
~~(TYP)~~

TYPE 2 CURB
RAMP

CONSTRUCTION LIMITS
STA 0+25

N

2

R/W LINE

EBS area - 2.0' deep
from top of breaker

SLOPE INTERCEPTS

EBS area - 2.0' deep
from top of breaker

EBS area - 2.0' deep
from top of breaker

MULTIUSE PATH

610 611 612 613

CTH CB SB

CTH CB NB

EBS area - depth
vaired 1.5' to 2.0' deep

PRIMARY ALIGNMENT
FOR X-SECTIONS

FUTURE MULTIUSE PATH

SHOULDER LINE

SLOPE INTERCEPTS

R/W LINE

CONSTRUCTION LIMITS
STA 33+63

TYPE 2 CURB
RAMP (TYP)

NB EXIT ALIGNMENT

PAVED SHOULDER
(HMA PAVT)

ASPHALTIC FLUME
STA 1+99

CONC C & G
4-INCH SLOPED
36-INCH TYPE D
STA 24+25 - 28+55

CONC C & G
30-INCH TYPE D
STA 28+55 - 31+14

CONC C & G
6-INCH SLOPED
36-INCH TYPE D
(TYP)

3-INCH HMA PAVEMENT

SALVAGED TOPSOIL, SEED, MULCH
OR E-MAT & FERTILIZER

CONSTRUCTION LIMITS
STA 2+50

FUTURE NEUBERT RD
(BY OTHERS)

LOCATION MAP

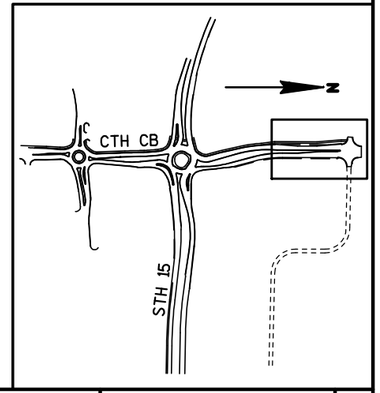

PROJECT NO: 1146-39-71	HWY: STH 15	COUNTY: OUTAGAMIE	PLAN DETAILS	SHEET 23	E

NOTES:

PAVEMENT GRADES ARE SHOWN AT CURB FLANGE.

N

EXISTING R/W

CONSTRUCTION LIMIT 166+00

EDGE OF CONCRETE PAVEMENT

SHOULDER LINE

SLOPE INTERCEPTS

25' TYP

CONSTRUCTION LIMIT

LANE EDGE

STH 15

CONSTRUCTION LIMIT 167+18

EXISTING R/W

SLOPE INTERCEPTS

164 879.93 880.03 880.13 880.24

165 880.34 880.44 880.54 880.64

165 880.42 880.53 880.64 880.74

166 880.74 880.84 880.94 881.05

166 880.85 880.97 881.08 881.19

167 881.31

167 881.16 881.27 881.39 881.52

168 881.65 881.79 881.94 882.09

169 882.25

500 882.58 882.68

168 881.43 881.55 881.67 881.79 881.92 882.04 882.17 882.29

169 882.29 882.41

501 882.78 882.87 882.91 882.97 883.04 883.07 883.16 883.16 883.28 883.26 883.38 883.50

502 883.36 883.46

879.93 880.03 880.13 880.21 880.37 880.23 880.43 880.23 880.48 880.26 880.58 880.29 880.64 880.38 880.78 880.49 880.93 880.61 881.08 880.66 881.19

.033"/'

.039"/'

.042"/'

.045"/'

.043"/'

.042"/'

.080"/'

24'

26'

24'

26'

LOCATION MAP

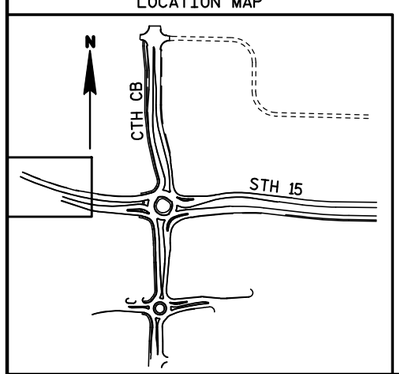

PROJECT NO: 1146-39-71	HWY: STH 15	COUNTY: OUTAGAMIE	CONSTRUCTION DETAILS (PAVEMENT GRADES)	SHEET 24	E

NOTES:

PAVEMENT GRADES ARE SHOWN AT CURB FLANGE.

OVERHEAD SIGN SUPPORT

N

R/W LINE

EXISTING R/W

SLOPE INTERCEPTS

END FULL LANE
169+32

END CONCRETE
PAVEMENT 172+46

END CONCRETE
PAVEMENT 169+60

MULTI USE PATH

HP 884.84
STA 603+71.73

LP 884.41
STA 604+27.80

CTH CB

CROWN POINT

HP 885.27
STA 104+93

HP 884.55
STA 78+64.08

LP 882.65
STA 81+22

LP 881.36
STA 76+31.75

LP 881.80
STA 101+56

STH 15

LP 883.20
STA 200+44.66

LP 882.89
STA 250+53.46

HP 883.63
STA 502+86.62

LP 882.53
STA 504+91.04

HP 883.09
STA 505+62.87

SLOPE INTERCEPTS

EXISTING R/W

LOCATION MAP

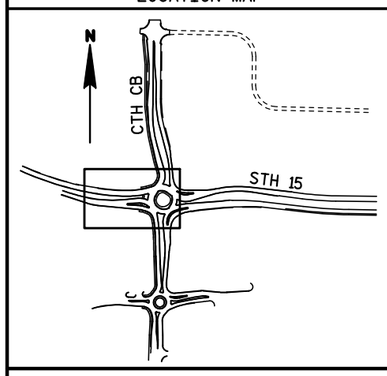

PROJECT NO: 1146-39-71	HWY: STH 15	COUNTY: OUTAGAMIE	CONSTRUCTION DETAILS (PAVEMENT GRADES)	SHEET E

FILE NAME : F:\d3_114639\021102_id.dgn PLOT DATE : 27-JUL-2011 13:23 PLOT BY : dotmzc PLOT NAME : 021102 id PLOT SCALE : 40.000000:1.000000

NOTES:

PAVEMENT GRADES ARE SHOWN AT CURB FLANGE.

OVERHEAD SIGN SUPPORT

N

R/W LINE

EXISTING R/W

SLOPE INTERCEPTS

START CONCRETE PAVEMENT 177+50

HP 880.38 STA 655+97.30

LP 880.10 STA 656+45.90

STH 15

CROWN POINT

START CONCRETE PAVEMENT 175+59

START CONCRETE PAVEMENT 176+91

SHOULDER LINE

START TAPER STA 179+14

HP 881.62 STA 555+57.00

EXISTING R/W

LOCATION MAP

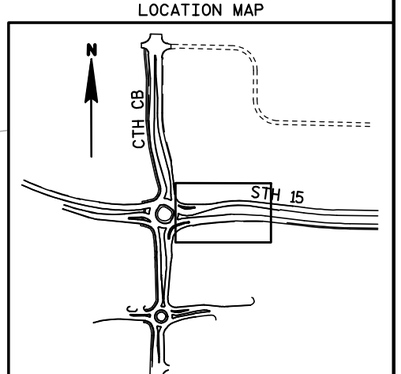

PROJECT NO: 1146-39-71	HWY: STH 15	COUNTY: OUTAGAMIE	CONSTRUCTION DETAILS (PAVEMENT GRADES)	SHEET 26 E

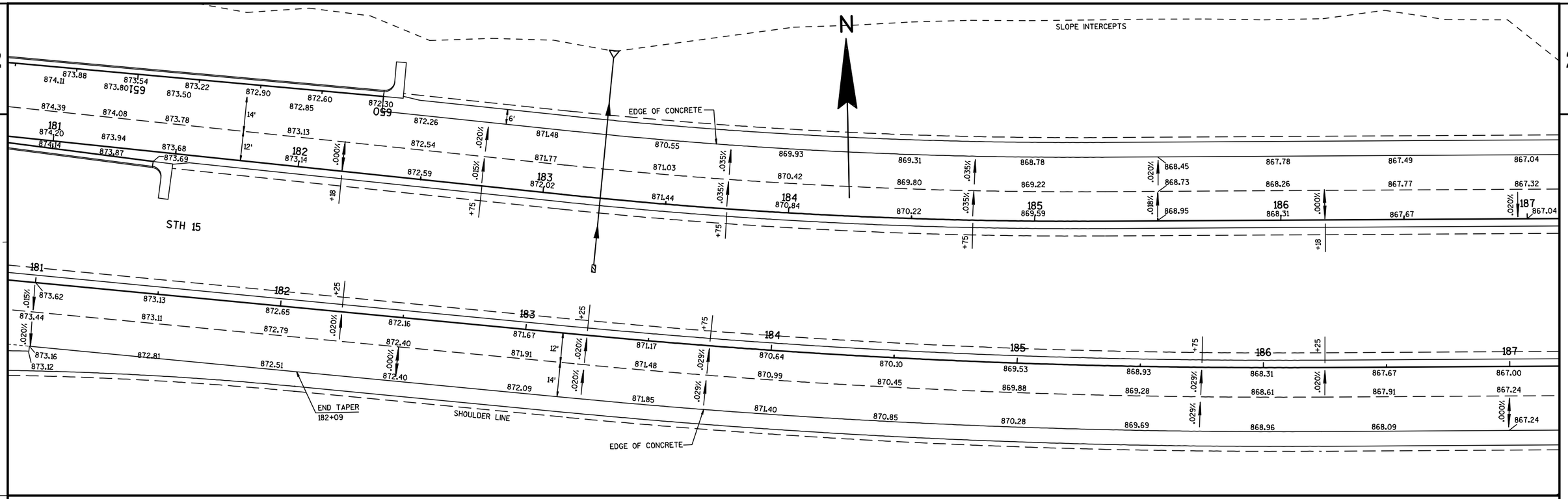

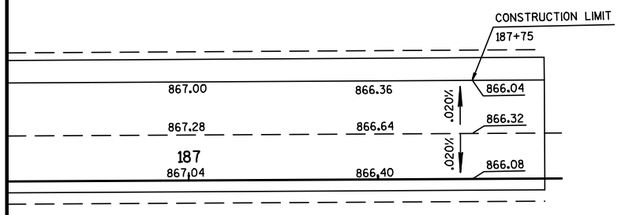

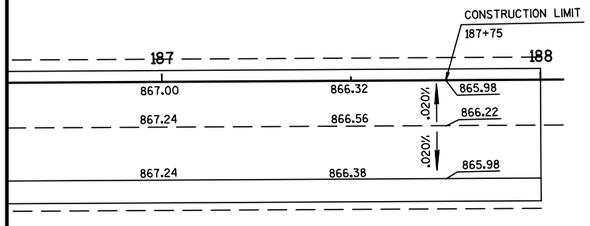

NOTES:

PAVEMENT GRADES ARE SHOWN AT CURB FLANGE.

LOCATION MAP

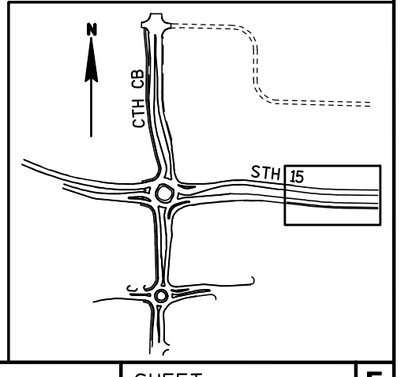

PROJECT NO: 1146-39-71	HWY: STH 15	COUNTY: OUTAGAMIE	CONSTRUCTION DETAILS (PAVEMENT GRADES)	SHEET 27	E

NOTES:

PAVEMENT GRADES ARE SHOWN AT CURB FLANGE.

OVERHEAD SIGN SUPPORT

N

COUNTY JOB | CONSTRUCTION LIMITS

EXISTING R/W

SLOPE INTERCEPTS

TLE

MULTI USE PATH

CTH CB

ASPHALT

EXISITNG R/W

STH 15

CROWN POINT

LOCATION MAP

PROJECT NO: 1146-39-71	HWY: STH 15	COUNTY: OUTAGAMIE	CONSTRUCTION DETAILS (PAVEMENT GRADES)	SHEET 28 E

2

N

R/W LINE

SLOPE INTERCEPTS

MULTI USE PATH

CTH CB

SHOULDER LINE

SLOPE INTERCEPTS

R/W LINE

LP 884.41
STA. 604+27.80

HP 884.84
STA. 603+71.73

HP 886.13
STA. 23+79.13

START LEFT TURN
LANE TAPER 24+50

STA. 606+84.11
HP 686.72

HP 886.11
STA. 24+12.20

HP 885.78
STA. 660+05.79

NOTES:

PAVEMENT GRADES ARE SHOWN AT CURB FLANGE.

OVERHEAD SIGN SUPPORT

LOCATION MAP

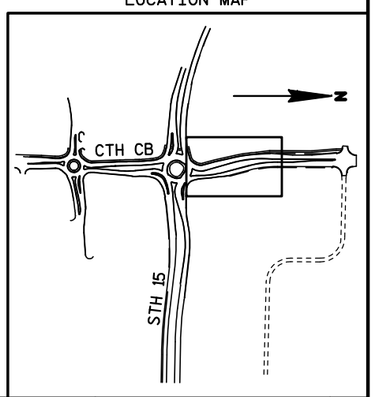

PROJECT NO: 1146-39-71	HWY: STH 15	COUNTY: OUTAGAMIE	CONSTRUCTION DETAILS (PAVEMENT GRADES)	SHEET 29	E

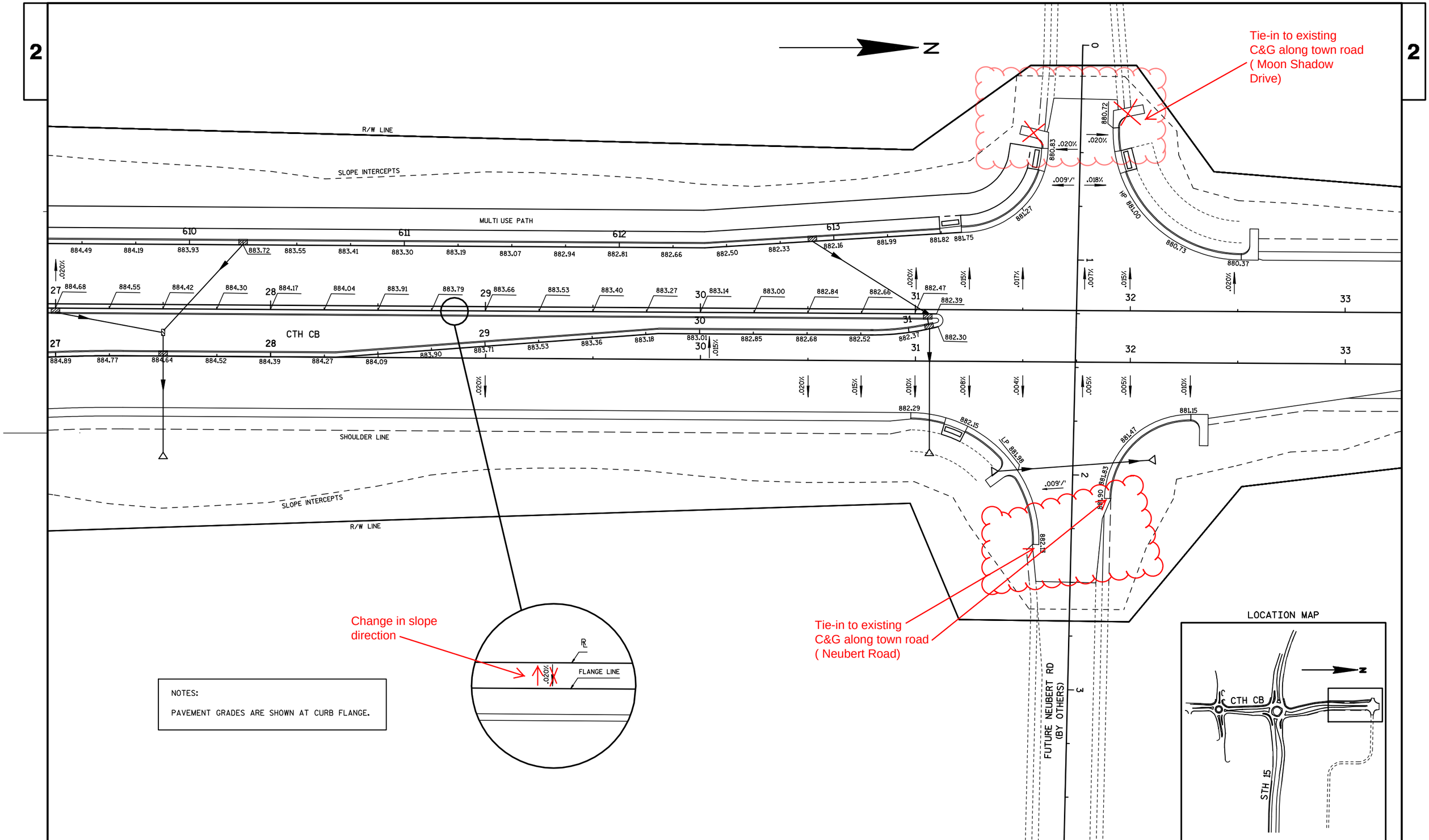

PROJECT NO:1146-39-71	HWY:STH 15	COUNTY:OUTAGAMIE	CONSTRUCTION DETAILS (PAVEMENT GRADES)	SHEET 30	E

FILE NAME : F:\d3_114639\021107_id.dgn PLOT DATE : 27-JUL-2011 13:23 PLOT BY : dotmzc PLOT NAME : 021107 Id PLOT SCALE : 40.000000:1.000000 WISDOT/CADDS SHEET 42

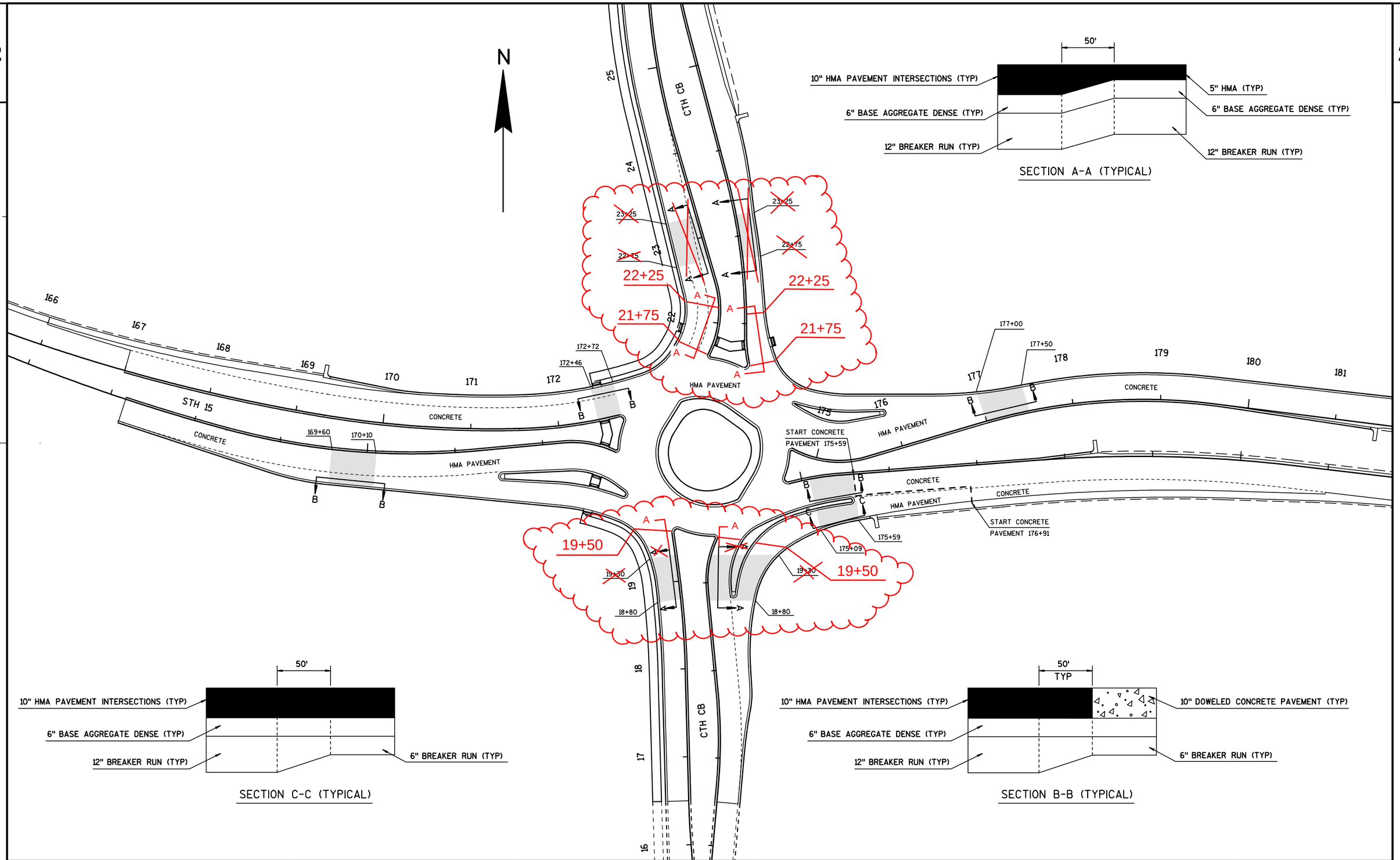

SECTION A-A (TYPICAL)

SECTION C-C (TYPICAL)

SECTION B-B (TYPICAL)

PROJECT NO: 1146-39-71	HWY: STH 15	COUNTY: OUTAGAMIE	CONSTRUCTION DETAIL (PAVEMENT TRANSITIONS)	SHEET 31 E

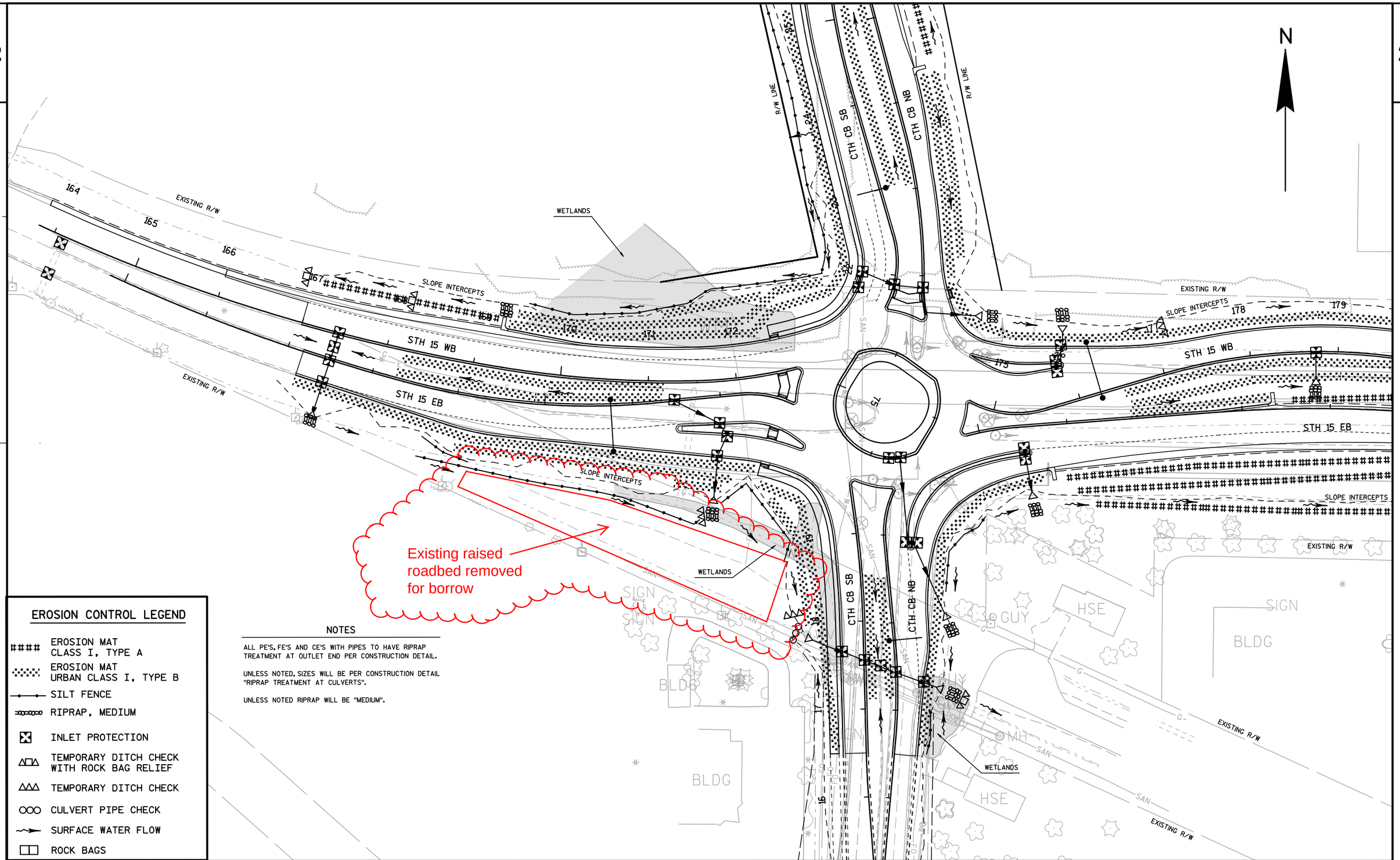

EROSION CONTROL LEGEND

- #### EROSION MAT CLASS I, TYPE A
- EROSION MAT URBAN CLASS I, TYPE B
- SILT FENCE
- RIPRAP, MEDIUM
- INLET PROTECTION
- TEMPORARY DITCH CHECK WITH ROCK BAG RELIEF
- TEMPORARY DITCH CHECK
- CULVERT PIPE CHECK
- SURFACE WATER FLOW
- ROCK BAGS

NOTES

ALL PE'S, FE'S AND CE'S WITH PIPES TO HAVE RIPRAP TREATMENT AT OUTLET END PER CONSTRUCTION DETAIL.

UNLESS NOTED, SIZES WILL BE PER CONSTRUCTION DETAIL "RIPRAP TREATMENT AT CULVERTS".

UNLESS NOTED RIPRAP WILL BE "MEDIUM".

PROJECT NO:1146-39-71	HWY:STH 15	COUNTY:OUTAGAMIE	EROSION CONTROL	SHEET 32	E

FILE NAME : F:\d3_114639\022001_ec.DGN PLOT DATE : 27-JUL-2011 13:24 PLOT BY : dotmzc PLOT NAME : 022001EC PLOT SCALE : 100.000000:1.000000 WISDOT/CADDS SHEET 42

2

N

BLDG

EXISTING R/W

179 180 181 182 183 184 185 186 187

STH 15 WB

STH 15 EB

EXISTING R/W

EROSION CONTROL LEGEND

- EROSION MAT CLASS I, TYPE A
- EROSION MAT URBAN CLASS I, TYPE B
- SILT FENCE
- RIPRAP, MEDIUM
- INLET PROTECTION
- TEMPORARY DITCH CHECK WITH ROCK BAG RELIEF
- TEMPORARY DITCH CHECK
- CULVERT PIPE CHECK
- SURFACE WATER FLOW
- ROCK BAGS

NOTES

ALL PE'S, FE'S AND CE'S WITH PIPES TO HAVE RIPRAP TREATMENT AT OUTLET END PER CONSTRUCTION DETAIL.

UNLESS NOTED, SIZES WILL BE PER CONSTRUCTION DETAIL "RIPRAP TREATMENT AT CULVERTS".

UNLESS NOTED RIPRAP WILL BE "MEDIUM".

PROJECT NO: 1146-39-71	HWY: STH 15	COUNTY: OUTAGAMIE	EROSION CONTROL	SHEET 33	E

2

N

WETLANDS

R/W LINE

24 25 26 27 28 29 30 31 32 33

CTH CB SB

CTH CB NB

WETLANDS

R/W LINE

Rip rap not needed as the C&G ties into existing C&G located on Moon Shadow Drive.

Rip rap not needed as this culvert discharges to a town of Greenville storm sewer system

NEUBERT RD (BY OTHERS)

3 4 5 6

EROSION CONTROL LEGEND

- #### EROSION MAT CLASS I, TYPE A
- EROSION MAT URBAN CLASS I, TYPE B
- SILT FENCE
- RIPRAP, MEDIUM
- INLET PROTECTION
- TEMPORARY DITCH CHECK WITH ROCK BAG RELIEF
- TEMPORARY DITCH CHECK
- CULVERT PIPE CHECK
- SURFACE WATER FLOW
- ROCK BAGS

NOTES

ALL PE'S, FE'S AND CE'S WITH PIPES TO HAVE RIPRAP TREATMENT AT OUTLET END PER CONSTRUCTION DETAIL.

UNLESS NOTED, SIZES WILL BE PER CONSTRUCTION DETAIL "RIPRAP TREATMENT AT CULVERTS".

UNLESS NOTED RIPRAP WILL BE "MEDIUM".

PROJECT NO: 1146-39-71	HWY: STH 15	COUNTY: OUTAGAMIE	EROSION CONTROL	SHEET 34	E

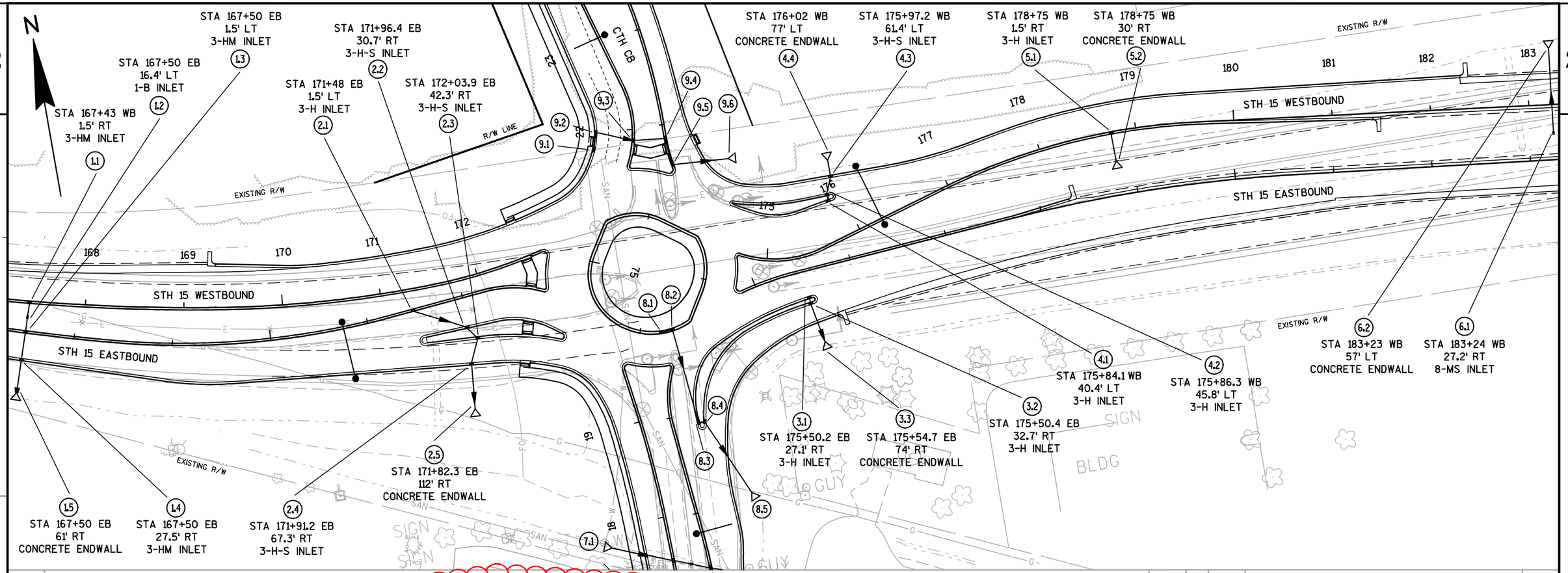

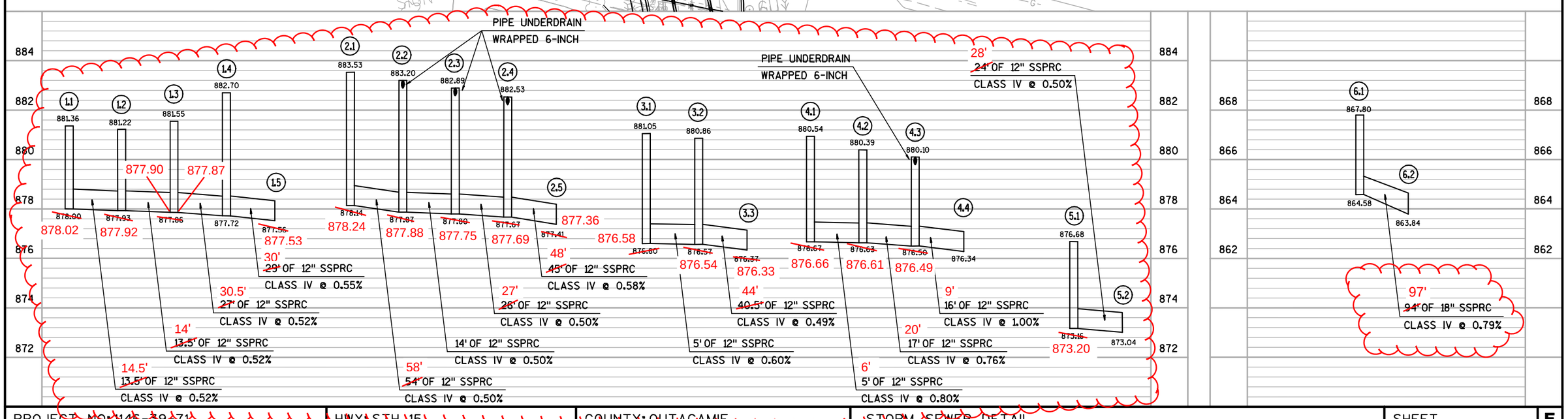

PROJECT NO: 1146-39-71	HWY: STH 15	COUNTY: OUTAGAMIE	STORM SEWER DETAIL	SHEET 35	E

STA 17+50.6 NB
19.2' LT
1-B MANHOLE
2'x2' OPENING

STA 17+80 SB
58' LT
CONCRETE ENDWALL

STA 17+55 SB
1.5' RT
3-H INLET

STA 17+65.8 SB
25.5' LT
3-H INLET

STA 17+43 NB
1.5' LT
3-H INLET

STA 18+88.1 NB
25.5' RT
3-H INLET

STA 76+22 CIRC
1.5' LT
3-T INLET

STA 76+34 CIRC
1.5' LT
3-T INLET

STA 21+70.8 SB
37.5' LT
3-H-S INLET

STA 27+00 SB
4.2' RT
3-HM INLET

STA 27+50 NB
11.0' LT
1-B MANHOLE
2'x2' OPENING

STA 27+87 SB
29.5' LT
3-HM INLET

STA 30+52 SB
32.8' LT
3-HM INLET

STA 31+04 SB
3.5' RT
3-HM INLET

CTH CB SB

CTH CB NB

CTH CB SOUTHBOUND

CTH CB NORTHBOUND

R/W LINE

R/W LINE

STH 15

NEUBERT RD

Storm sewer system installed by Town of Greenville- "See Sheet 36A"

STA 17+26 NB
43.5' RT
CONCRETE ENDWALL

STA 17+31.4 NB
29.8' RT
3-H INLET

STA 18+05.5 NB
58.4' RT
CONCRETE ENDWALL

STA 18+87.1 NB
31.3' RT
3-H INLET

STA 21+58.2 NB
1.5' LT
3-H-S INLET

STA 21+86 NB
1.5 LT
3-H INLET

STA 21+89 SB
1.5' RT
3-H INLET

STA 21+97.2 SB
37.5' LT
3-H INLET

STA 77+52.4 CIRC
84.3' RT
CONCRETE ENDWALL

STA 27+50 NB
1.5' LT
3-HM INLET

STA 27+50 NB
44.7' RT
CONCRETE ENDWALL

STA 31+04.7 SB
7.4' RT
3-HS INLET

STA 31+06.6 NB
40.9' RT
CONCRETE ENDWALL

STA 31+31 NB
52.9' RT
APRON ENDWALL
FOR CPCS

STA 32+19 NB
44.6' RT
APRON ENDWALL
FOR CPCS

PIPE UNDERDRAIN
WRAPPED 6-INCH

16' 14' OF 18" SSPRC CLASS IV @ 0.57%

33' 31' OF 18" SSPRC CLASS IV @ 0.61%

18' OF 18" SSPRC CLASS IV @ 0.67%

20' 16.5' OF 18" SSPRC CLASS IV @ 0.61%

29' 28' OF 18" SSPRC CLASS IV @ 0.57%

37' 35' OF 18" SSPRC CLASS IV @ 0.51%

88' 84' OF 15" SSPRC CLASS IV @ 0.51%

98' 96' OF 15" SSPRC CLASS IV @ 0.51%

12' 10' OF 12" SSPRC CLASS IV @ 1.00%

6' 7' OF 15" SSPRC CLASS IV @ 0.57%

17' 15' OF 12" SSPRC CLASS IV @ 0.53%

38' 37' OF 12" SSPRC CLASS IV @ 0.51%

32' 30' OF 12" SSPRC CLASS IV @ 0.37%

28' 25' OF 12" SSPRC CLASS IV @ 0.48%

60' 52' OF 12" SSPRC CLASS IV @ 0.54%

50' 48' OF 12" SSPRC CLASS IV @ 0.50%

55' 53' OF 12" SSPRC CLASS IV @ 0.49%

9' 7' OF 12" SSPRC CLASS IV @ 0.86%

3' 2.5' OF 12" SSPRC CLASS IV @ 0.80%

57' 55' OF 12" SSPRC CLASS IV @ 0.43%

54' 51' OF 12" SSPRC CLASS IV @ 0.49%

64' OF 12" SSPRC CLASS IV @ 0.50%

Installed by Town of Greenville

88' OF 21" CPCS @ 0.50%

PROJECT NO: 1146-39-71	HWY: STH 15	COUNTY: OUTAGAMIE	STORM SEWER DETAIL	SHEET 36	E

Town of Greenville storm sewer system

SCALES:
1" = 40' HOR
1" = 4' VER

MOON SHADOW DRIVE

NEUBERT ROAD

GRADE & GRAVEL TO CONNECT MOON SHADOW TO NEUBERT

FUTURE STREET (BY OTHERS)

FUTURE STREET (BY OTHERS)

HYDRANT/26'LT
STA 33+84
10" x 6" TEE
6.5'-6" LEAD
F.G. = 877.92

10" VALVE
33+68/19.5'L
F.G.=877.72

10" VALVE
33+98/19.5'L
F.G.=877.82

10"x8" CROSS
33+92/19.5'L

STO INLET
STA 34+54/16.5'L
F/L 877.98
INV 873.98
D = 4.00'

10" VALVE
36+85/21.5'L
F.G.=881.05

10"x12" CROSS
36+75/21.5'L

HYDRANT/32'LT
STA 40+75
10" x 6" TEE
10.5'-6" LEAD
6" HYD VALVE
F.G. = 880.21

10" VALVE
40+79/21.5'L
F.G.=879.92

STO INLET
STA 41+00/18.5'L
F/L 879.30
INV 875.30
D = 4.00'

45° BEND
42+68/21.5'L

8" VALVE
33+92/12'L
F.G.=877.32

PLUG

END STONE BASE
48° RIGHT

STO INLET
STA 34+34/16.5'R
F/L 877.98
INV 873.98
D = 4.00'

STO INLET
STA 36+84/24.5'R
F/L 880.92
INV 876.92
D = 4.00'

STO INLET
STA 41+00/18.5'R
F/L 879.30
INV 875.30
D = 4.00'

PC Sta = 33+02.74

PT Sta = 35+19.34

PC Sta = 42+58.32

PT Sta =

PROPOSED CL PROFILE

EXISTING CL PROFILE

PROPOSED CL GRADES

EXISTING CL GRADES

PROPOSED 10" WATER MAIN

6.5' BURY (TYP.)

STO MH-T (5'DIA)
STA 34+19/7'L
RIM 877.79
INV 30"W 872.29
INV 15"E 872.29
D = 5.50'

STO MH-U (4'DIA)
STA 34+53/5'L
RIM 876.29
INV 15"W 872.79
INV 12"E 872.79
D = 5.50'

STO MH-V (4'DIA)
STA 36+83.10/5'L
RIM 881.10
INV 12"W,S 875.69
D = 5.50'

STO MH-Z (5'DIA)
STA 38+11/8'R
RIM 882.05
INV 24" E 876.55
INV 21" S 876.55
D = 5.50'

STO MH-Y (5'DIA)
STA 41+10/8'R
RIM 879.47
INV 24"W,E 873.97
D = 5.50'

SAN MH SA-5
STA 34+11
RIM 877.83
INV 8" W 867.73
D = 10.10'

SAN MH SA-11
STA 38+02
RIM 882.16
INV 8" E,N 869.32
D = 12.84'

SAN MH SA-10
STA 40+81
RIM 880.19
INV 8" E,W 866.28
D = 11.91'

Martenson & Eisele, Inc.
1377 Midway Road
Menasha, WI 54952
www.martenson-eisele.com
info@martenson-eisele.com
920.731.0381 1.800.236.0381
Planning
Environmental
Surveying
Engineering
Architecture

NO	DATE	CHECKED	APPROVED
		DRAWN BY CMC	MKK S.C.M.
1	10/25/11	REVISION: ADD HYDRANT, AUXILIARY VALVES	

TOWN OF GREENVILLE
MOON SHADOW DRIVE
ROAD RECONSTRUCTION
TOWN OF GREENVILLE, OUTAGAMIE COUNTY, WISCONSIN

HORZ 1" = 40'
VERT 1" = 4'
DATE 10-12-11
COMPUTER FILE \156905gc\topo\RCp02002
DRAWING NO C2.2

SHEET 36A

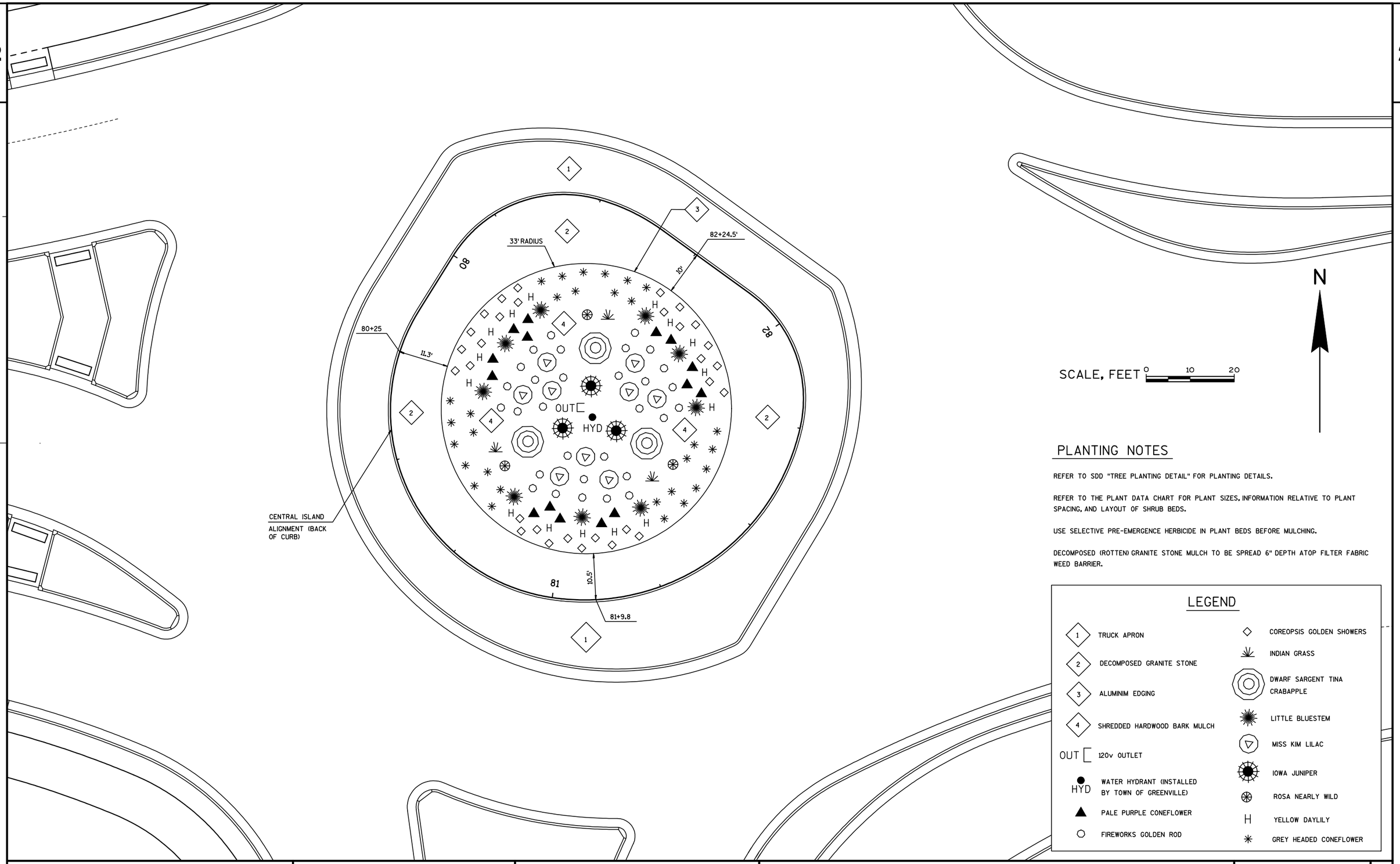

PLANTING NOTES

REFER TO SDD "TREE PLANTING DETAIL" FOR PLANTING DETAILS.

REFER TO THE PLANT DATA CHART FOR PLANT SIZES, INFORMATION RELATIVE TO PLANT SPACING, AND LAYOUT OF SHRUB BEDS.

USE SELECTIVE PRE-EMERGENCE HERBICIDE IN PLANT BEDS BEFORE MULCHING.

DECOMPOSED (ROTTEN) GRANITE STONE MULCH TO BE SPREAD 6" DEPTH ATOP FILTER FABRIC WEED BARRIER.

LEGEND

- 1 — TRUCK APRON
- 2 — DECOMPOSED GRANITE STONE
- 3 — ALUMINIM EDGING
- 4 — SHREDDED HARDWOOD BARK MULCH
- OUT — 120v OUTLET
- HYD — WATER HYDRANT (INSTALLED BY TOWN OF GREENVILLE)
- PALE PURPLE CONEFLOWER
- FIREWORKS GOLDEN ROD
- COREOPSIS GOLDEN SHOWERS
- INDIAN GRASS
- DWARF SARGENT TINA CRABAPPLE
- LITTLE BLUESTEM
- MISS KIM LILAC
- IOWA JUNIPER
- ROSA NEARLY WILD
- H — YELLOW DAYLILY
- GREY HEADED CONEFLOWER

PROJECT NO: 1146-39-71	HWY: STH 15	COUNTY: OUTAGAMIE	PLANTING DETAIL	SHEET 37	E

2

SYMBOL	COMMON NAME	SCIENTIFIC NAME	TYPE	AVG MATURE HEIGHT	SIZE WHEN PLANTED	ROOT ZONE MODE	MINIMUM SIZES					BRACE OR GUY	FERT. UNITS REQ'D	RODENT PROTCTN REQ'D	MULCH RING DIAMETER
							BALL/POT		ROOT SPREAD	PLANT DIA.	HOLE DEPTH				
							DIA.	DEPTH							
	SMALL DECIDUOUS TREES														
PC	DWARF SARGENT TINA CRABAPPLE	MALUS SARGENTII "TINA"	3T	6'	3'	B&B	22"	14"	32"	45"	22"	YES	3	YES	6'
	SMALL EVERGREEN TREES														
IJ	IOWA JUNIPER	JUNIPERUS CHINENSIS IOWA	4E	15'	5'	B&B	15"	10"	32"	40"	18"	NONE	3	NO	6'
	SMALL DECIDUOUS SHRUB														
NWR	ROSE, NEARLY WILD	ROSA SPP.'NEARLY WILD	3S	2'-3'	18"	CONT	9"	7"	12"	38"	7"	NONE	2	NO	BED
MKL	MISS KIM LILAC	SYRINGA PATULA'MISS KIM	3E	6'-7'	18"	CONT	12"	12"	12"	38"	7"	NONE	2	NO	BED
												NONE	2	NO	BED
	PERENNIALS/ORNAMENTAL GRASSES														
FGR	FIREWORKS GOLDEN ROD	SOLIDAGO RUGOSA FIREWORKS	4V	2.5'-3'	1 GAL	CONT	7"	6"	6"	14"	6"	NONE	1	NO	BED
HF	YELLOW DAYLILY	HEMEROCALLIS FLAVA	4V	2'	1 GAL	CONT	7"	8"	6"	18"	8"	NONE	1	NO	BED
GHC	GREY HEADED CONEFLOWER	RATIBIDA COLUMNIFERA	4V	2'-3'	1 GAL	CONT	7"	6"	6"	14"	6"	NONE	1	NO	BED
PPC	PALE PURPLE CONEFLOWER	ECHINACEA PURPUREA RUBINSTERN	4V	3'	1 GAL	CONT	7"	6"	6"	14"	6"	NONE	1	NO	BED
CGS	COREOPSIS GOLDEN SHOWER	COREOPSIS VERTICILLATA	4V	1'-2'	1 GAL	CONT	7"	6"	6"	14"	6"	NONE	1	NO	BED
IG	INDIAN GRASS	SORGHASTRUM NUTANS	4V	3'-5'	1 GAL	CONT	7"	6"	6"	14"	6"	NONE	1	NO	BED
LB	LITTLE BLUESTEM	SCHIZACHYRIUM SCOPARIUM "THE BLUE"	4V	3'-4'	1 GAL	CONT	7"	6"	6"	14"	6"	NONE	1	NO	BED

SIGNING NOTES

THE CONTRACTOR SHALL NOTIFY THE REGIONAL TRAFFIC UNIT, 920-492-5653, A MINIMUM OF TWO WEEKS PRIOR TO THE NEED FOR SIGN PLACEMENT TO ALLOW FOR STAKING IF ANY PERMANENT SIGNING REQUIRED ON THE PROJECT.

TYPE II SIGNS AND SUPPORTS REMOVED UNDER THE CONTRACT SHALL BE DELIVERED TO THE REGIONAL TRAFFIC UNIT. SIGNS SHALL BE CAREFULLY REMOVED FROM THEIR SUPPORTS, SORTED BY BASE MATERIAL AND PALLETIZED BY MATERIAL TYPE. SUPPORTS SHALL BE SORTED BY LENGTH AND TYPE. THE REGIONAL TRAFFIC UNIT, 920-492-5653, SHALL BE NOTIFIED THREE WORKING DAYS PRIOR TO DELIVERY OF SIGNS AND SUPPORTS.

WHEN AN EXISTING STOP SIGN AND SUPPORT IS TO BE REMOVED AND A NEW STOP SIGN AND SUPPORT ERECTED THE WORK SHALL BE DONE CONCURRENTLY. FOR OTHER SIGNS AND SUPPORTS THAT ARE TO BE REMOVED AND NEW SIGNS AND SUPPORTS ERECTED, THE REMOVAL OF THE EXISTING SIGN/SUPPORT AND ERECTION OF THE NEW SIGN/SUPPORT SHOULD BE DONE AS CONCURRENTLY AS POSSIBLE. IN NO CASE SHALL A SIGN/SUPPORT BE DOWN FOR MORE THAN 24 HOURS AND THERE SHALL NOT BE MORE THAN ONE SIGN OF THE SAME LEGEND MISSING IN A ROW.

WOOD POSTS SIZES, FOR TYPE II SIGNING, ARE ESTIMATED LENGTHS AND THE ACTUAL LENGTH WILL BE DETERMINED IN THE FIELD.

INSTALL 18" X 18" ORANGE FLAGS ON TOP OF THE YIELD SIGNS FOR THE FIRST SIX MONTHS OF OPERATION OF THE ROUNDABOUT TO EMPHASIZE THE YIELD MOVEMENT.

N

STH 15

CTH CB

MATCH LINE (SEE NEXT SHEET)

SEE OVERHEAD SIGN SUPPORT DETAILS (CTH CB SB)

SEE OVERHEAD SIGN SUPPORT DETAILS (STH 15 EB)

SEE OVERHEAD SIGN SUPPORT DETAILS (CTH CB NB)

SEE OVERHEAD SIGN SUPPORT DETAILS (STH 15 WB)

MOVED SIGN (SEE REMOVING SIGNS FOR EXISTING LOCATION)

I55-56 MOVED SIGN (SEE REMOVING SIGNS FOR EXISTING LOCATION)

W4-2R 36" x 36"

36"x36"

36"x18"

24"x24"

SIGN-PLACE NEW

PLAN SHEET PRODUCED BY WisDOT-NE REGION

PROJECT NO: 1146-39-71	HWY: STH 15	COUNTY: OUTAGAMIE	PERMANENT SIGNING-TYPE II	SHEET 39 E

SIGNING NOTES

THE CONTRACTOR SHALL NOTIFY THE REGIONAL TRAFFIC UNIT, 920-492-5653, A MINIMUM OF TWO WEEKS PRIOR TO THE NEED FOR SIGN PLACEMENT TO ALLOW FOR STAKING IF ANY PERMANENT SIGNING REQUIRED ON THE PROJECT.

TYPE II SIGNS AND SUPPORTS REMOVED UNDER THE CONTRACT SHALL BE DELIVERED TO THE REGIONAL TRAFFIC UNIT. SIGNS SHALL BE CAREFULLY REMOVED FROM THEIR SUPPORTS, SORTED BY BASE MATERIAL AND PALLETIZED BY MATERIAL TYPE. SUPPORTS SHALL BE SORTED BY LENGTH AND TYPE. THE REGIONAL TRAFFIC UNIT, 920-492-5653, SHALL BE NOTIFIED THREE WORKING DAYS PRIOR TO DELIVERY OF SIGNS AND SUPPORTS.

WHEN AN EXISTING STOP SIGN AND SUPPORT IS TO BE REMOVED AND A NEW STOP SIGN AND SUPPORT ERECTED THE WORK SHALL BE DONE CONCURRENTLY. FOR OTHER SIGNS AND SUPPORTS THAT ARE TO BE REMOVED AND NEW SIGNS AND SUPPORTS ERECTED, THE REMOVAL OF THE EXISTING SIGN/SUPPORT AND ERECTION OF THE NEW SIGN/SUPPORT SHOULD BE DONE AS CONCURRENTLY AS POSSIBLE. IN NO CASE SHALL A SIGN/SUPPORT BE DOWN FOR MORE THAN 24 HOURS AND THERE SHALL NOT BE MORE THAN ONE SIGN OF THE SAME LEGEND MISSING IN A ROW.

WOOD POSTS SIZES, FOR TYPE II SIGNING, ARE ESTIMATED LENGTHS AND THE ACTUAL LENGTH WILL BE DETERMINED IN THE FIELD.

INSTALL 18" X 18" ORANGE FLAGS ON TOP OF THE YIELD SIGNS FOR THE FIRST SIX MONTHS OF OPERATION OF THE ROUNDABOUT TO EMPHASIZE THE YIELD MOVEMENT.

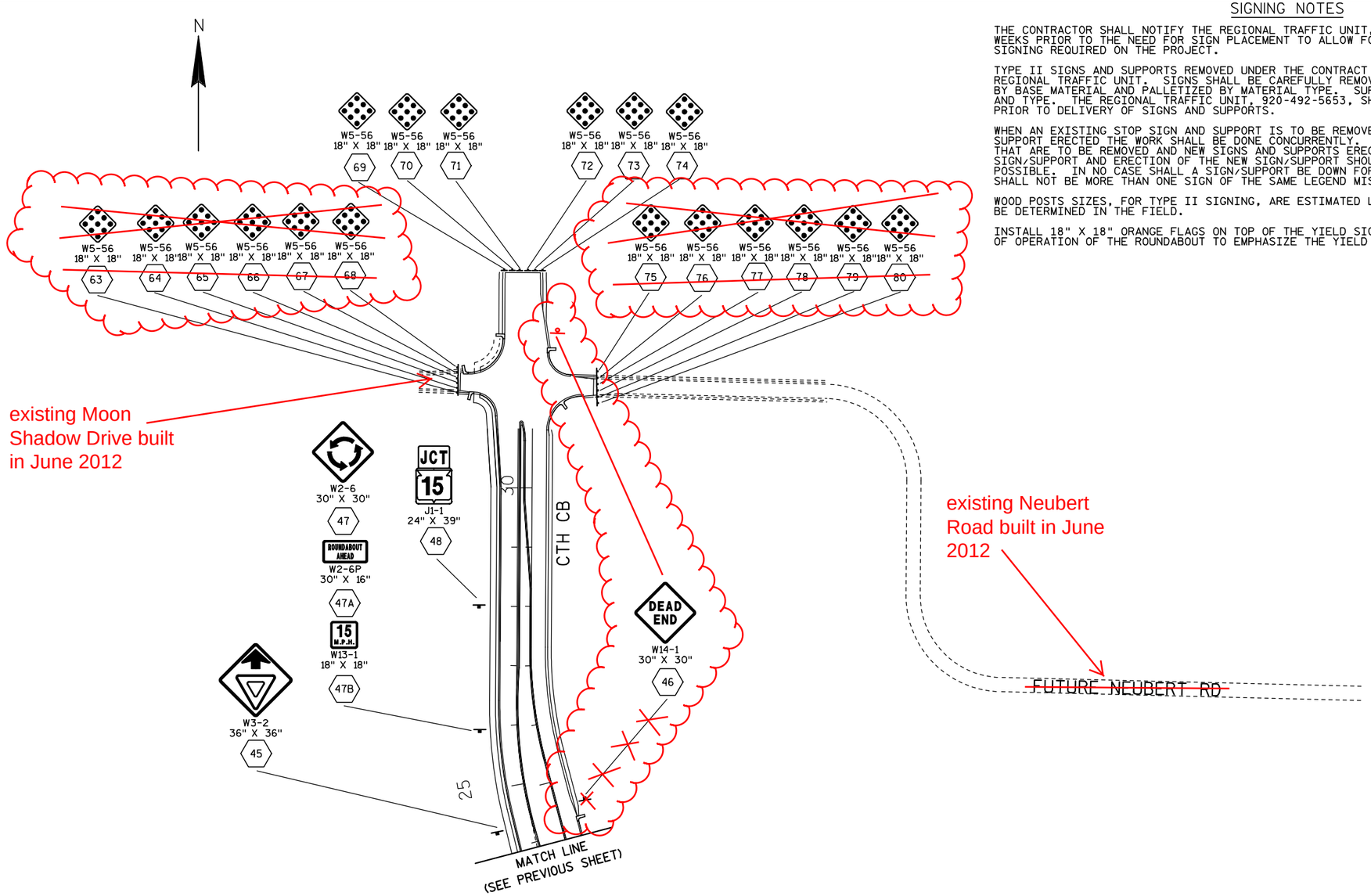

SIGN-PLACE NEW

PLAN SHEET PRODUCED BY WisDOT-NE REGION

PROJECT NO: 1146-39-71	HWY: STH 15	COUNTY: OUTAGAMIE	PERMANENT SIGNING-TYPE II	SHEET 40	E

2

GENERAL NOTES

1) DRAWINGS NOT TO SCALE.

2) DESIGN NEW OVERHEAD SIGN SUPPORTS ACCORDING TO THE LATEST EDITION OF, AND SUPPLEMENTAL TO THE STATE OF WISCONSIN "STANDARD SPECIFICATIONS FOR HIGHWAY AND STRUCTURE CONSTRUCTION" AND AASHTO "STANDARD SPECIFICATIONS FOR STRUCTURAL SUPPORTS FOR HIGHWAY SIGNS, LUMINAIRES, AND TRAFFIC SIGNALS."

3) PROVIDE AN IDENTIFICATION PLAQUE FOR ALL OVERHEAD SIGN SUPPORTS, TO BE CONSIDERED INCIDENTIAL TO THE BID ITEM "OVERHEAD SIGN SUPPORT".

4) PROVIDE DESIGN CALCULATIONS.

5) SIGNS OR BLANKS SHALL BE INSTALLED ON THE OVERHEAD SIGN SUPPORT AT THE TIME OF ERECTION. BLANKS IF USED, SHALL BE OF THE SAME SIZE AND LOCATION AS PERMANENT SIGNS.

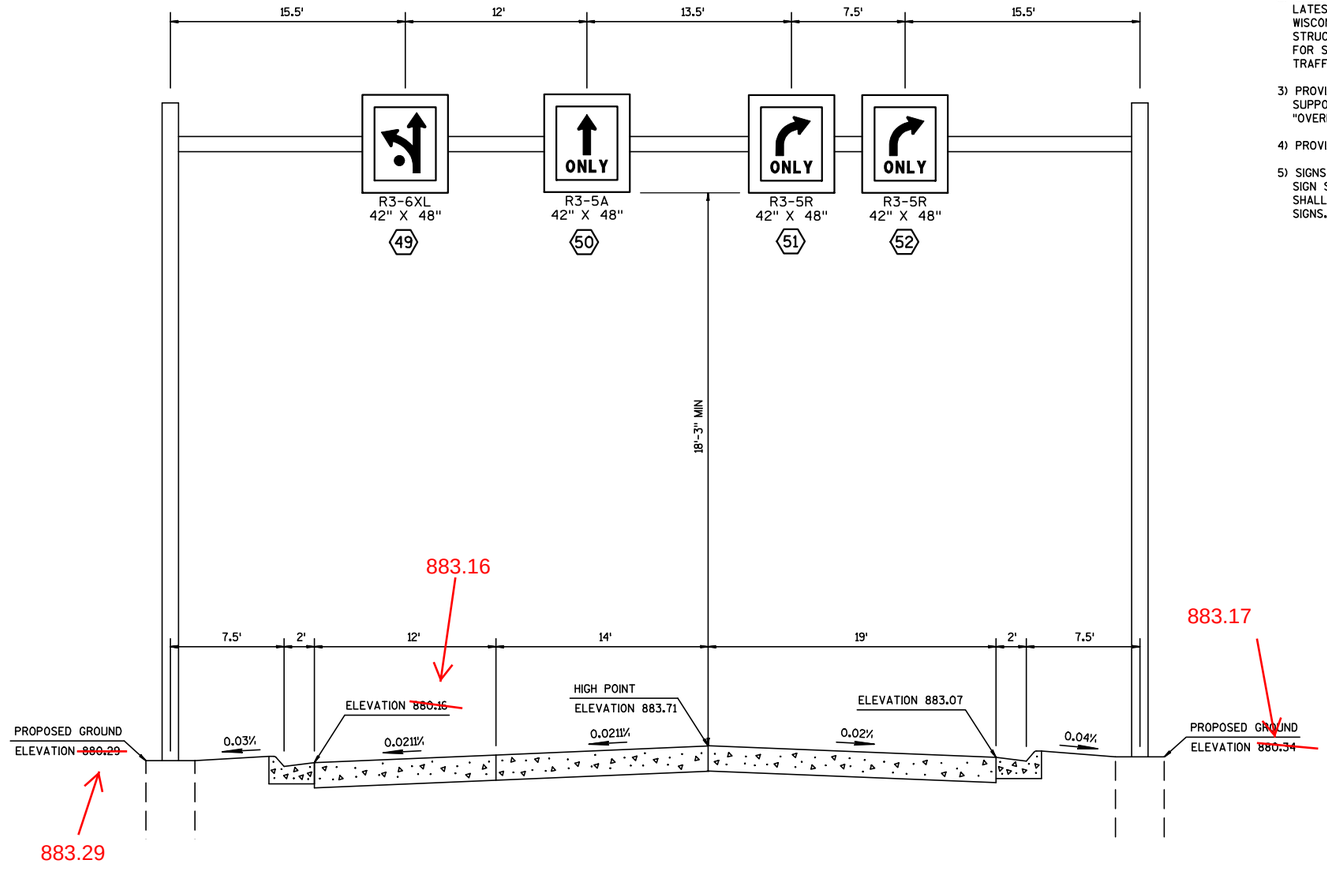

OVERHEAD SIGN SUPPORT DETAILS

S-44-0057
STA 170+75 STH 15 EB

2

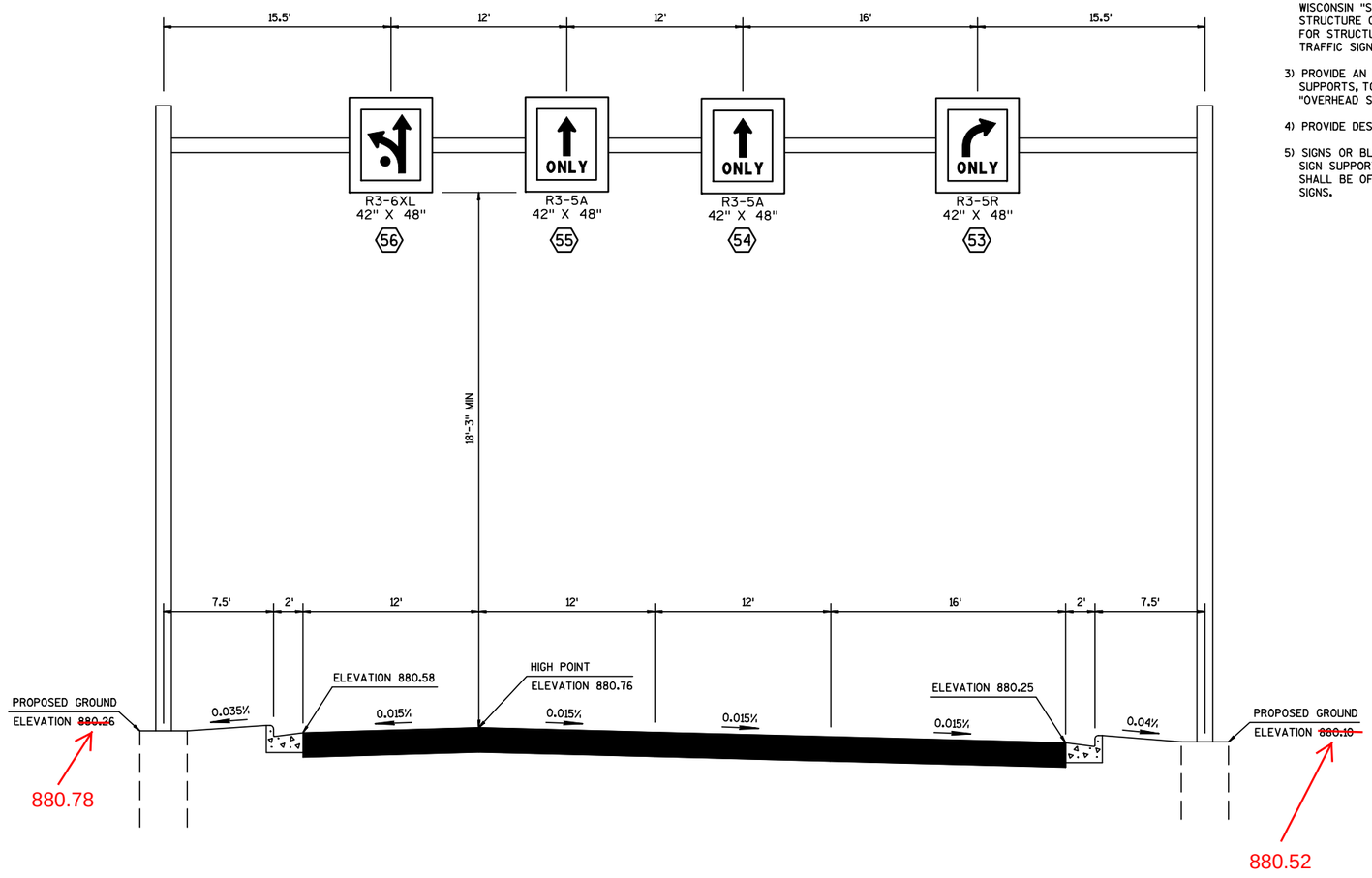

GENERAL NOTES

1) DRAWINGS NOT TO SCALE.

2) DESIGN NEW OVERHEAD SIGN SUPPORTS ACCORDING TO THE LATEST EDITION OF, AND SUPPLEMENTAL TO THE STATE OF WISCONSIN "STANDARD SPECIFICATIONS FOR HIGHWAY AND STRUCTURE CONSTRUCTION" AND AASHTO "STANDARD SPECIFICATIONS FOR STRUCTURAL SUPPORTS FOR HIGHWAY SIGNS, LUMINAIRES, AND TRAFFIC SIGNALS."

3) PROVIDE AN IDENTIFICATION PLAQUE FOR ALL OVERHEAD SIGN SUPPORTS, TO BE CONSIDERED INCIDENTIAL TO THE BID ITEM "OVERHEAD SIGN SUPPORT".

4) PROVIDE DESIGN CALCULATIONS.

5) SIGNS OR BLANKS SHALL BE INSTALLED ON THE OVERHEAD SIGN SUPPORT AT THE TIME OF ERECTION. BLANKS IF USED, SHALL BE OF THE SAME SIZE AND LOCATION AS PERMANENT SIGNS.

OVERHEAD SIGN SUPPORT DETAILS

S-44-0056
STA 176+25 STH 15 WB

2

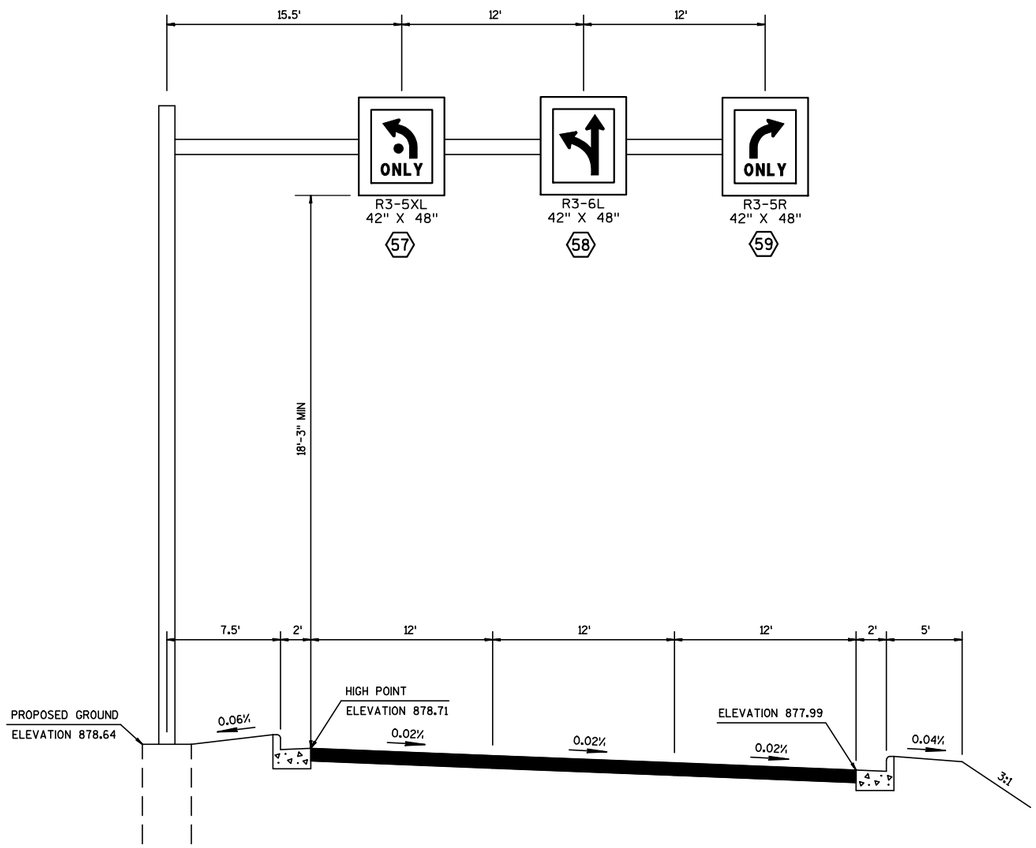

GENERAL NOTES

1) DRAWINGS NOT TO SCALE.

2) DESIGN NEW OVERHEAD SIGN SUPPORTS ACCORDING TO THE LATEST EDITION OF, AND SUPPLEMENTAL TO THE STATE OF WISCONSIN "STANDARD SPECIFICATIONS FOR HIGHWAY AND STRUCTURE CONSTRUCTION" AND AASHTO "STANDARD SPECIFICATIONS FOR STRUCTURAL SUPPORTS FOR HIGHWAY SIGNS, LUMINAIRES, AND TRAFFIC SIGNALS."

3) PROVIDE AN IDENTIFICATION PLAQUE FOR ALL OVERHEAD SIGN SUPPORTS, TO BE CONSIDERED INCIDENTIAL TO THE BID ITEM "OVERHEAD SIGN SUPPORT".

4) PROVIDE DESIGN CALCULATIONS.

5) SIGNS OR BLANKS SHALL BE INSTALLED ON THE OVERHEAD SIGN SUPPORT AT THE TIME OF ERECTION. BLANKS IF USED, SHALL BE OF THE SAME SIZE AND LOCATION AS PERMANENT SIGNS.

OVERHEAD SIGN SUPPORT DETAILS

S-44-0055
STA 17+80 CTH CB NB

2

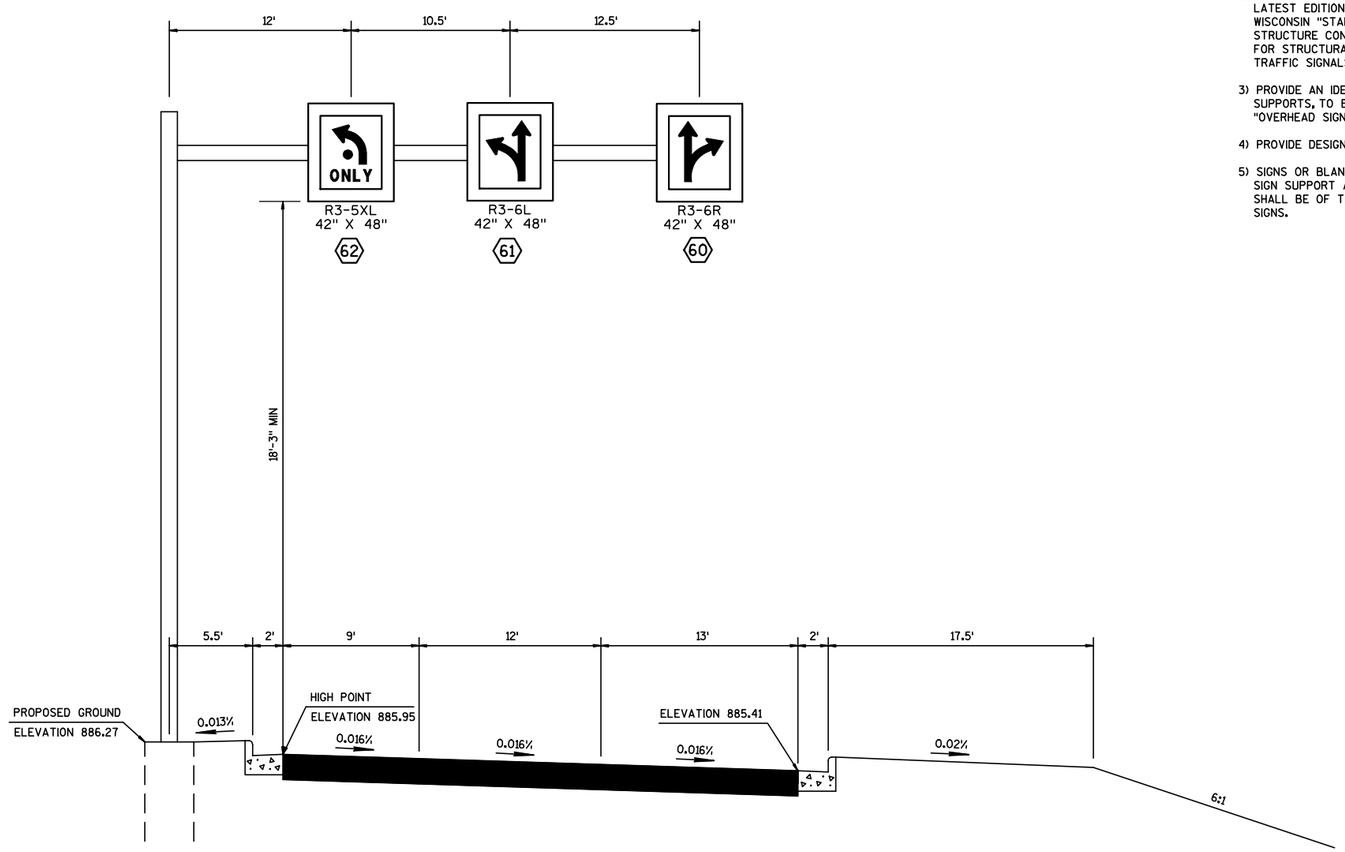

OVERHEAD SIGN SUPPORT DETAILS

S-44-0058
STA 23+00 CTH CB SB

GENERAL NOTES

1) DRAWINGS NOT TO SCALE.

2) DESIGN NEW OVERHEAD SIGN SUPPORTS ACCORDING TO THE LATEST EDITION OF, AND SUPPLEMENTAL TO THE STATE OF WISCONSIN "STANDARD SPECIFICATIONS FOR HIGHWAY AND STRUCTURE CONSTRUCTION" AND AASHTO "STANDARD SPECIFICATIONS FOR STRUCTURAL SUPPORTS FOR HIGHWAY SIGNS, LUMINAIRES, AND TRAFFIC SIGNALS."

3) PROVIDE AN IDENTIFICATION PLAQUE FOR ALL OVERHEAD SIGN SUPPORTS, TO BE CONSIDERED INCIDENTIAL TO THE BID ITEM "OVERHEAD SIGN SUPPORT".

4) PROVIDE DESIGN CALCULATIONS.

5) SIGNS OR BLANKS SHALL BE INSTALLED ON THE OVERHEAD SIGN SUPPORT AT THE TIME OF ERECTION. BLANKS IF USED, SHALL BE OF THE SAME SIZE AND LOCATION AS PERMANENT SIGNS.

SIGNING NOTES

THE CONTRACTOR SHALL NOTIFY THE REGIONAL TRAFFIC UNIT, 920-492-5653, A MINIMUM OF TWO WEEKS PRIOR TO THE NEED FOR SIGN PLACEMENT TO ALLOW FOR STAKING OF ANY PERMANENT SIGNING REQUIRED ON THE PROJECT.

TYPE II SIGNS REMOVED UNDER THE CONTRACT SHALL BE DELIVERED TO THE REGIONAL TRAFFIC UNIT. SIGNS SHALL BE CAREFULLY REMOVED FROM THE SUPPORTS, SORTED BY BASE MATERIAL AND PALLETIZED BY MATERIAL TYPE. THE REGIONAL TRAFFIC UNIT 920-492-5653, SHALL BE NOTIFIED THREE WORKING DAYS PRIOR TO DELIVERY OF SIGNS.

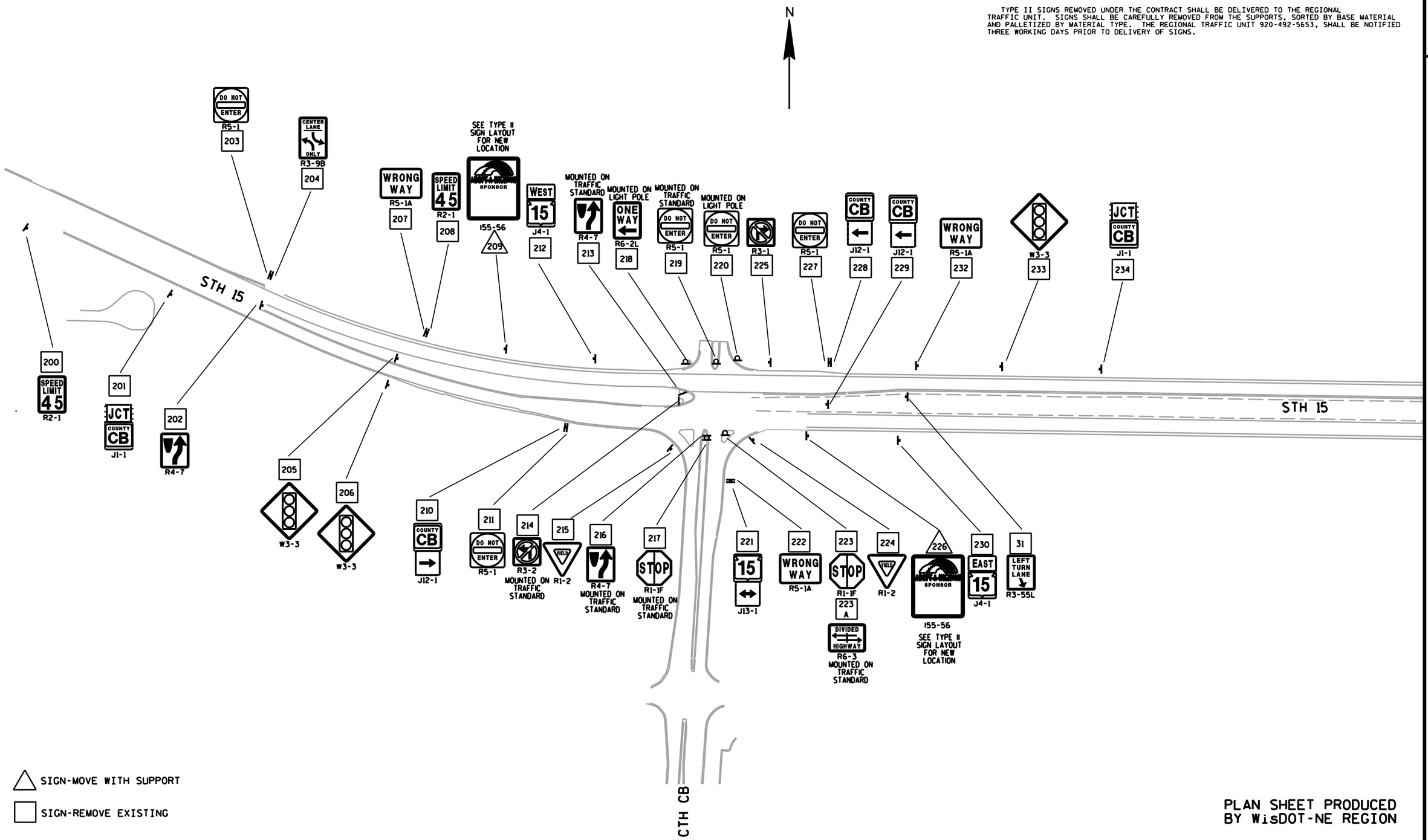

△ SIGN-MOVE WITH SUPPORT

□ SIGN-REMOVE EXISTING

PLAN SHEET PRODUCED BY WisDOT-NE REGION

PROJECT NO: 1146-39-71	HWY: STH 15	COUNTY: OUTAGAMIE	SIGNING REMOVAL PLAN	SHEET E

FILE NAME : $$....designfile....$$ PLOT DATE : $$...plottingdate...$$ PLOT BY : $$...plotuser...$$ PLOT NAME : PLOT SCALE : $$.....plotscale.....$$ WISDOT/CADDS SHEET 42

NOTES:

WISCONSIN DOT NORTHEAST REGION ELECTRICAL UNIT SHALL APPROVE FINAL LOCATIONS FOR ALL CONCRETE BASES IN THE FIELD PRIOR TO CONSTRUCTION. CONTACT THEM 3 DAYS IN ADVANCE AT (920) 492-5654 OR 492-5628.

2" DRAIN DUCT TO DITCH REQUIRED FOR ALL PULL BOXES. THIS 2" DRAIN DUCT IS INCIDENTAL TO THE PULL BOX BID ITEM.

THE LOCATION OF EXISTING AND PROPOSED UTILITIES AS SHOWN ON THE PLANS ARE APPROXIMATE. IN addition, THERE MAY BE OTHER UTILITIES WITHIN THE PROJECT AREA WHICH ARE NOT SHOWN. THE CONTRACTOR SHALL VERIFY THE LOCATIONS OF ALL UTILITIES PRIOR TO CONSTRUCTION.

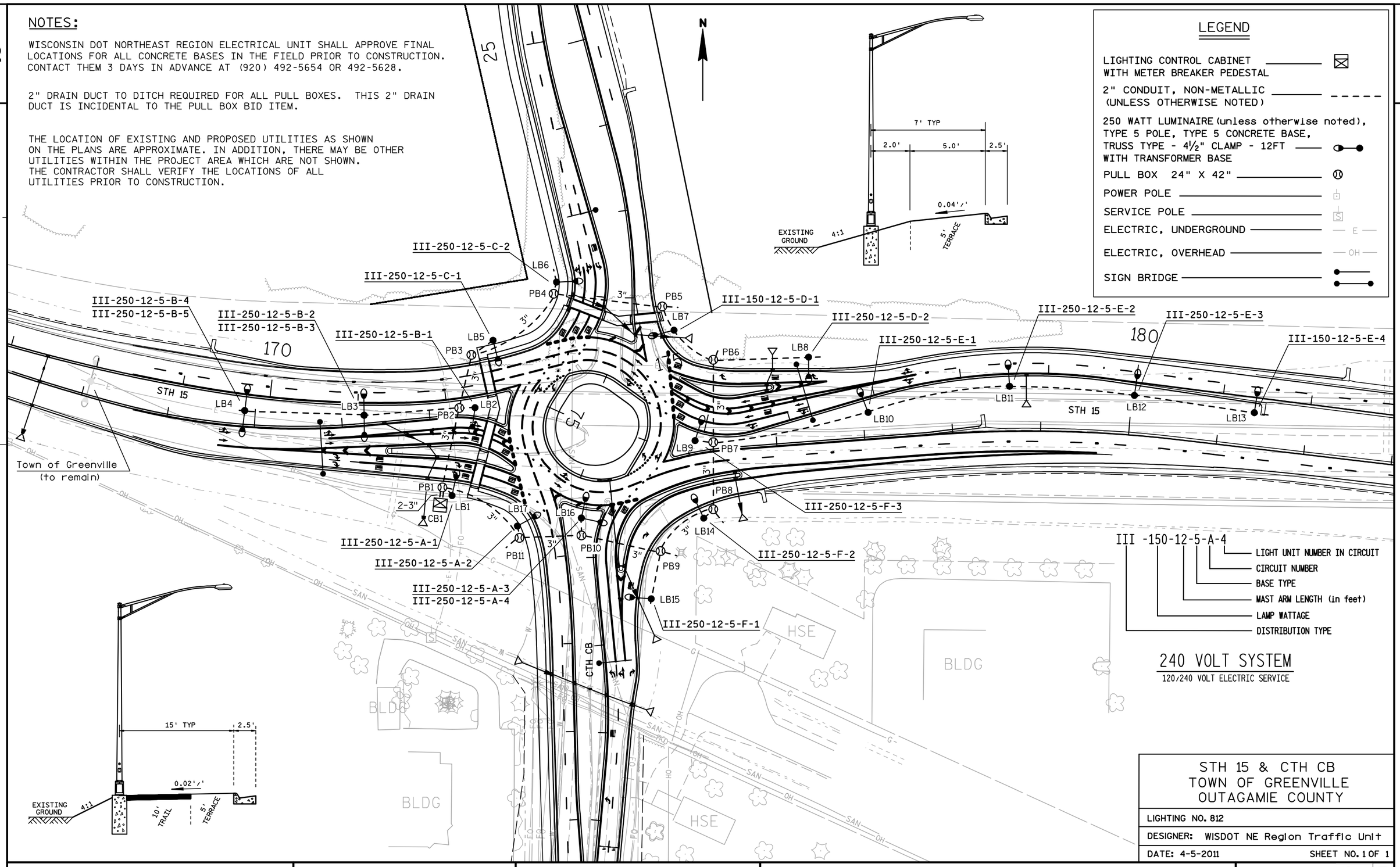

LEGEND

- LIGHTING CONTROL CABINET WITH METER BREAKER PEDESTAL
- 2" CONDUIT, NON-METALLIC (UNLESS OTHERWISE NOTED)
- 250 WATT LUMINAIRE (unless otherwise noted), TYPE 5 POLE, TYPE 5 CONCRETE BASE, TRUSS TYPE - 4½" CLAMP - 12FT WITH TRANSFORMER BASE
- PULL BOX 24" X 42"
- POWER POLE
- SERVICE POLE
- ELECTRIC, UNDERGROUND
- ELECTRIC, OVERHEAD
- SIGN BRIDGE

III -150-12-5-A-4

- LIGHT UNIT NUMBER IN CIRCUIT
- CIRCUIT NUMBER
- BASE TYPE
- MAST ARM LENGTH (in feet)
- LAMP WATTAGE
- DISTRIBUTION TYPE

240 VOLT SYSTEM

120/240 VOLT ELECTRIC SERVICE

STH 15 & CTH CB
TOWN OF GREENVILLE
OUTAGAMIE COUNTY

LIGHTING NO. 812

DESIGNER: WISDOT NE Region Traffic Unit

DATE: 4-5-2011 SHEET NO. 1 OF 1

PROJECT NO: 1146-39-71	HWY: STH 15	COUNTY: OUTAGAMIE	CONSTRUCTION DETAIL - ROUNDABOUT LIGHTING	SHEET 46 E

CONFIGURATION WITH HEAD NUMBERS				
3-V R 3 Y 5,7,8 G 11,12	3-H R Y G 2,6	3-VL R 9 Y G	3-HL R Y G 10	5-V R 1,4 Y G Y G

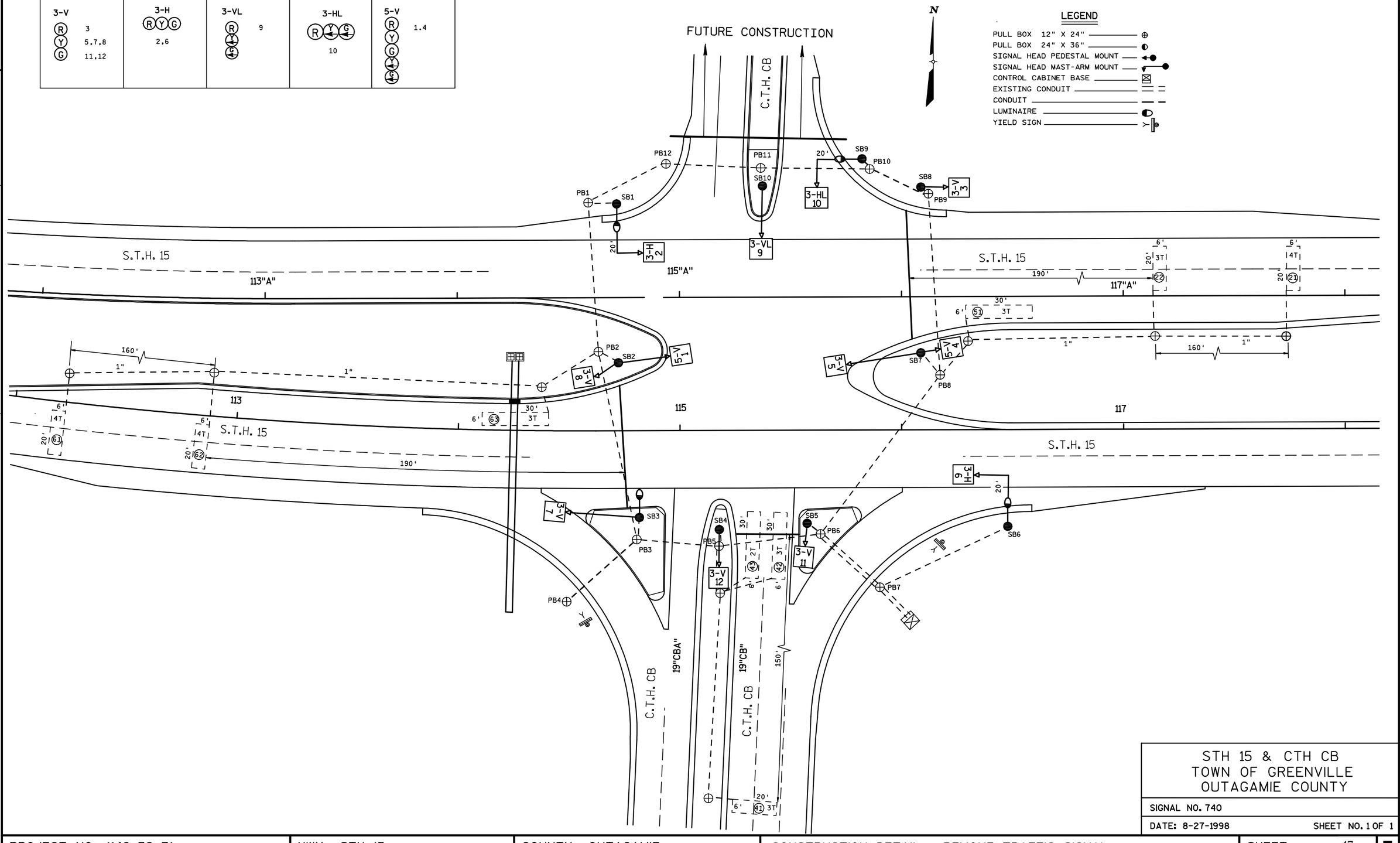

STH 15 & CTH CB TOWN OF GREENVILLE OUTAGAMIE COUNTY	
SIGNAL NO. 740	
DATE: 8-27-1998	SHEET NO. 1 OF 1

PROJECT NO: 1146-39-71	HWY: STH 15	COUNTY: OUTAGAMIE	CONSTRUCTION DETAIL - REMOVE TRAFFIC SIGNAL	SHEET 47	E

2

1 OUTLET POST

3 PULL BOXES STEEL 12x24-INCH

CONDUIT RIGID NON-METALLIC
SCHEDULE 40 2-INCH

4 ELECTRICAL SERVICE
METER BREAKER PEDESTAL

UNDERGROUND ELECTRIC
FROM UTILITY PROVIDER

2 HYDRANT & WATER LATERAL
(BY OTHERS)

N

STH 15 WB

STH 15 EB

SLOPE INTERCEPTS

CTH CB SB

CTH CB NB

COMPONENT DATA TABLE

POINT	COORDINATES X	COORDINATES Y
1	801405.479	571525.761
2	801410.479	571525.761
3	801381.137	571522.065
3	801286.924	571426.893

PROJECT NO: 1146-39-71	HWY: STH 15	COUNTY: OUTAGAMIE	CONSTRUCTION DETAIL - CENTRAL ISLAND ELECTRICAL	SHEET 48	E

FILE NAME : F:\d3_114639\021003_cd.dgn PLOT DATE : 27-JUL-2011 13:25 PLOT BY : dotmzc PLOT NAME : 021003 cd PLOT SCALE : 40.000000:1.000000

NOTE:
ALL ELECTRICAL WORK MUST COMPLY WITH SECTION 651 "GENERAL REQUIREMENTS FOR ELECTRICAL WORK", OF THE 2011 EDITION STANDARD SPECIFICATIONS FOR HIGHWAY AND STRUCTURE CONSTRUCTION.

THE PROJECT ENGINEER SHALL APPROVE THE LOCATIONS OF THE ELECTRICAL SERVICE METER BREAKER PEDESTAL AND OUTLET POST IN THE FIELD PRIOR TO CONSTRUCTION.

TOP VIEW

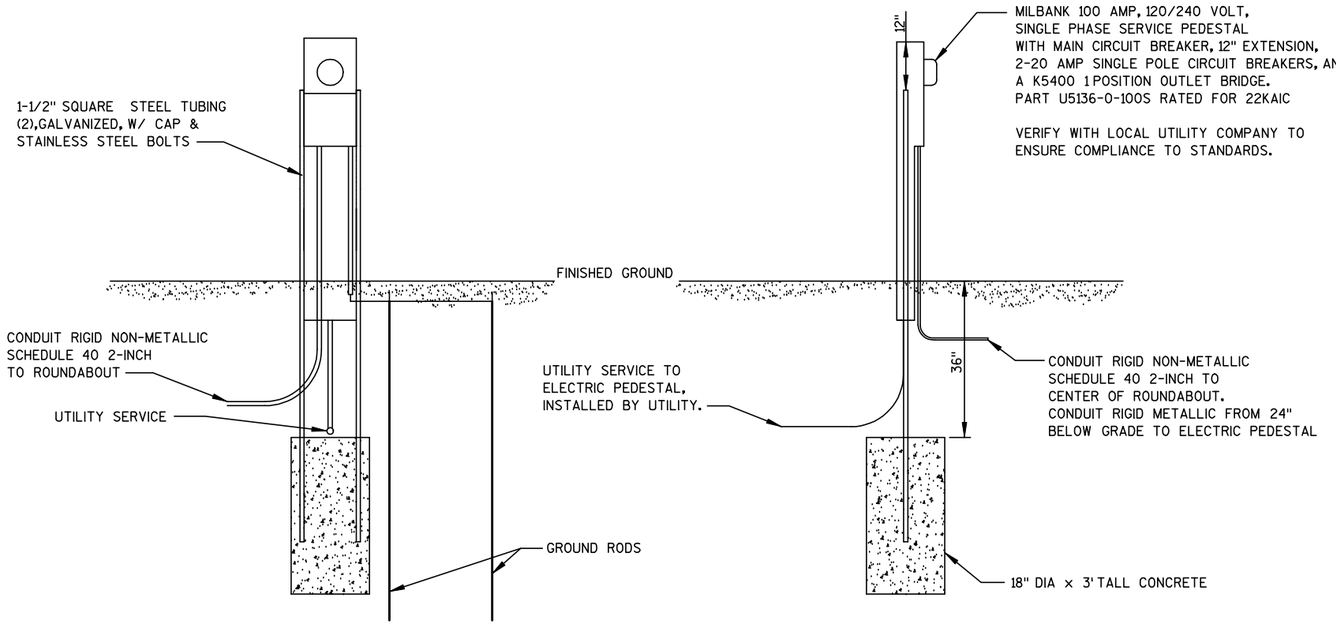

FRONT VIEW

SIDE VIEW

ELECTRICAL SERVICE METER BREAKER PEDESTAL

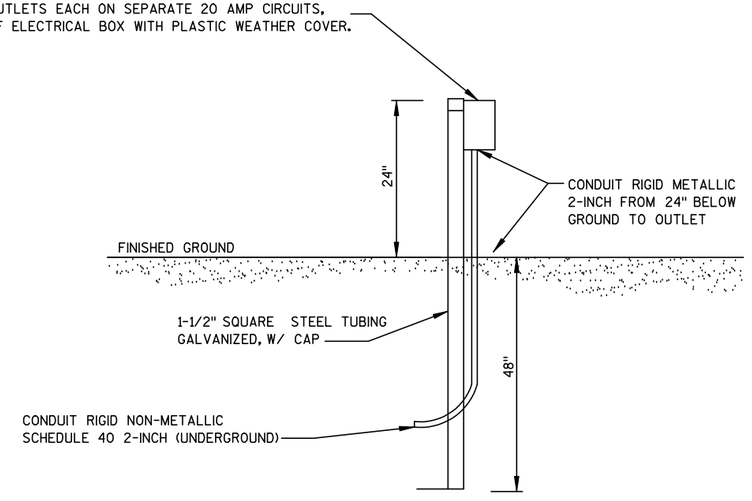

OUTLET POST IN CENTER ISLAND

PROJECT NO: 1146-39-71	HWY: STH 15	COUNTY: OUTAGAMIE	CONSTRUCTION DETAILS - CENTRAL ISLAND ELECTRICAL	SHEET 49	E

2

NOTE:
THE CONTRACTOR SHALL NOTIFY THE NE REGION TRAFFIC UNIT, 920-492-3512, A MINIMUM OF TWO WEEKS PRIOR TO THE PAVEMENT MARKING, TO ALLOW FOR THE LAYOUT OF ANY PERMANENT PAVEMENT MARKING REQUIRED ON THE PROJECT.

ALL PAVEMENT MARKING DIMENSIONS ARE FROM FLANGE OF CURB.

PAVEMENT MARKING DIMENSIONS EXITING ROUNDABOUT ALONG SPLITTER ISLANDS ARE APPROXIMATE AND LAYOUT WILL BE DETERMINED IN THE FIELD.

ALL MARKINGS ARE EPOXY UNLESS NOTED OTHERWISE.

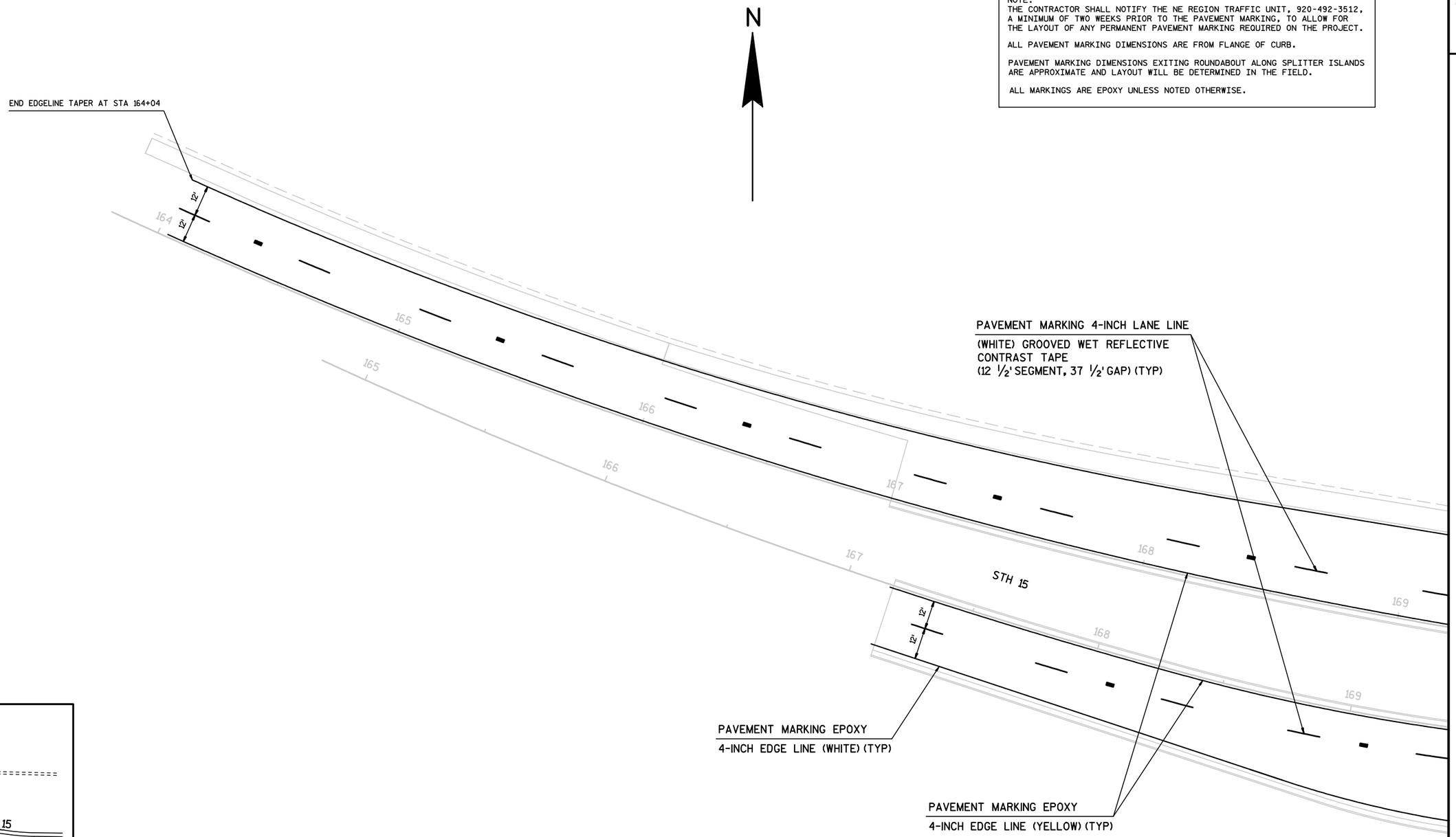

LOCATION MAP

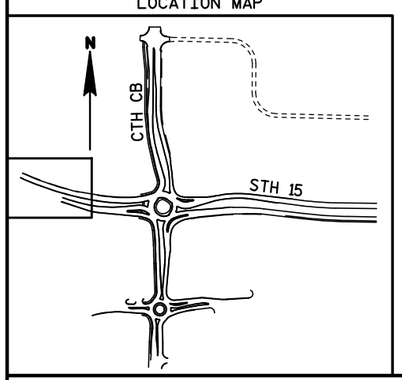

PROJECT NO: 1146-39-71	HWY: STH 15	COUNTY: OUTAGAMIE	PAVEMENT MARKING	SHEET 50	E

2

NOTE:
THE CONTRACTOR SHALL NOTIFY THE NE REGION TRAFFIC UNIT, 920-492-3512, A MINIMUM OF TWO WEEKS PRIOR TO THE PAVEMENT MARKING, TO ALLOW FOR THE LAYOUT OF ANY PERMANENT PAVEMENT MARKING REQUIRED ON THE PROJECT.

ALL PAVEMENT MARKING DIMENSIONS ARE FROM FLANGE OF CURB.

PAVEMENT MARKING DIMENSIONS EXITING ROUNDABOUT ALONG SPLITTER ISLANDS ARE APPROXIMATE AND LAYOUT WILL BE DETERMINED IN THE FIELD.

ALL MARKINGS ARE EPOXY UNLESS NOTED OTHERWISE.

PAVEMENT MARKING GROOVED
PREFORMED THERMOPLASTIC
ARROWS TYPE 3R (WHITE) (TYP)

PAVEMENT MARKING 4-INCH LANE LINE
(WHITE) GROOVED WET REFLECTIVE
CONTRAST TAPE
(12 ½' SEGMENT, 37 ½' GAP) (TYP)

PAVEMENT MARKING GROOVED DIAGONAL
PREFORMED THERMOPLASTIC 12-INCH (TYP)

PAVEMENT MARKING 8-INCH LINE (WHITE)
GROOVED WET REFLECTIVE TAPE (TYP)

PAVEMENT MARKING 8-INCH (WHITE
SKIP) GROOVED PREFORMED THERMOPLASTIC
(8" SEGMENT, 9' GAP) (TYP)

PAVEMENT MARKING 8-INCH (WHITE
SKIP) GROOVED PREFORMED THERMOPLASTIC
(1' SEGMENT, 4' GAP) (TYP)

PAVEMENT MARKING 8-INCH LINE
(WHITE) GROOVED PREFORMED THERMOPLASTIC
5' PAST CURB RADUIS (TYP)

PAVEMENT MARKING 8-INCH (WHITE)
GROOVED PREFORMED THERMOPLASTIC (TYP)

PAVEMENT MARKING 8-INCH (WHITE)
GROOVED PREFORMED
THERMOPLASTIC CROSSWALK (TYP)

PAVEMENT MARKING 8-INCH
(WHITE) GROOVED PREFORMED
THERMOPLASTIC (TYP)

END AT +32

+32

169 170 171 172

STH 15

CTH CB

12' 12' 12'

25' C-C
(TYP)

45°

9' 9' 10' 10'

+60 +83 +28

PAVEMENT MARKING EPOXY
4-INCH EDGE LINE (YELLOW) (TYP)

PAVEMENT MARKING 8-INCH CHANNELIZING
LINE (WHITE SOLID) GROOVED WET
REFLECTIVE TAPE (STA 169+60 - 170+08)

PAVEMENT MARKING 8-INCH LINE (WHITE)
GROOVED WET REFLECTIVE TAPE (TYP)

PAVEMENT MARKING 4-INCH (WHITE)
GROOVED WET REFLECTIVE TAPE
(12 ½' SEGMENT, 12 ½' GAP)

PAVEMENT MARKING GROOVED
PREFORMED THERMOPLASTIC
WORDS (WHITE) (TYP)

PAVEMENT MARKING EPOXY
4-INCH EDGE LINE (WHITE) (TYP)

PAVEMENT MARKING 8-INCH CHANNELIZING
LINE (WHITE SOLID) GROOVED WET
REFLECTIVE TAPE (TYP)

PAVEMENT MARKING GROOVED
PREFORMED THERMOPLASTIC
ARROWS TYPE 2 (WHITE) (TYP)

PAVEMENT MARKING GROOVED
PREFORMED THERMOPLASTIC
WORDS (WHITE) (TYP)

PAVEMENT MARKING 24-INCH (WHITE)
GROOVED PREFORMED THERMOPLASTIC
YIELD LINE (2' SEGMENT, 2' GAP) (TYP)

PAVEMENT MARKING GROOVED
PREFORMED THERMOPLASTIC
ARROWS TYPE 1 (WHITE) (TYP)

PAVEMENT MARKING 8-INCH (WHITE
SKIP) GROOVED PREFORMED THERMOPLASTIC
(6' SEGMENT, 3' GAP) (TYP)

LOCATION MAP

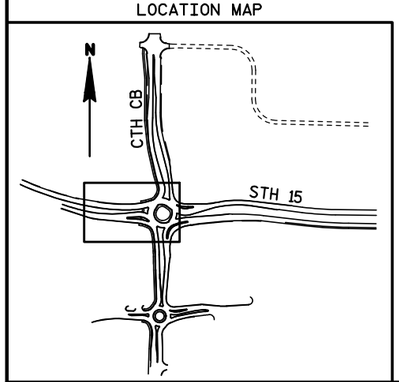

N

2

PROJECT NO: 1146-39-71	HWY: STH 15	COUNTY: OUTAGAMIE	PAVEMENT MARKING	SHEET 51 E

NOTE:
THE CONTRACTOR SHALL NOTIFY THE NE REGION TRAFFIC UNIT, 920-492-3512, A MINIMUM OF TWO WEEKS PRIOR TO THE PAVEMENT MARKING, TO ALLOW FOR THE LAYOUT OF ANY PERMANENT PAVEMENT MARKING REQUIRED ON THE PROJECT.

ALL PAVEMENT MARKING DIMENSIONS ARE FROM FLANGE OF CURB.

PAVEMENT MARKING DIMENSIONS EXITING ROUNDABOUT ALONG SPLITTER ISLANDS ARE APPROXIMATE AND LAYOUT WILL BE DETERMINED IN THE FIELD.

ALL MARKINGS ARE EPOXY UNLESS NOTED OTHERWISE.

N

PAVEMENT MARKING 8-INCH LINE (WHITE)
GROOVED WET REFLECTIVE TAPE (TYP)

PAVEMENT MARKING GROOVED DIAGONAL
PREFORMED THERMOPLASTIC 12-INCH (TYP)

PAVEMENT MARKING (WHITE)
GROOVED PREFORMED THERMOPLASTIC YIELD LINE (2' SEGMENT, 2' GAP) (TYP)

PAVEMENT MARKING 4-INCH (WHITE)
GROOVED WET REFLECTIVE TAPE
(12½' SEGMENT, 12½" GAP)
(STA 176+00 - 176+25)

PAVEMENT MARKING GROOVED
PREFORMED THERMOPLASTIC WORDS (WHITE) (TYP)

PAVEMENT MARKING 8-INCH LINE (WHITE)
GROOVED WET REFLECTIVE TAPE (TYP)

PAVEMENT MARKING GROOVED
PREFORMED THERMOPLASTIC ARROWS TYPE 3 (WHITE) (TYP)

PAVEMENT MARKING GROOVED
PREFORMED THERMOPLASTIC ARROWS TYPE 2 (WHITE) (TYP)

START AT 177+50

25' C-C (TYP)

45°

STH 15

END AT 178+44

176+91

PAVEMENT MARKING EPOXY
4-INCH EDGE LINE (WHITE) (TYP)

PAVEMENT MARKING 4-INCH LANE LINE
(WHITE) GROOVED WET REFLECTIVE CONTRAST TAPE
(12 ½' SEGMENT, 37 ½' GAP) (TYP)

PAVEMENT MARKING 8-INCH LINE
(WHITE) GROOVED WET REFLECTIVE CONTRAST TAPE (175+54 - 176+91.3)

PAVEMENT MARKING EPOXY
4-INCH EDGE LINE (YELLOW) (TYP)

PAVEMENT MARKING 8-INCH CHANNELIZING
LINE (WHITE SOLID) GROOVED WET REFLECTIVE TAPE (TYP)

PAVEMENT MARKING 8-INCH LANE LINE
(WHITE) GROOVED WET REFLECTIVE CONTRAST TAPE (3' SEGMENT, 9' GAP)
(STA 176+91.3 - 178+44)

~~PAVEMENT MARKING 8-INCH LINE (WHITE) GROOVED WET REFLECTIVE TAPE (END AT STA 175+54)~~

PAVEMENT MARKING 8-INCH (WHITE)
GROOVED PREFORMED THERMOPLASTIC (TYP)

PAVEMENT MARKING GROOVED
PREFORMED THERMOPLASTIC ARROWS TYPE 1 (WHITE) (TYP)

PAVEMENT MARKING 8-INCH LINE
(WHITE) GROOVED PREFORMED THERMOPLASTIC 5' PAST CURB RADUIS (TYP)

PAVEMENT MARKING GROOVED
PREFORMED THERMOPLASTIC ARROWS TYPE 3R (WHITE) (TYP)

LOCATION MAP

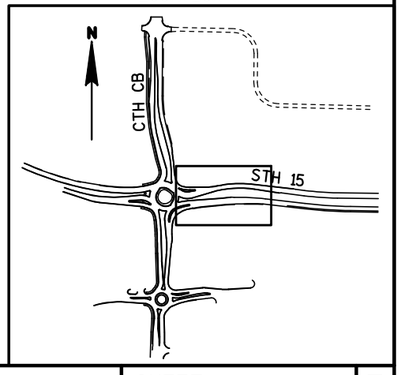

PROJECT NO: 1146-39-71	HWY: STH 15	COUNTY: OUTAGAMIE	PAVEMENT MARKING	SHEET 52 E

2

NOTE:
THE CONTRACTOR SHALL NOTIFY THE NE REGION TRAFFIC UNIT, 920-492-3512, A MINIMUM OF TWO WEEKS PRIOR TO THE PAVEMENT MARKING, TO ALLOW FOR THE LAYOUT OF ANY PERMANENT PAVEMENT MARKING REQUIRED ON THE PROJECT.

ALL PAVEMENT MARKING DIMENSIONS ARE FROM FLANGE OF CURB.

PAVEMENT MARKING DIMENSIONS EXITING ROUNDABOUT ALONG SPLITTER ISLANDS ARE APPROXIMATE AND LAYOUT WILL BE DETERMINED IN THE FIELD.

ALL MARKINGS ARE EPOXY UNLESS NOTED OTHERWISE.

N

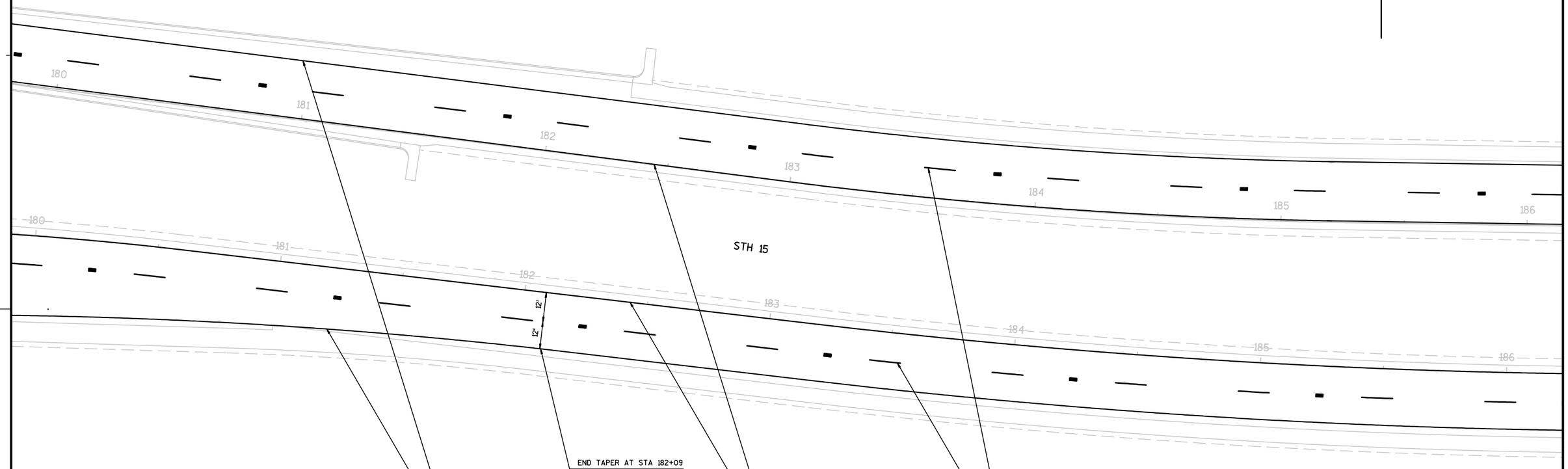

LOCATION MAP

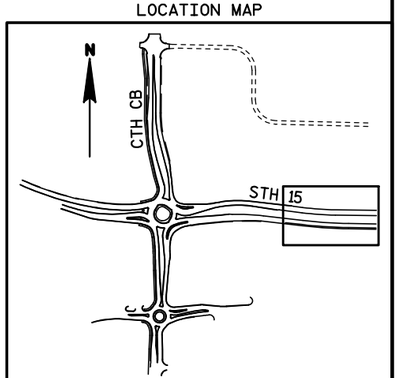

PROJECT NO: 1146-39-71	HWY: STH 15	COUNTY: OUTAGAMIE	PAVEMENT MARKING	SHEET 53	E

NOTE:
THE CONTRACTOR SHALL NOTIFY THE NE REGION TRAFFIC UNIT, 920-492-3512, A MINIMUM OF TWO WEEKS PRIOR TO THE PAVEMENT MARKING, TO ALLOW FOR THE LAYOUT OF ANY PERMANENT PAVEMENT MARKING REQUIRED ON THE PROJECT.

ALL PAVEMENT MARKING DIMENSIONS ARE FROM FLANGE OF CURB.

PAVEMENT MARKING DIMENSIONS EXITING ROUNDABOUT ALONG SPLITTER ISLANDS ARE APPROXIMATE AND LAYOUT WILL BE DETERMINED IN THE FIELD.

ALL MARKINGS ARE EPOXY UNLESS NOTED OTHERWISE.

N

PAVEMENT MARKING 8-INCH (WHITE
SKIP) GROOVED PREFORMED THERMOPLASTIC
(8" SEGMENT, 9' GAP) (TYP)

PAVEMENT MARKING 8-INCH LINE
(WHITE) GROOVED PREFORMED THERMOPLASTIC
5' PAST CURB RADUIS (TYP)

PAVEMENT MARKING 8-INCH (WHITE)
GROOVED PREFORMED THERMOPLASTIC (TYP)

PAVEMENT MARKING 8-INCH (WHITE)
GROOVED PREFORMED THERMOPLASTIC (TYP)

PAVEMENT MARKING EPOXY 4-INCH LANE LINE
(WHITE) (12 ½' SEGMENT, 37 ½' GAP) (TYP)

PAVEMENT MARKING 8-INCH CHANNELIZING
LINE (WHITE SOLID) GROOVED WET
REFLECTIVE TAPE (TYP)

PAVEMENT MARKING EPOXY
4-INCH EDGE LINE (YELLOW) (TYP)

PAVEMENT MARKING EPOXY
4-INCH EDGE LINE (WHITE) (TYP)

PAVEMENT MARKING GROOVED
PREFORMED THERMOPLASTIC
ARROWS TYPE 2R (WHITE) (TYP)

CTH CB

STH 15

YIELD

25' C-C
(TYP)
45°

PAVEMENT MARKING GROOVED
PREFORMED THERMOPLASTIC
ARROWS TYPE 3 (WHITE) (TYP)

PAVEMENT MARKING GROOVED
PREFORMED THERMOPLASTIC
ARROWS TYPE 2 (WHITE) (TYP)

PAVEMENT MARKING GROOVED
PREFORMED THERMOPLASTIC
WORDS (WHITE) (TYP)

PAVEMENT MARKING 8-INCH CHANNELIZING
LINE (WHITE SOLID) GROOVED WET
REFLECTIVE TAPE (STA 17+80 - 18+15)

PAVEMENT MARKING 8-INCH LINE (WHITE)
GROOVED WET REFLECTIVE TAPE (TYP)

PAVEMENT MARKING GROOVED DIAGONAL
PREFORMED THERMOPLASTIC 12-INCH (TYP)

PAVEMENT MARKING GROOVED
PREFORMED THERMOPLASTIC
WORDS (WHITE) (TYP)

PAVEMENT MARKING (WHITE)
GROOVED PREFORMED THERMOPLASTIC
YIELD LINE (2' SEGMENT, 2' GAP) (TYP)

PAVEMENT MARKING 8-INCH LINE (WHITE)
GROOVED WET REFLECTIVE TAPE (TYP)

PAVEMENT MARKING 8-INCH (WHITE SKIP)
GROOVED PREFORMED THERMOPLASTIC
(1' SEGMENT, 4' GAP) (TYP)

PAVEMENT MARKING 8-INCH (WHITE SKIP)
GROOVED PREFORMED THERMOPLASTIC
(6' SEGMENT, 3' GAP) (TYP)

LOCATION MAP

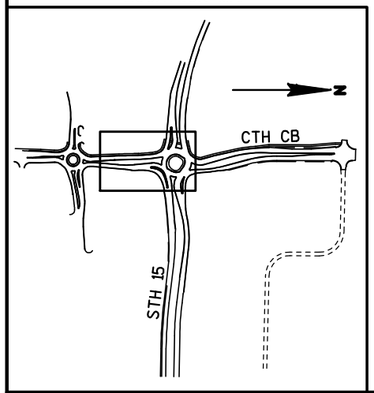

PROJECT NO: 1146-39-71	HWY: STH 15	COUNTY: OUTAGAMIE	PAVEMENT MARKING	SHEET 54 E

FILE NAME : F:\d3_114639\024503_pm.dgn PLOT DATE : 27-JUL-2011 13:25 PLOT BY : dotmzc PLOT NAME : 024503 pm PLOT SCALE : 40.000000:1.000000
WISDOT/CADDS SHEET 42

NOTE:
THE CONTRACTOR SHALL NOTIFY THE NE REGION TRAFFIC UNIT, 920-492-3512, A MINIMUM OF TWO WEEKS PRIOR TO THE PAVEMENT MARKING, TO ALLOW FOR THE LAYOUT OF ANY PERMANENT PAVEMENT MARKING REQUIRED ON THE PROJECT.

ALL PAVEMENT MARKING DIMENSIONS ARE FROM FLANGE OF CURB.

PAVEMENT MARKING DIMENSIONS EXITING ROUNDABOUT ALONG SPLITTER ISLANDS ARE APPROXIMATE AND LAYOUT WILL BE DETERMINED IN THE FIELD.

ALL MARKINGS ARE EPOXY UNLESS NOTED OTHERWISE.

N

PAVEMENT MARKING GROOVED
PREFORMED THERMOPLASTIC WORDS (WHITE) (TYP)

PAVEMENT MARKING 8-INCH (WHITE)
GROOVED PREFORMED THERMOPLASTIC CROSSWALK (TYP)

PAVEMENT MARKING GROOVED
PREFORMED THERMOPLASTIC ARROWS TYPE 3 (WHITE) (TYP)

PAVEMENT MARKING EPOXY
4-INCH EDGE LINE (WHITE) (TYP)

CTH CB

PAVEMENT MARKING EPOXY 4-INCH LANE LINE
(WHITE) (12 ½' SEGMENT, 37 ½' GAP) (TYP)

PAVEMENT MARKING EPOXY 4-INCH
(WHITE) (12½' SEGMENT, 12½' GAP)
(STA 23+00 - 23+34)

PAVEMENT MARKING GROOVED
PREFORMED THERMOPLASTIC ARROWS TYPE 2R (WHITE) (TYP)

PAVEMENT MARKING GROOVED
PREFORMED THERMOPLASTIC WORDS (WHITE) (TYP)

PAVEMENT MARKING EPOXY
4-INCH EDGE LINE (YELLOW) (TYP)

PAVEMENT MARKING 8-INCH CHANNELIZING
LINE (WHITE SOLID) GROOVED WET REFLECTIVE TAPE (TYP)

PAVEMENT MARKING 8-INCH (WHITE)
GROOVED PREFORMED THERMOPLASTIC (TYP)

PAVEMENT MARKING 8-INCH (WHITE)
GROOVED PREFORMED THERMOPLASTIC (TYP)

PAVEMENT MARKING 8-INCH LINE (WHITE)
GROOVED PREFORMED THERMOPLASTIC 5' PAST CURB RADIUS (TYP)

LOCATION MAP

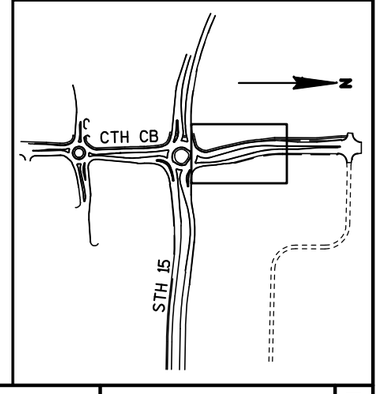

PROJECT NO: 1146-39-71	HWY: STH 15	COUNTY: OUTAGAMIE	PAVEMENT MARKING	SHEET 55	E

NOTE:
THE CONTRACTOR SHALL NOTIFY THE NE REGION TRAFFIC UNIT, 920-492-3512, A MINIMUM OF TWO WEEKS PRIOR TO THE PAVEMENT MARKING, TO ALLOW FOR THE LAYOUT OF ANY PERMANENT PAVEMENT MARKING REQUIRED ON THE PROJECT.

ALL PAVEMENT MARKING DIMENSIONS ARE FROM FLANGE OF CURB.

PAVEMENT MARKING DIMENSIONS EXITING ROUNDABOUT ALONG SPLITTER ISLANDS ARE APPROXIMATE AND LAYOUT WILL BE DETERMINED IN THE FIELD.

ALL MARKINGS ARE EPOXY UNLESS NOTED OTHERWISE.

N

PAVEMENT MARKING EPOXY
4-INCH EDGE LINE (YELLOW) (TYP)

PAVEMENT MARKING ISLAND
NOSE EPOXY (YELLOW) (TYP)

CTH CB

PAVEMENT MARKING EPOXY 4-INCH LANE LINE
(WHITE) (12 ½' SEGMENT, 37 ½' GAP) (TYP)

PAVEMENT MARKING EPOXY
4-INCH EDGE LINE (WHITE) (TYP)

PAVEMENT MARKING EPOXY
8-INCH LANE LINE (WHITE)

~~FUTURE~~ NEUBERT RD
~~(BY OTHERS)~~

LOCATION MAP

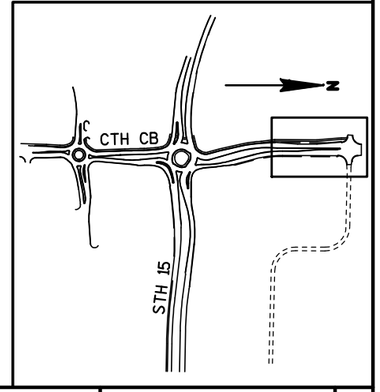

PROJECT NO: 1146-39-71	HWY: STH 15	COUNTY: OUTAGAMIE	PAVEMENT MARKING	SHEET 56 E

N

USE SDD "TRAFFIC CONTROL ADVANCE WARNING SIGNS 45 mph OR GREATER, TWO WAY UNDIVIDED ROAD OPEN TO TRAFFIC"
REPLACE W20-1 SERIES WITH W20-3 SERIES

GREENWOOD DRIVE

EASTBOUND LANES

USE SDD "BARRICADES & SIGNS FOR MAINLINE CLOSURE" DETAIL D

STH 15

CTH CB

USE SDD "TRAFFIC CONTROL ADVANCE WARNING SIGNS 45 mph OR GREATER, TWO WAY UNDIVIDED ROAD OPEN TO TRAFFIC"
REPLACE W20-1 SERIES WITH W20-3 SERIES

WESTBOUND LANES

MAYFLOWER DRIVE

USE SDD "BARRICADES & SIGNS FOR MAINLINE CLOSURE" DETAIL D

5

5

PROJECT NO: 1146-39-71	HWY: STH 15	COUNTY: OUTAGAMIE	TRAFFIC CONTROL STH 15	SHEET 57	E

2

N

REFER TO SDD "BARRICADES AND SIGNS FOR MAINLINE CLOSURES". - DETAIL D (ROAD CLOSURE BARRICADE DETAIL)

REFER TO SDD "BARRICADES AND SIGNS FOR MAINLINE CLOSURES". - DETAIL D (ROAD CLOSURE BARRICADE DETAIL)

CTH CB

STH 15

STH 15

COVER

ONLY

10' (TYP)

15' (TYP)

SYMBOLS

- DRUM
- DIRECTION OF TRAFFIC FLOW
- TYPE III BARRICADE WITH TYPE A WARNING LIGHTS

PROJECT NO: 1146-39-71	HWY: STH 15	COUNTY: OUTAGAMIE	TRAFFIC CONTROL DETAIL	SHEET 58	E

2

CIRCULATORY CONST ℄ (CIRC1)

EDJ9 77 PC 77+85.70 PT 78+48.82 PCC 78+43.33 EDJ10 PT 77+47.65 EDJ8 PCC 77+44.07 EDJ7 PC 76+87.38 77 PT 76+56.39 EDJ6 PCC 76+52.78 EDJ5 76 PCC 75+59.81 EDJ4 PC 75+00.00 R PT 78+89.02 PC 78+80.98 EDJ11

PI 33+76.77

PI 33+76.59

31+74.43 CTH CB =
1+47.53 NEUBERT RD

0

5

NEUBERT RD (BY OTHERS)

31+75.02 CTH CB =
1+23.52 NEUBERT RD

30

CTH CB

CTH CB SOUTHBOUND CONST ℄ (PRLSBCB1)

CTH CB NORTHBOUND CONST ℄ (PRLNBCB1)

PC 6+44.14 PT 8+77.22 10 PC 10+69.96 PT 13+03.04

PT 27+31.39 NEW10 PT 26+40.85 PC 25+39.19 NEW4 PC 24+16.45 25 PT 23+67.49 PT 22+48.45 PC 21+97.99 NEW25 PC 21+61.51 NEW9 NEW29 PT 21+86.45 PC 21+54.57

PC 174+70.18 PT 175+58.05

PI DATA TABLE (NEUB1)

STATION	COORDINATES X	Y
0+00	801,215.896	572,640.563
3+00	801,515.812	572,633.483

N

PI DATA TABLE (PRL15EB1)

STATION	COORDINATES X	Y
188+05.99	802,814.307	571,457.718

PI DATA TABLE (PRL15WB1)

STATION	COORDINATES X	Y
187+98.92	802,815.216	571,517.711

PC 163+80.67 PC 164+81.96 165 STH 15 WESTBOUND CONST ℄ (PRL15WB1) PCC 168+37.34 PCC 169+32.38 170 PT 171+24.91 PCC 171+55.32 PT 172+70.01 PRL12 PRL6 STH 15 PRL13 PRL14 PRL7 PRL8 STH 15 EASTBOUND CONST ℄ (PRL15EB1) PC 172+22.83 PT 172+85.05 175 T5 EH1 EH2 PRL9 PRL10 PRL11 EH3 180 PC 183+07.60 PC 183+22.16 185 PT 185+28.71 PT 186+23.36 PC 174+85.02 PT 175+43.57 PC 176+98.89 PC 177+70.67 PT 179+61.44 PT 180+58.59 STH 15 WESTBOUND CONST ℄ (PRL15WB1) STH 15 EASTBOUND CONST ℄ (PRL15EB1) PI 188+05.99 PI 187+98.52

PI 19+55.53 NEW26 PT 19+52.48 PC 18+91.92 PT 19+17.38 NEW2 PC 17+96.61 PT 17+78.14 NEW6 PC 16+67.67 PT 16+46.59 CTH CB NORTHBOUND CONST ℄ (PRLNBCB1) CTH CB SOUTHBOUND CONST ℄ (PRLSBCB1) NEW1 PC 16+06.78 15 PI 15+00.00 NEW5 PT 15+15.64 PC 14+42.03

PI DATA TABLE (PRLSBCB1)

STATION	COORDINATES X	Y
16+50	801,383.947	571,129.611
19+55.53	801,364.838	571,434.249
33+76.72	801,340.727	572,839.390

PI DATA TABLE (PRLNBCB1)

STATION	COORDINATES X	Y
16+50	801,415.879	571,128.180
33+76.59	801,364.726	572,839.231

LEGEND

CURVE NUMBER

PROJECT NO: 1146-39-71	HWY: STH 15	COUNTY: OUTAGAMIE	ALIGNMENT DIAGRAM (PRIMARY)	SHEET 59 E

2

CTH CB SOUTHBOUND (PRLSBCB1)

NEW1 CURVE NOTES

PI = 16+26.69
Y = 571,106.299
X = 801,384.568
∠ = 182°-51'-04"
Δ = 2°-51'-04"
D = 7°-09'-43"
T = 19.91'
L = 39.81'
R = 800.00'

NEW2 CURVE NOTES

PI = 18+57.05
Y = 571,336.591
X = 801,378.428
∠ = 173°-36'-17"
Δ = 6°-23'-43"
D = 5°-17'-43"
T = 60.45'
L = 120.77'
R = 1082.00'

NEW25 CURVE NOTES

PI = 22+07.39
Y = 571,676.752
X = 801,426.709
∠ = 134°-43'-04"
Δ = 45°-16'-56"
D = 52°-05'-14"
T = 45.88'
L = 86.94'
R = 110.00'

NEW4 CURVE NOTES

PI = 25+29.43
Y = 571,990.505
X = 801,335.085
∠ = 196°-30'-16"
Δ = 16°-30'-16"
D = 7°-21'-18"
T = 112.98'
L = 224.40'
R = 779.00'
RUNOFF = 115'
S.E. TRANSITION = 175'
SE = .029%

STH 15 EASTBOUND (PRL15EB1)

PRL6 CURVE NOTES

PI = 166+60.07
Y = 571,598.151
X = 800,686.193
∠ = 170°-20'-21"
Δ = 9°-39'-39"
D = 2°-43'-06"
T = 178.11'
L = 355.38'
R = 2107.68'
SE = .043%

PRL7 CURVE NOTES

PI = 169+82.66
Y = 571,514.064
X = 800,998.499
∠ = 159°-39'-30"
Δ = 20°-20'-30"
D = 7°-04'-25"
T = 145.32'
L = 287.57'
R = 810.00'
RUNOFF = 142'
S.E. TRANSITION = 200'
SE = .042%

PRL8 CURVE NOTES

PI = 172+54.71
Y = 571,539.344
X = 801,272.446
∠ = 210°-43'-55"
Δ = 30°-43'-55"
D = 49°-23'-35"
T = 31.88'
L = 62.22'
R = 116.00'

PRL9 CURVE NOTES

PI = 175+14.38
Y = 571,497.581
X = 801,526.340
∠ = 190°-45'-05"
Δ = 10°-45'-05"
D = 18°-21'-51"
T = 29.36'
L = 58.55'
R = 312.00'

PRL10 CURVE NOTES

PI = 179+15.08
Y = 571,527.719
X = 801,926.073
∠ = 190°-59'-52"
Δ = 10°-59'-52"
D = 3°-49'-11"
T = 144.41'
L = 287.92'
R = 1500.00'
RUNOFF = 130'
S.E. TRANSITION = 202'
SE = .039%

PRL11 CURVE NOTES

PI = 184+72.89
Y = 571,462.784
X = 802,480.983
∠ = 174°13'-42"
Δ = 5°-46'-18"
D = 1°-54'-59"
T = 150.73'
L = 301.19'
R = 2990.00'
RUNOFF = 97'
S.E. TRANSITION = 169'
SE = .029%

STH 15 WESTBOUND (PRL15WB1)

PRL12 CURVE NOTES

PI = 166+58.22
Y = 571,613.152
X = 800,695.522
∠ = 164°-31'-11"
Δ = 15°-28'-49"
D = 2°-48'-21"
T = 277.55'
L = 551.71'
R = 2042.00'
RUNOFF = 151'
S.E. TRANSITION = 223'
SE = .042%

PRL13 CURVE NOTES

PI = 170+44.19
Y = 571,549.916
X = 801,079.705
∠ = 169°-09'-23"
Δ = 10°-50'-37"
D = 4°-51'-50"
T = 111.81'
L = 222.94'
R = 1178.00'

PRL14 CURVE NOTES

PI = 172+12.90
Y = 571,554.340
X = 801,249.024
∠ = 167°-26'-11"
Δ = 12°-33'-49"
D = 10°-57'-19"
T = 57.57'
L = 114.68'
R = 523.00'

EH1 CURVE NOTES

PI = 175+16.61
Y = 571,507.882
X = 801,541.952
∠ = 134°-13'-54"
Δ = 45°-46'-06"
D = 52°-05'-14"
T = 46.43'
L = 87.87'
R = 110.00'

EH2 CURVE NOTES

PI = 178+29.11
Y = 571,597.876
X = 801,846.419
∠ = 203°-40'-18"
Δ = 23°-40'-18"
D = 8°-48'-53"
T = 136.22'
L = 268.55'
R = 650.00'
RUNOFF = 71'
S.E. TRANSITION = 123'
SE = 0.027%

EH3 CURVE NOTES

PI = 184+18.27
Y = 571,523.494
X = 802,434.776
∠ = 173°-39'-56"
Δ = 6°-20'-04"
D = 2°-51'-53"
T = 110.67'
L = 221.11'
R = 2000.00'
RUNOFF = 188'
S.E. TRANSITION = 265'
SE = .035%

CTH CB NORTHBOUND (PRLNBCB1)

NEW5 CURVE NOTES

PI = 14+79.11
Y = 570,957.413
X = 801,400.721
∠ = 197°-00'-20"
Δ = 17°-00'-20"
D = 23°-06'-11"
T = 37.08'
L = 73.61'
R = 248.00'

NEW6 CURVE NOTES

PI = 17+23.06
Y = 571,200.955
X = 801,422.339
∠ = 169°-27'-04"
Δ = 10°-32'-56"
D = 9°-32'-58"
T = 55.39'
L = 110.47'
R = 600.00'

NEW26 CURVE NOTES

PI = 19+22.99
Y = 571,400.286
X = 801,403.228
∠ = 211°-32'-41"
Δ = 31°-32'-41"
D = 52°-05'-14"
T = 31.07'
L = 60.56'
R = 110.00'

NEW24 CURVE NOTES

PI = 21+70.57
Y = 571,642.699
X = 801,449.577
∠ = 192°-10'-37"
Δ = 12°-10'-37"
D = 38°-11'-50"
T = 16.00'
L = 31.88'
R = 150.00'

NEW9 CURVE NOTES

PI = 22+83.23
Y = 571,755.470
X = 801,449.920
∠ = 165°-03'-32"
Δ = 14°-56'-28"
D = 8°-48'-53"
T = 85.23'
L = 169.50'
R = 650.00'

NEW10 CURVE NOTES

PI = 26+35.85
Y = 572,097.384
X = 801,359.796
∠ = 195°-08'-50"
Δ = 15°-08'-50"
D = 7°-52'-52"
T = 96.66'
L = 192.20'
R = 727.00'
SE = R.C.

STH 15 & CTH CB ROUNDABOUT (CIRC1)

EDJ4 CURVE NOTES

PI = 75+32.93
Y = 571,518.534
X = 801,338.054
∠ = 120°-24'-18"
Δ = 59°-35'-42"
D = 99°-38'-41"
T = 32.93'
L = 59.81'
R = 57.50'

EDJ5 CURVE NOTES

PI = 76+15.29
Y = 571,446.683
X = 801,389.561
∠ = 101°-22'-25"
Δ = 78°-37'-35"
D = 84°-34'-14"
T = 55.48'
L = 92.97'
R = 67.75'

EDJ6 CURVE NOTES

PI = 76+54.64
Y = 571,470.245
X = 801,441.839
∠ = 145°-28'-10"
Δ = 34°-31'-50"
D = 954°-55'-47"
T = 1.87'
L = 3.62'
R = 6.00'

EDJ7 CURVE NOTES

PI = 77+17.77
Y = 571,524.335
X = 801,474.608
∠ = 128°-51'-00"
Δ = 51°-09'-01"
D = 90°-13'-47"
T = 30.39'
L = 56.69'
R = 63.5'

EDJ8 CURVE NOTES

PI = 77+45.91
Y = 571,554.636
X = 801,463.613
∠ = 145°-50'-06"
Δ = 34°-09'-54"
D = 954°-55'-47"
T = 1.84'
L = 3.58'
R = 6.00'

EDJ9 CURVE NOTES

PI = 78+16.91
Y = 571,596.321
X = 801,406.013
∠ = 125°-27'-09"
Δ = 54°-32'-51"
D = 94°-39'-29"
T = 31.21'
L = 57.63'
R = 60.53'

EDJ10 CURVE NOTES

PI = 78+46.19
Y = 571,585.424
X = 801,373.734
∠ = 140°-37'-31"
Δ = 39°-22'-29"
D = 716°-11'-50"
T = 2.86'
L = 5.50'
R = 8.00'

EDJ11 CURVE NOTES

PI = 78+85.00
Y = 571,552.303
X = 801,353.061
∠ = 171°-59'-22"
Δ = 8°-00'-38
D = 99°-38'-41"
T = 4.03'
L = 8.04'
R = 57.50'

PROJECT NO: 1146-39-71	HWY: STH 15	COUNTY: OUTAGAMIE	ALIGNMENT CURVE NOTES (PRIMARY)	SHEET 60	E

2

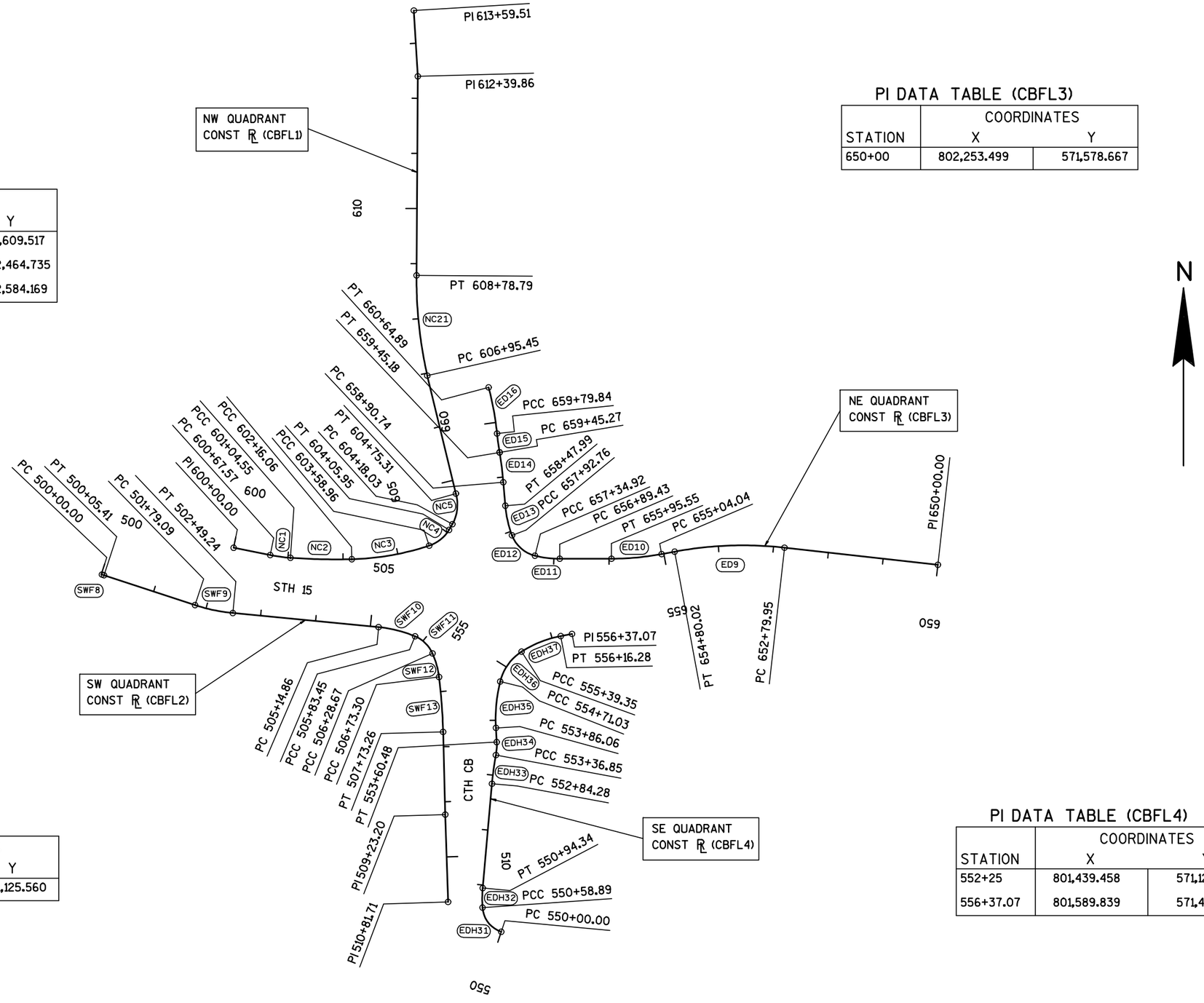

PI DATA TABLE (CBFL1)

STATION	COORDINATES X	Y
600+00	800,976.205	571,609.517
612+39.86	801,310.236	572,464.735
613+59.51	801,303.030	572,584.169

PI DATA TABLE (CBFL3)

STATION	COORDINATES X	Y
650+00	802,253.499	571,578.667

PI DATA TABLE (CBFL2)

STATION	COORDINATES X	Y
509+23.20	801,360.035	571,125.560

PI DATA TABLE (CBFL4)

STATION	COORDINATES X	Y
552+25	801,439.458	571,122.373
556+37.07	801,589.839	571,453.229

PROJECT NO: 1146-39-71	HWY: STH 15	COUNTY: OUTAGAMIE	ALIGNMENT DIAGRAM (QUADRANT CURB)	SHEET 61	E

NW QUADRANT FLANGE LINE (CBFL1)

NC1 CURVE NOTES

PI = 600+86.09
Y = 571,592.677
X = 801,060.629
∠ = 172°-49'-02"
Δ = 7°-10'-58"
D = 19°-25'-20"
T = 18.52'
L = 36.98'
R = 295.00'

NC2 CURVE NOTES

PI = 601+60.35
Y = 571,587.367
X = 801,134.753
∠ = 174°-24'-20"
Δ = 5°-35'-40"
D = 5°-01'-02"
T = 55.80'
L = 111.51'
R = 1142.00'

NC3 CURVE NOTES

PI = 602+88.03
Y = 571,590.703
X = 801,262.472
∠ = 163°-11'-18"
Δ = 16°-48'-42"
D = 11°-45'-54"
T = 71.97'
L = 142.90'
R = 487.00'

NC4 CURVE NOTES

PI = 603+83.47
Y = 571,621.008
X = 801,354.062
∠ = 139°-48'-57"
Δ = 40°-11'-04"
D = 85°-30'-58"
T = 24.51'
L = 46.99'
R = 67.00'

NC5 CURVE NOTES

PI = 604+48.19
Y = 571,678.803
X = 801,387.436
∠ = 135°-39'-05"
Δ = 44°-20'-55"
D = 77°-25'-36"
T = 30.16'
L = 57.28'
R = 74.00'

NC21 CURVE NOTES

PI = 607+87.52
Y = 572,011.608
X = 801,307.225
∠ = 193°-01'-00"
Δ = 13°-01'-00"
D = 7°-06'-00"
T = 92.07'
L = 183.34'
R = 807.00'

SW QUADRANT FLANGE LINE (CBFL2)

SWF8 CURVE NOTES

PI = 500+02.70
Y = 571,560.499
X = 800,738.538
∠ = 179°-51'-17"
Δ = 0°-08'-43"
D = 2°-41'-07"
T = 2.70'
L = 5.41'
R = 2133.68'

SWF9 CURVE NOTES

PI = 502+14.31
Y = 571,494.544
X = 800,939.601
∠ = 167°-21'-36"
Δ = 12°-38'-24"
D = 18°-01'-03"
T = 35.22'
L = 70.15'
R = 318.00'

SWF10 CURVE NOTES

PI = 505+49.42
Y = 571,462.276
X = 801,273.440
∠ = 197°-18'-45"
Δ = 17°-18'-45"
D = 25°-14'-26"
T = 34.56'
L = 68.59'
R = 227.00'

SWF11 CURVE NOTES

PI = 506+07.19
Y = 571,439.651
X = 801,327.175
∠ = 223°-10'-59"
Δ = 43°-10'-59"
D = 95°-29'-35"
T = 23.75'
L = 45.22'
R = 60.00'

SWF12 CURVE NOTES

PI = 506+51.15
Y = 571,397.416
X = 801,345.965
∠ = 197°-02'-49"
Δ = 17°-02'-49"
D = 38°-11'-50"
T = 22.48'
L = 44.63'
R = 150.00'

SWF13 CURVE NOTES

PI = 507+23.32
Y = 571,325.448
X = 801,354.720
∠ = 185°-24'-48"
Δ = 5°-24'-48"
D = 5°-24'-56"
T = 50.02'
L = 99.96'
R = 1058.00'

NE QUADRANT FLANGE LINE (CBFL3)

ED9 CURVE NOTES

PI = 653+80.72
Y = 571,620.919
X = 801,875.131
∠ = 163°-05'-33"
Δ = 16°-54'-28"
D = 8°-27'-03"
T = 100.77'
L = 200.07'
R = 678.00'

ED10 CURVE NOTES

PI = 655+49.92
Y = 571,589.712
X = 801,707.342
∠ = 190°-29'-10"
Δ = 10°-29'-10"
D = 11°-27'-33"
T = 45.88'
L = 91.51'
R = 500.00'

ED11 CURVE NOTES

PI = 657+12.29
Y = 571,589.571
X = 801,544.718
∠ = 194°-10'-00"
Δ = 14°-10'-00"
D = 31°-08'-20"
T = 22.86'
L = 45.50'
R = 184.00'

ED12 CURVE NOTES

PI = 657+66.31
Y = 571,602.803
X = 801,492.105
∠ = 235°-13'-47"
Δ = 55°-13'-47"
D = 95°-29'-35"
T = 31.39'
L = 57.84'
R = 60.00'

ED13 CURVE NOTES

PI = 658+20.55
Y = 571,658.178
X = 801,471.232
∠ = 195°-49'-20"
Δ = 15°-49'-20"
D = 28°-38'-52"
T = 27.79'
L = 55.23'
R = 200.00'

ED14 CURVE NOTES

PI = 659+17.97
Y = 571,755.610
X = 801,462.997
∠ = 175°-19'-51"
Δ = 4°-40'-09"
D = 8°-34'-38"
T = 27.23'
L = 54.44'
R = 668.00'

ED15 CURVE NOTES

PI = 659+62.56
Y = 571,799.614
X = 801,455.631
∠ = 183°-36'-06"
Δ = 3°-36'-06"
D = 10°-25'-03"
T = 17.29'
L = 34.57'
R = 550.00'

ED16 CURVE NOTES

PI = 660+22.45
Y = 571,859.199
X = 801,449.467
∠ = 171°-08'-23"
Δ = 8°-51'-37"
D = 10°-25'-03"
T = 42.61'
L = 85.05'
R = 550.00'

SE QUADRANT FLANGE LINE (CBFL4)

EDH31 CURVE NOTES

PI = 550+33.40
Y = 570,923.497
X = 801,429.898
∠ = 247°-29'-08"
Δ = 67°-29'-08"
D = 114°-35'-30"
T = 33.40'
L = 58.89'
R = 50.00'

EDH32 CURVE NOTES

PI = 550+76.65
Y = 570,974.532
X = 801,426.335
∠ = 189°-03'-58"
Δ = 9°-03'-58"
D = 25°-34'-43"
T = 17.76'
L = 35.45'
R = 224.00'

EDH33 CURVE NOTES

PI = 553+10.59
Y = 571,207.625
X = 801,447.025
∠ = 185°-27'-23"
Δ = 5°-27'-23"
D = 10°-22'-47"
T = 26.30'
L = 52.57'
R = 552.00'

EDH34 CURVE NOTES

PI = 553+48.73
Y = 571,245.160
X = 801,454.001
∠ = 166°-10'-55"
Δ = 13°-49'-05"
D = 58°-27'-54"
T = 11.88'
L = 23.64'
R = 98.00'

EDH35 CURVE NOTES

PI = 554+28.86
Y = 571,325.280
X = 801,449.397
∠ = 197°-04'-53"
Δ = 17°-04'-53"
D = 20°-06'-14"
T = 42.80'
L = 84.97'
R = 285.00'

EDH36 CURVE NOTES

PI = 555+06.93
Y = 571,401.712
X = 801,468.159
∠ = 223°-29'-39"
Δ = 43°-29'-39"
D = 63°-39'-43"
T = 35.90'
L = 68.32'
R = 90.00'

EDH37 CURVE NOTES

PI = 555+78.29
Y = 571,442.162
X = 801,531.133
∠ = 202°-02'-17"
Δ = 22°-02'-17"
D = 28°-38'-52"
T = 38.95'
L = 76.93'
R = 200.00'

2

CENTRAL ISLAND
CONST ℄ (CI1)

CI5 CI4 CI3 CI2 CI1

PC 80+14.71
08
PT 82+88.40
PCC 82+50.39
PC 82+33.82
PT 82+09.71
PCC 81+02.09
PCC 81+75.55

PI 31+09.90
PT 31+11.25
EDD2
PC 30+79.54
PI 29+80.81
30
CTH CB
CTH CB NB SPLT. ISLAND
CONST ℄ (NBCBSI1)
PI 28+30.33
PT 27+31.38
CTH CB SB SPLT. ISLAND
CONST ℄ (SBCBSI1)
PT 26+96.75
NEW10
PC 25+39.18
IC1
25
PC 24+16.45
PT 23+67.49
NEW9
PT 22+48.45
NEW25
PT 21+86.45
PC 21+97.99
PC 21+54.57
PC 21+61.51
NEW24
175
PC 174+70.18
PT 175+58.05

STH 15 WB BYPASS ISLAND
CONST ℄ (BPFL6)

PC 400+00.00
PC 450+00.00
450
400
PCC 400+27.53
PT 400+71.07
PT 450+69.29
451
401
PI 451+01.55
IC2
NI15
NI16
STH 15 WB BYPASS ISLAND
CONST ℄ (BPFL5)
PI 401+07.61

N

(SEE PRIMARY ALIGNMENT)
STH 15 WESTBOUND
CONST ℄ (PRL15WB1)

PC 163+80.67
PC 164+81.96
165
PCC 168+37.34
PCC 169+32.38
170
PT 171+24.91
PCC 171+55.32
PT 172+70.01

(SEE PRIMARY ALIGNMENT)
STH 15 EASTBOUND
CONST ℄ (PRL15EB1)

STH 15

SPLT. ISLAND EB 15 EXIT
CONST ℄ (15EBSI1)

SPLT. ISLAND WB 15 ENTRANCE
CONST ℄ (15WBSI1)

180
WB16
EH1
PRL9
08
PI 19+55.53
PT 175+43.57
PC 174+85.02
PC 176+92.89
PI 177+69.95
PI 178+30.21
PT 179+76.53
PI 181+41.29

PC 172+22.83
PT 172+85.05
PT 19+17.38
PC 17+96.61
PT 19+52.48
PC 18+91.92
PT 17+78.14
PC 16+67.67
PT 16+46.59
PC 16+06.78
PT 15+15.64
PI 15+00.00 ℄
PC 14+42.03

(SEE PRIMARY ALIGNMENT)
CTH CB SOUTHBOUND
CONST ℄ (RLSBCB1)

(SEE PRIMARY ALIGNMENT)
CTH CB NORTHBOUND
CONST ℄ (RLNBCB1)

STH 15 EB BYPASS ISLAND
CONST ℄ (BPFL3)

200
250
201
251
EDH14
EDH15
SWF1
PI 200+00.00
PI 250+00.00
PC 250+58.24
PC 200+75.19
PCC 201+31.28
PT 201+47.06
PT 251+38.05

STH 15 EB BYPASS ISLAND
CONST ℄ (BPFL4)

CTH CB NB BYPASS ISLAND
CONST ℄ (BPFL1)

302
301
351
NI10
NI11
NI9
NI14
NI13
NI8
NI12
PCC 300+90.50
PCC 300+63.27
PCC 351+13.81
PCC 301+79.81
PT 351+74.16
PI 351+83.49
PT 302+01.51
PCC 350+21.28
PI 300+00.00
300
350
PC 300+07.84
PC 350+00.00

CTH CB NB BYPASS ISLAND
CONST ℄ (BPFL2)

PROJECT NO: 1146-39-71	HWY: STH 15	COUNTY: OUTAGAMIE	ALIGNMENT DIAGRAM (SPLITTER & BYPASS ISLANDS)	SHEET 63	E

2

EB STH 15 MEDIAN CURB (15EBSI1)

PRL9 CURVE NOTES

PI	= 175+14.38
Y	= 571,497.581
X	= 801,526.340
∠	= 190°-45'-05"
△	= 10°-45'-05"
D	= 18°-21'-51"
T	= 29.36'
L	= 58.55'
R	= 312.00'

WB STH 15 MEDIAN CURB (15WBSI1)

EH1 CURVE NOTES

PI	= 175+16.61
Y	= 571,507.882
X	= 801,541.952
∠	= 134°-13'-54"
△	= 45°-46'-06"
D	= 52°-05'-14"
T	= 46.43'
L	= 87.87'
R	= 110.00'

WB16 CURVE NOTES

PI	= 178+37.01
Y	= 571,600.114
X	= 801,853.993
∠	= 205°-00'-08"
△	= 25°-00'-08"
D	= 8°-48'-53"
T	= 144.12'
L	= 283.64'
R	= 650.00'

NB CTH CB SPLITTER ISLAND CURB (NBCBSI1)

NEW24 CURVE NOTES

PI	= 21+70.57
Y	= 571,642.699
X	= 801,449.577
∠	= 192°-10'-37"
△	= 12°-10'-37"
D	= 38°-11'-50"
T	= 16.00'
L	= 31.88'
R	= 150.00'

NEW9 CURVE NOTES

PI	= 22+83.22
Y	= 571,755.470
X	= 801,449.920
∠	= 165°-03'-32"
△	= 14°-56'-28"
D	= 8°-48'-53"
T	= 85.23'
L	= 169.50'
R	= 650.00'

NEW10 CURVE NOTES

PI	= 26+35.85
Y	= 572,097.384
X	= 801,359.796
∠	= 195°-08'-50"
△	= 15°-08'-50"
D	= 7°-52'-52"
T	= 96.66'
L	= 192.20'
R	= 727.00'

EDD2 CURVE NOTES

PI	= 30+95.49
Y	= 572,557.740
X	= 801,350.855
∠	= 165°-20'-48"
△	= 14°-39'-12"
D	= 46°-12'-23"
T	= 15.94'
L	= 31.71'
R	= 124.00'

SB CTH CB SPLITTER ISLAND CURB (SBCBSI1)

NEW 25 CURVE NOTES

PI	= 22+07.39
Y	= 571,676.752
X	= 801,426.709
∠	= 134°-43'-04"
△	= 45°-16'-56"
D	= 52°-05'-14"
T	= 45.88'
L	= 86.94'
R	= 110.00'

IC1 CURVE NOTES

PI	= 25+58.13
Y	= 572,018.079
X	= 801,327.115
∠	= 200°-36'-59"
△	= 20°-36'-59"
D	= 7°-21'-18"
T	= 141.68'
L	= 280.30'
R	= 779.00'

2

BYPASS FROM CTH CB TO STH 15 LEFT OUTSIDE (BPFL1)

NI8 CURVE NOTES

PI	= 300+36.56
Y	= 571,400.237
X	= 801,427.343
∠	= 216°-55'-59"
△	= 36°-55'-59"
D	= 66°-37'-23"
T	= 28.72'
L	= 55.44'
R	= 86.00'

NI9 CURVE NOTES

PI	= 300+77.24
Y	= 571,436.646
X	= 801,501.981
∠	= 211°-12'-15"
△	= 31°-12'-15"
D	= 114°-35'-30"
T	= 13.96'
L	= 27.23'
R	= 50.00'

NI10 CURVE NOTES

PI	= 301+35.49
Y	= 571,463.718
X	= 801,501.981
∠	= 197°-03'-23"
△	= 17°-03'-23"
D	= 19°-05'-55"
T	= 44.99'
L	= 89.31'
R	= 300.00'

NI11 CURVE NOTES

PI	= 301+90.66
Y	= 571,473.686
X	= 801,556.923
∠	= 182°-04'-21"
△	= 2°-04'-21"
D	= 9°-32'-58"
T	= 10.85'
L	= 21.70'
R	= 600.00'

BYPASS FROM CTH CB TO STH 15 LEFT INSIDE (BPFL2)

NI12 CURVE NOTES

PI	= 350+10.64
Y	= 571,374.242
X	= 801,440.203
∠	= 184°-03'-52"
△	= 4°-03'-52"
D	= 19°-05'-55"
T	= 10.65'
L	= 21.28'
R	= 300.00'

NI13 CURVE NOTES

PI	= 350+72.10
Y	= 571,434.419
X	= 801,452.733
∠	= 238°-54'-23"
△	= 58°-54'-23"
D	= 63°-39'-43"
T	= 50.82'
L	= 92.53'
R	= 90.00'

NI14 CURVE NOTES

PI	= 351+44.09
Y	= 571,461.266
X	= 801,529.259
∠	= 191°-31'-33"
△	= 11°-31'-33"
D	= 19°-05'-55"
T	= 30.28'
L	= 60.35'
R	= 300.00'

BYPASS FROM STH 15 TO CTH CB LEFT OUTSIDE (BPFL3)

EDH14 CURVE NOTES

PI	= 201+04.27
Y	= 571,508.151
X	= 801,276.461
∠	= 217°-21'-55"
△	= 37°-21'-55"
D	= 66°-37'-23"
T	= 29.08'
L	= 56.09'
R	= 86.00'

EDH15 CURVE NOTES

PI	= 201+39.17
Y	= 571,487.086
X	= 801,306.846
∠	= 183°-36'-59"
△	= 3°-36'-59"
D	= 22°-55'-06"
T	= 7.89'
L	= 15.78'
R	= 250.00'

BYPASS FROM STH 15 TO CTH CB LEFT INSIDE (BPFL4)

SWF1 CURVE NOTES

PI	= 250+98.48
Y	= 571,488.185
X	= 801,270.612
∠	= 198°-13'-04"
△	= 18°-13'-04"
D	= 22°-49'-37"
T	= 40.24'
L	= 79.81'
R	= 251.00'

BYPASS FROM STH 15 TO CTH CB NORTH INSIDE (BPFL5)

NI15 CURVE NOTES

PI	= 400+13.78
Y	= 571,571.795
X	= 801,514.224
∠	= 173°-41'-23"
△	= 6°-18'-37"
D	= 22°-55'-06"
T	= 13.78'
L	= 27.53'
R	= 250.00'

NI16 CURVE NOTES

PI	= 400+50.08
Y	= 571,555.790
X	= 801,546.830
∠	= 143°-19'-14"
△	= 36°-40'-46"
D	= 84°-15'-31"
T	= 22.54'
L	= 43.53'
R	= 68.00'

BYPASS FROM STH 15 TO CTH CB NORTH OUTSIDE (BPFL6)

IC2 CURVE NOTES

PI	= 450+35.00
Y	= 571,572.702
X	= 801,537.953
∠	= 160°-08'-57"
△	= 19°-51'-03"
D	= 28°-38'-52"
T	= 35.00'
L	= 69.29'
R	= 200.00'

CENTRAL ISLAND CURB FACE (CI1)

CI1 CURVE NOTES

PI	= 80+84.11
Y	= 571,489.161
X	= 801,330.743
∠	= 63°-33'-32"
△	= 116°-26'-28"
D	= 133°-14'-46"
T	= 69.41'
L	= 87.39'
R	= 43.00'

CI2 CURVE NOTES

PI	= 81+47.18
Y	= 571,477.688
X	= 801,444.655
∠	= 96°-08'-16"
△	= 83°-51'-44"
D	= 114°-09'-32"
T	= 45.08'
L	= 73.46'
R	= 50.19'

CI3 CURVE NOTES

PI	= 81+94.84
Y	= 571,540.591
X	= 801,458.289
∠	= 113°-39'-46"
△	= 66°-20'-14"
D	= 194°-13'-23"
T	= 19.28'
L	= 34.16'
R	= 29.50'

CI4 CURVE NOTES

PI	= 82+42.20
Y	= 571,571.003
X	= 801,416.392
∠	= 159°-22'-29"
△	= 20°-37'-31"
D	= 124°-28'-38"
T	= 8.38'
L	= 16.57'
R	= 46.03'

CI5 CURVE NOTES

PI	= 82+72.55
Y	= 571,579.312
X	= 801,387.012
∠	= 106°-10'-45"
△	= 73°-49'-15"
D	= 194°-13'-23"
T	= 22.16'
L	= 38.01'
R	= 29.50'

PI DATA TABLE (15EBSI1)

STATION	COORDINATES X	Y
177+69.95	801,781.355	571,516.808
178+30.21	801,841.173	571,524.157

PI DATA TABLE (15WBSI1)

STATION	COORDINATES X	Y
181+41.29	802,159.442	571,554.270

PI DATA TABLE (NBCBSI1)

STATION	COORDINATES X	Y
28+30.33	801,361.096	572,292.986
29+80.81	801,350.093	572,443.063

PI DATA TABLE (SBCBSI1)

STATION	COORDINATES X	Y
31+09.90	801,340.953	572,572.464

PI DATA TABLE (BPFL2)

STATION	COORDINATES X	Y
351+83.49	801,568.498	571,466.690

PI DATA TABLE (BPFL3)

STATION	COORDINATES X	Y
200+00	801,172.297	571,503.360
201+47.06	801,313.036	571,482.189

PI DATA TABLE (BPFL4)

STATION	COORDINATES X	Y
250+00	801,172.264	571,493.372

PI DATA TABLE (BPFL5)

STATION	COORDINATES X	Y
401+07.61	801,604.921	571,566.595

PI DATA TABLE (BPFL6)

STATION	COORDINATES X	Y
451+01.55	801,605.179	571,574.556

PROJECT NO: 1146-39-71	HWY: STH 15	COUNTY: OUTAGAMIE	ALIGNMENT CURVE NOTES (SPLITTER & BYPASS ISLANDS)	SHEET 64	E

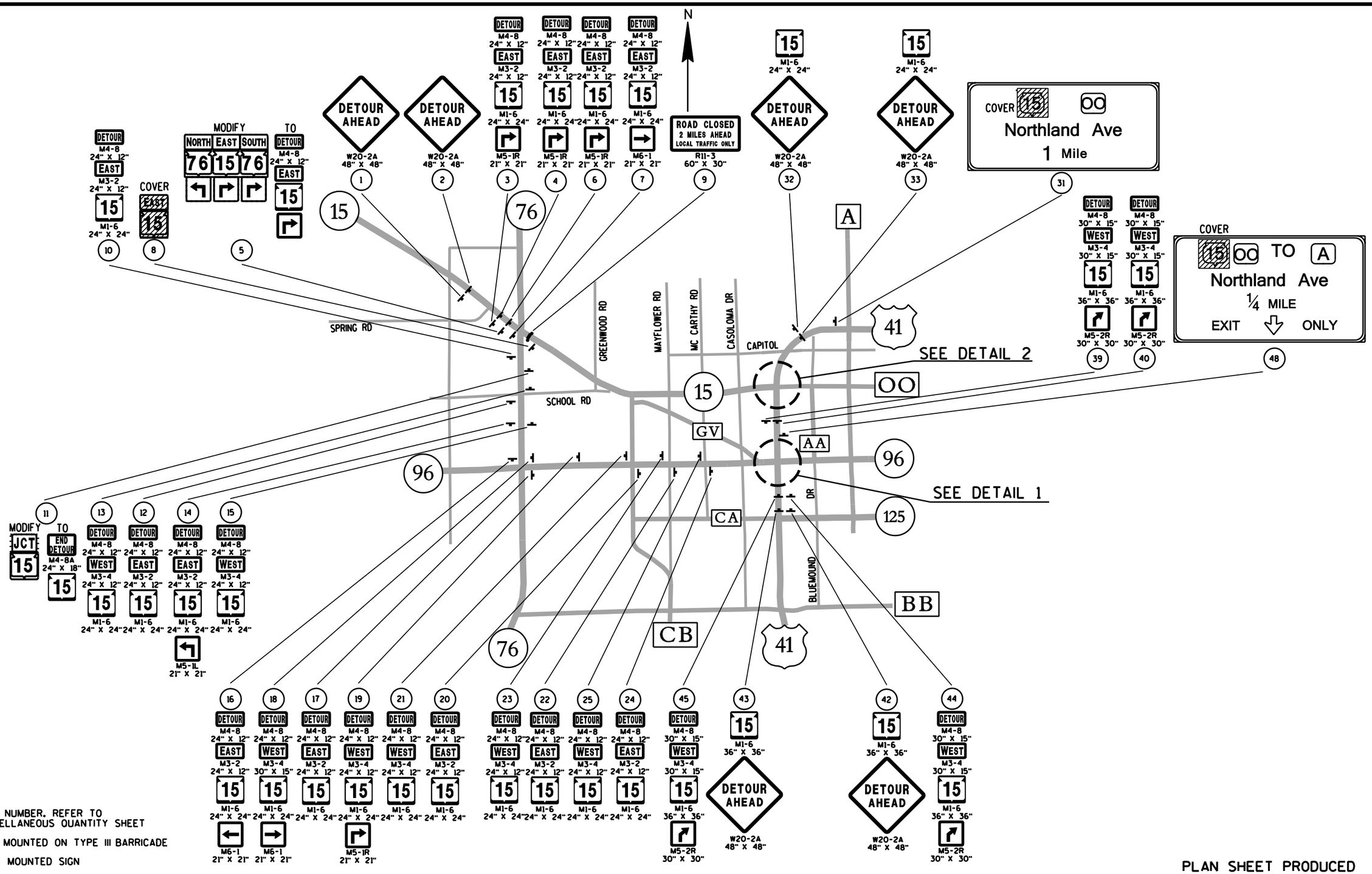

LEGEND

(X) SIGN NUMBER. REFER TO MISCELLANEOUS QUANTITY SHEET

SIGN MOUNTED ON TYPE III BARRICADE

POST MOUNTED SIGN

PLAN SHEET PRODUCED BY WisDOT-NE REGION

PROJECT NO: 1146-39-71	HWY: STH 15	COUNTY: OUTAGAMIE	DETOUR SIGNING DETAIL	SHEET	E

FILE NAME : $$....designfile....$$ PLOT DATE : $$...plottingdate...$$ PLOT BY : $$...plotuser...$$ PLOT NAME : PLOT SCALE : $$.....plotscale.....$$ WISDOT/CADDS SHEET 42

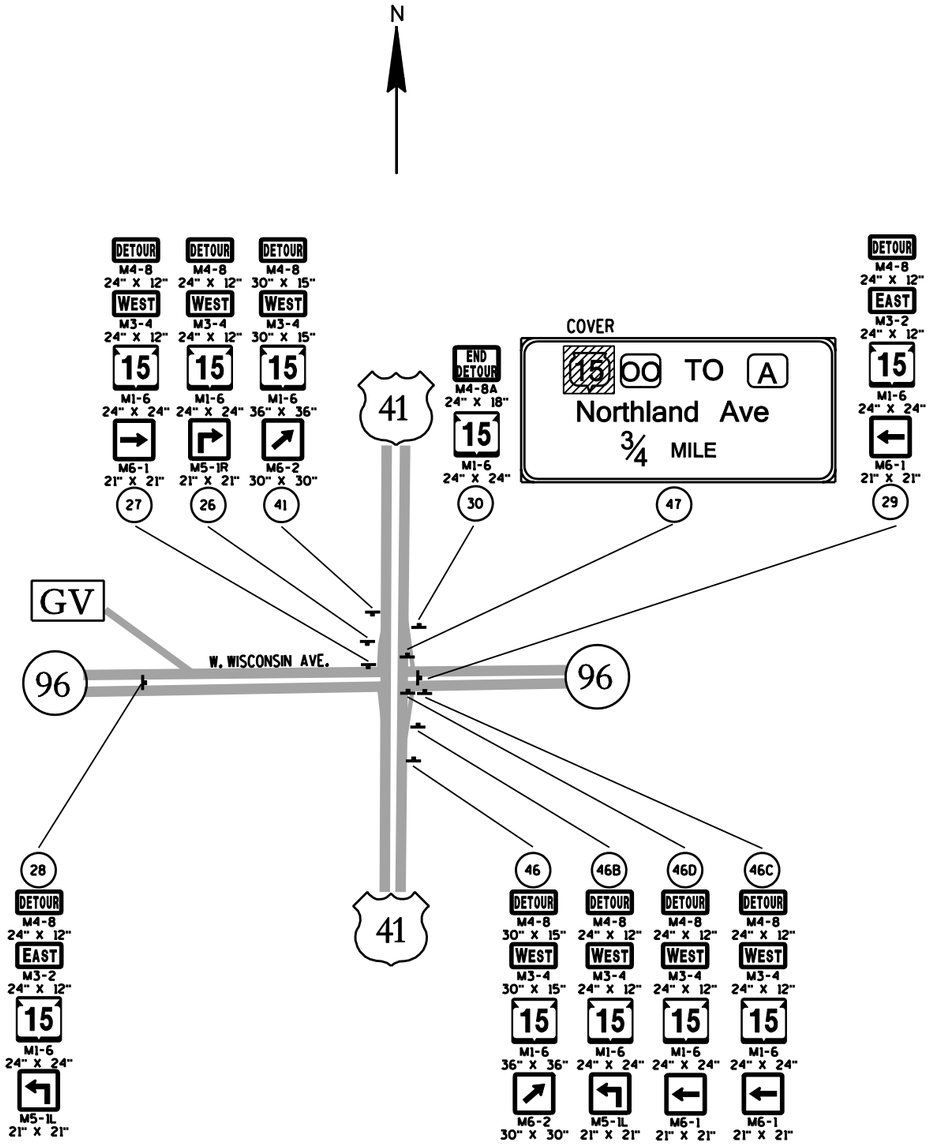

LEGEND

(X) SIGN NUMBER. REFER TO MISCELLANEOUS QUANTITY SHEET

SIGN MOUNTED ON TYPE III BARRICADE

POST MOUNTED SIGN

DETAIL 1

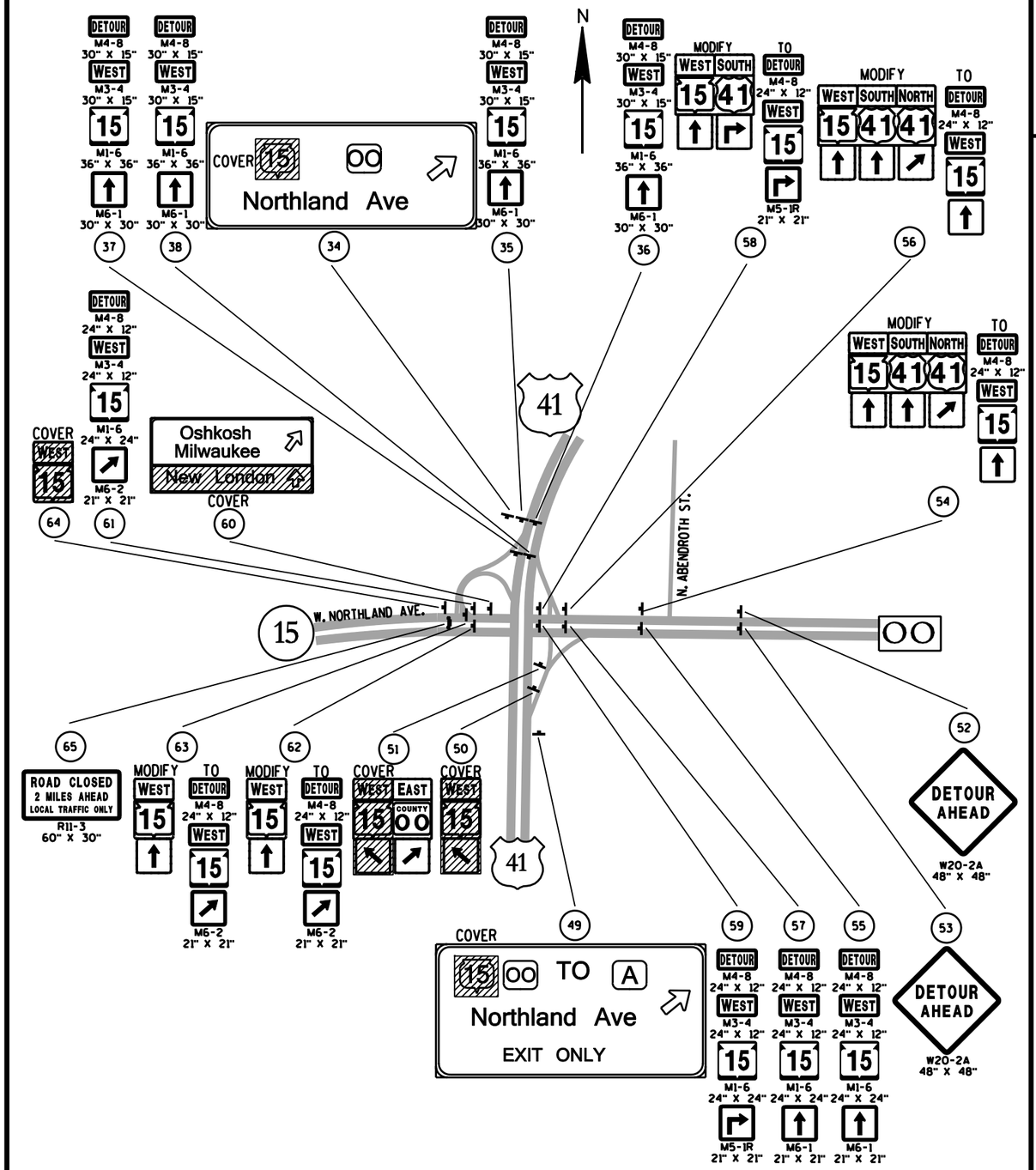

DETAIL 2

PLAN SHEET PRODUCED BY WisDOT-NE REGION

PROJECT NO: 1146-39-71	HWY: STH 15	COUNTY: OUTAGAMIE	DETOUR SIGNING DETAIL	SHEET	E

FILE NAME : $$....designfile....$$ PLOT DATE : $$...plottingdate...$$ PLOT BY : $$...plotuser...$$ PLOT NAME : PLOT SCALE : $$.....plotscale.....$$ WISDOT/CADDS SHEET 42

DATE 10OCT11 — E S T I M A T E O F Q U A N T I T I E S

LINE NUMBER	ITEM	ITEM DESCRIPTION	UNIT	TOTAL	1146-39-71 QUANTITY
0010	201.0105	CLEARING	STA	70.000	70.000
0020	201.0205	GRUBBING	STA	70.000	70.000
0030	204.0100	REMOVING PAVEMENT	SY	16,900.000	16,900.000
0040	204.0110	REMOVING ASPHALTIC SURFACE	SY	142.000	142.000
0050	204.0150	REMOVING CURB & GUTTER	LF	1,335.000	1,335.000
0060	204.0195	REMOVING CONCRETE BASES	EACH	13.000	13.000
0070	204.0220	REMOVING INLETS	EACH	11.000	11.000
0080	204.0245	REMOVING STORM SEWER (SIZE) 01. 12-INCH	LF	205.000	205.000
0090	204.0245	REMOVING STORM SEWER (SIZE) 02. 18-INCH	LF	365.000	365.000
0100	205.0100	EXCAVATION COMMON	CY	26,426.000	26,426.000
0110	213.0100	FINISHING ROADWAY (PROJECT) 01. 1146-39-71	EACH	1.000	1.000
0120	305.0110	BASE AGGREGATE DENSE 3/4-INCH	TON	2,130.000	2,130.000
0130	305.0120	BASE AGGREGATE DENSE 1 1/4-INCH	TON	14,835.000	14,835.000
0140	311.0110	BREAKER RUN	TON	19,020.000	19,020.000
0150	405.0100	COLORING CONCRETE RED	CY	332.000	332.000
0160	415.0100	CONCRETE PAVEMENT 10-INCH	SY	11,033.000	11,033.000
0170	416.0512	CONCRETE ROUNDABOUT TRUCK APRON 12-INCH	SY	460.000	460.000
0180	455.0105	ASPHALTIC MATERIAL PG58-28	TON	282.500	282.500
0190	455.0605	TACK COAT	GAL	664.000	664.000
0200	460.1100	HMA PAVEMENT TYPE E-0.3	TON	431.000	431.000
0210	460.1103	HMA PAVEMENT TYPE E-3	TON	4,690.000	4,690.000
0220	460.2000	INCENTIVE DENSITY HMA PAVEMENT	DOL	5,082.000	5,082.000
0230	460.4100.S	REHEATING HMA LONGITUDINAL JOINTS	STA	56.000	56.000
0240	460.4200.S	HMA PAVEMENT INTERSECTION	TON	3,063.000	3,063.000
0250	465.0105	ASPHALTIC SURFACE	TON	250.000	250.000
0260	465.0315	ASPHALTIC FLUMES	SY	121.000	121.000
0270	521.0121	CULVERT PIPE CORRUGATED STEEL 21-INCH	LF	88.000	88.000
0280	521.1021	APRON ENDWALLS FOR CULVERT PIPE STEEL 21-INCH	EACH	2.000	2.000
0290	522.1012	APRON ENDWALLS FOR CULVERT PIPE REINFORCED CONCRETE 12-INCH	EACH	8.000	8.000
0300	522.1015	APRON ENDWALLS FOR CULVERT PIPE REINFORCED CONCRETE 15-INCH	EACH	1.000	1.000
0310	522.1018	APRON ENDWALLS FOR CULVERT PIPE REINFORCED CONCRETE 18-INCH	EACH	3.000	3.000
0320	601.0105	CONCRETE CURB TYPE A	LF	300.000	300.000
0330	601.0409	CONCRETE CURB & GUTTER 30-INCH TYPE A	LF	1,055.000	1,055.000
0340	601.0411	CONCRETE CURB & GUTTER 30-INCH TYPE D	LF	5,660.000	5,660.000
0350	601.0413	CONCRETE CURB & GUTTER 6-INCH SLOPED 30-INCH TYPE G	LF	30.000	30.000
0360	601.0551	CONCRETE CURB AND GUTTER 4-INCH SLOPED 36-INCH TYPE A	LF	1,131.000	1,131.000
0370	601.0553	CONCRETE CURB AND GUTTER 4-INCH SLOPED 36-INCH TYPE D	LF	910.000	910.000
0380	601.0555	CONCRETE CURB AND GUTTER 6-INCH SLOPED 36-INCH TYPE A	LF	220.000	220.000
0390	601.0557	CONCRETE CURB AND GUTTER 6-INCH SLOPED 36-INCH TYPE D	LF	840.000	840.000
0400	601.0574	CONCRETE CURB & GUTTER 4-INCH SLOPED 30-INCH TYPE G	LF	60.000	60.000
0410	601.0580	CONCRETE CURB & GUTTER 4-INCH SLOPED 36-INCH TYPE R	LF	400.000	400.000
0420	601.0600	CONCRETE CURB PEDESTRIAN	LF	160.000	160.000
0430	602.0405	CONCRETE SIDEWALK 4-INCH	SF	15,575.000	15,575.000

3

DATE 10OCT11 E S T I M A T E O F Q U A N T I T I E S

LINE NUMBER	ITEM	ITEM DESCRIPTION	UNIT	TOTAL	1146-39-71 QUANTITY
0440	602.0515	CURB RAMP DETECTABLE WARNING FIELD NATURAL PATINA	SF	224.000	224.000
0450	606.0200	RIPRAP MEDIUM	CY	61.500	61.500
0460	608.0412	STORM SEWER PIPE REINFORCED CONCRETE CLASS IV 12-INCH	LF	789.000	789.000
0470	608.0415	STORM SEWER PIPE REINFORCED CONCRETE CLASS IV 15-INCH	LF	187.000	187.000
0480	608.0418	STORM SEWER PIPE REINFORCED CONCRETE CLASS IV 18-INCH	LF	237.000	237.000
0490	611.0201	MANHOLES TYPE 1	EACH	2.000	2.000
0500	611.0301	INLETS TYPE 1	EACH	1.000	1.000
0510	611.0303	INLETS TYPE 3	EACH	30.000	30.000
0520	611.0305	INLETS TYPE 8	EACH	1.000	1.000
0530	611.0606	INLET COVERS TYPE B	EACH	3.000	3.000
0540	611.0624	INLET COVERS TYPE H	EACH	14.000	14.000
0550	611.0627	INLET COVERS TYPE HM	EACH	8.000	8.000
0560	611.0639	INLET COVERS TYPE H-S	EACH	7.000	7.000
0570	611.0642	INLET COVERS TYPE MS	EACH	1.000	1.000
0580	611.0652	INLET COVERS TYPE T	EACH	2.000	2.000
0590	612.0406	PIPE UNDERDRAIN WRAPPED 6-INCH	LF	140.000	140.000
0600	618.0100	MAINTENANCE AND REPAIR OF HAUL ROADS (PROJECT) 01. 1146-39-71	EACH	1.000	1.000
0610	619.1000	MOBILIZATION	EACH	1.000	1.000
0620	620.0300	CONCRETE MEDIAN SLOPED NOSE	SF	398.000	398.000
0630	623.0200	DUST CONTROL SURFACE TREATMENT	SY	37,490.000	37,490.000
0640	624.0100	WATER	MGAL	24.000	24.000
0650	625.0105	TOPSOIL	CY	972.000	972.000
0660	625.0500	SALVAGED TOPSOIL	SY	35,474.000	35,474.000
0670	627.0200	MULCHING	SY	6,759.000	6,759.000
0680	628.1504	SILT FENCE	LF	3,795.000	3,795.000
0690	628.1520	SILT FENCE MAINTENANCE	LF	3,795.000	3,795.000
0700	628.1905	MOBILIZATIONS EROSION CONTROL	EACH	2.000	2.000
0710	628.1910	MOBILIZATIONS EMERGENCY EROSION CONTROL	EACH	2.000	2.000
0720	628.2002	EROSION MAT CLASS I TYPE A	SY	13,126.000	13,126.000
0730	628.2008	EROSION MAT URBAN CLASS I TYPE B	SY	14,385.000	14,385.000
0740	628.7005	INLET PROTECTION TYPE A	EACH	4.000	4.000
0750	628.7010	INLET PROTECTION TYPE B	EACH	11.000	11.000
0760	628.7015	INLET PROTECTION TYPE C	EACH	20.000	20.000
0770	628.7504	TEMPORARY DITCH CHECKS	LF	294.000	294.000
0780	628.7555	CULVERT PIPE CHECKS	EACH	6.000	6.000
0790	628.7570	ROCK BAGS	EACH	26.000	26.000
0800	629.0210	FERTILIZER TYPE B	CWT	22.350	22.350
0810	630.0110	SEEDING MIXTURE NO. 10	LB	325.400	325.400
0820	630.0130	SEEDING MIXTURE NO. 30	LB	204.700	204.700
0830	630.0200	SEEDING TEMPORARY	LB	50.000	50.000
0840	632.0101	TREES (SPECIES, ROOT, SIZE) 01. DWARF SARGENT TINA CRABAPPLE	EACH	3.000	3.000
0850	632.0101	TREES (SPECIES, ROOT, SIZE) 02. IOWA JUNIPER	EACH	3.000	3.000
0860	632.0201	SHRUBS (SPECIES, ROOT, SIZE) 01. MISS KIM LILAC	EACH	9.000	9.000
0870	632.0201	SHRUBS (SPECIES, ROOT, SIZE) 02. ROSA NEARLY WILD	EACH	3.000	3.000
0880	632.9101	LANDSCAPE PLANTING SURVEILLANCE AND CARE CYCLES	EACH	9.000	9.000

3

DATE 10OCT11 E S T I M A T E O F Q U A N T I T I E S

LINE NUMBER	ITEM	ITEM DESCRIPTION	UNIT	TOTAL	1146-39-71 QUANTITY
0890	633.5200	MARKERS CULVERT END	EACH	12.000	12.000
0900	634.0612	POSTS WOOD 4X6-INCH X 12-FT	EACH	24.000	24.000
0910	634.0614	POSTS WOOD 4X6-INCH X 14-FT	EACH	22.000	22.000
0920	634.0616	POSTS WOOD 4X6-INCH X 16-FT	EACH	12.000	12.000
0930	637.0202	SIGNS REFLECTIVE TYPE II	SF	551.380	551.380
0940	638.2102	MOVING SIGNS TYPE II	EACH	2.000	2.000
0950	638.2602	REMOVING SIGNS TYPE II	EACH	41.000	41.000
0960	638.3000	REMOVING SMALL SIGN SUPPORTS	EACH	21.000	21.000
0970	638.4000	MOVING SMALL SIGN SUPPORTS	EACH	2.000	2.000
0980	641.8100	OVERHEAD SIGN SUPPORT (STRUCTURE) 01. (S-44-0055)	LS	1.000	1.000
0990	641.8100	OVERHEAD SIGN SUPPORT (STRUCTURE) 02. (S-44-0056)	LS	1.000	1.000
1000	641.8100	OVERHEAD SIGN SUPPORT (STRUCTURE) 03. (S-44-0057)	LS	1.000	1.000
1010	641.8100	OVERHEAD SIGN SUPPORT (STRUCTURE) 04. (S-44-0058)	LS	1.000	1.000
1020	642.5001	FIELD OFFICE TYPE B	EACH	1.000	1.000
1030	643.0100	TRAFFIC CONTROL (PROJECT) 01. 1146-39-71	EACH	1.000	1.000
1040	643.0300	TRAFFIC CONTROL DRUMS	DAY	1,738.000	1,738.000
1050	643.0420	TRAFFIC CONTROL BARRICADES TYPE III	DAY	1,760.000	1,760.000
1060	643.0705	TRAFFIC CONTROL WARNING LIGHTS TYPE A	DAY	1,896.000	1,896.000
1070	643.0900	TRAFFIC CONTROL SIGNS	DAY	208.000	208.000
1080	643.0905.S	TRAFFIC CONTROL COVERING SIGNS	EACH	80.000	80.000
1090	643.1050	TRAFFIC CONTROL SIGNS PCMS	DAY	14.000	14.000
1100	643.2000	TRAFFIC CONTROL DETOUR (PROJECT) 01. 1146-39-71	EACH	1.000	1.000
1110	643.3000	TRAFFIC CONTROL DETOUR SIGNS	DAY	18,900.000	18,900.000
1120	645.0120	GEOTEXTILE FABRIC TYPE HR	SY	123.200	123.200
1130	646.0106	PAVEMENT MARKING EPOXY 4-INCH	LF	13,466.000	13,466.000
1140	646.0126	PAVEMENT MARKING EPOXY 8-INCH	LF	111.000	111.000
1150	646.0841.S	PAVEMENT MARKING GROOVED WET REFLECTIVE CONTRAST TAPE 4-INCH	LF	863.000	863.000
1160	646.0843.S	PAVEMENT MARKING GROOVED WET REFLECTIVE CONTRAST TAPE 8-INCH	LF	425.000	425.000
1170	646.0881.S	PAVEMENT MARKING GROOVED WET REFLECTIVE TAPE 4-INCH	LF	38.000	38.000
1180	646.0883.S	PAVEMENT MARKING GROOVED WET REFLECTIVE TAPE 8-INCH	LF	3,613.000	3,613.000
1190	647.0606	PAVEMENT MARKING ISLAND NOSE EPOXY	EACH	1.000	1.000
1200	649.0400	TEMPORARY PAVEMENT MARKING REMOVABLE TAPE 4-INCH	LF	692.000	692.000
1210	650.4000	CONSTRUCTION STAKING STORM SEWER	EACH	48.000	48.000
1220	650.4500	CONSTRUCTION STAKING SUBGRADE	LF	7,424.000	7,424.000
1230	650.5000	CONSTRUCTION STAKING BASE	LF	4,248.000	4,248.000
1240	650.5500	CONSTRUCTION STAKING CURB GUTTER AND CURB & GUTTER	LF	7,022.000	7,022.000
1250	650.6000	CONSTRUCTION STAKING PIPE CULVERTS	EACH	1.000	1.000
1260	650.7000	CONSTRUCTION STAKING CONCRETE PAVEMENT	LF	3,176.000	3,176.000
1270	650.8500	CONSTRUCTION STAKING ELECTRICAL INSTALLATIONS (PROJECT) 01. 1146-39-71	LS	1.000	1.000
1280	650.9910	CONSTRUCTION STAKING SUPPLEMENTAL CONTROL (PROJECT) 01. 1146-39-71	LS	1.000	1.000
1290	650.9920	CONSTRUCTION STAKING SLOPE STAKES	LF	7,424.000	7,424.000
1300	652.0125	CONDUIT RIGID METALLIC 2-INCH	LF	10.000	10.000

3

DATE 10OCT11 E S T I M A T E O F Q U A N T I T I E S

LINE NUMBER	ITEM	ITEM DESCRIPTION	UNIT	TOTAL	1146-39-71 QUANTITY
1310	652.0225	CONDUIT RIGID NONMETALLIC SCHEDULE 40 2-INCH	LF	1,403.000	1,403.000
1320	652.0235	CONDUIT RIGID NONMETALLIC SCHEDULE 40 3-INCH	LF	960.000	960.000
1330	653.0105	PULL BOXES STEEL 12X24-INCH	EACH	1.000	1.000
1340	653.0140	PULL BOXES STEEL 24X42-INCH	EACH	11.000	11.000
1350	653.0905	REMOVING PULL BOXES	EACH	20.000	20.000
1360	654.0105	CONCRETE BASES TYPE 5	EACH	17.000	17.000
1370	654.0215	CONCRETE CONTROL CABINET BASES TYPE 9	EACH	1.000	1.000
1380	655.0320	CABLE TYPE UF 2-10 AWG GROUNDED	LF	163.000	163.000
1390	655.0610	ELECTRICAL WIRE LIGHTING 12 AWG	LF	3,000.000	3,000.000
1400	655.0615	ELECTRICAL WIRE LIGHTING 10 AWG	LF	12,250.000	12,250.000
1410	656.0200	ELECTRICAL SERVICE METER BREAKER PEDESTAL (LOCATION) 01. STH 15 & CTH CB	LS	1.000	1.000
1420	657.0255	TRANSFORMER BASES BREAKAWAY 11 1/2-INCH BOLT CIRCLE	EACH	17.000	17.000
1430	657.0322	POLES TYPE 5-ALUMINUM	EACH	17.000	17.000
1440	657.0710	LUMINAIRE ARMS TRUSS TYPE 4 1/2-INCH CLAMP 12-FT	EACH	20.000	20.000
1450	659.0115	LUMINAIRES UTILITY HPS 150 WATTS	EACH	2.000	2.000
1460	659.0125	LUMINAIRES UTILITY HPS 250 WATTS	EACH	18.000	18.000
1470	690.0250	SAWING CONCRETE	LF	202.000	202.000
1480	715.0415	INCENTIVE STRENGTH CONCRETE PAVEMENT	DOL	2,759.000	2,759.000
1490	ASP.1T0A	ON-THE-JOB TRAINING APPRENTICE AT $5. 00/HR	HRS	2,000.000	2,000.000
1500	ASP.1T0G	ON-THE-JOB TRAINING GRADUATE AT $5.00/HR	HRS	1,320.000	1,320.000
1510	SPV.0060	SPECIAL 01. INLETS TYPE 2 SPECIAL	EACH	2.000	2.000
1520	SPV.0060	SPECIAL 02. GRASS INDIAN	EACH	3.000	3.000
1530	SPV.0060	SPECIAL 03. FIREWORKS GOLDEN ROD	EACH	30.000	30.000
1540	SPV.0060	SPECIAL 04. YELLOW DAY LILY	EACH	15.000	15.000
1550	SPV.0060	SPECIAL 05. LITTLE BLUESTEM	EACH	9.000	9.000
1560	SPV.0060	SPECIAL 06. GREYHANDED CONEFLOWER	EACH	30.000	30.000
1570	SPV.0060	SPECIAL 07. PALE PURPLE CONEFLOWER	EACH	15.000	15.000
1580	SPV.0060	SPECIAL 08. COREOPSIS GOLDEN SHOWERS	EACH	30.000	30.000
1590	SPV.0060	SPECIAL 09. PAVEMENT MARKING GROOVED PREFORMED THERMOPLASTIC ARROWS TYPE 1	EACH	10.000	10.000
1600	SPV.0060	SPECIAL 10. PAVEMENT MARKING GROOVED PREFORMED THERMOPLASTIC ARROWS TYPE 2	EACH	12.000	12.000
1610	SPV.0060	SPECIAL 11. PAVEMENT MARKING GROOVED PREFORMED THERMOPLASTIC ARROWS TYPE 2R	EACH	3.000	3.000
1620	SPV.0060	SPECIAL 12. PAVEMENT MARKING GROOVED PREFORMED THERMOPLASTIC ARROWS TYPE 3	EACH	10.000	10.000
1630	SPV.0060	SPECIAL 13. PAVEMENT MARKING GROOVED PREFORMED THERMOPLASTIC ARROWS TYPE 3R	EACH	5.000	5.000
1640	SPV.0060	SPECIAL 14. PAVEMENT MARKING GROOVED PREFORMED THERMOPLASTIC WORDS	EACH	24.000	24.000
1650	SPV.0060	SPECIAL 15. LANDSCAPE RECEPTACLE	EACH	1.000	1.000
1660	SPV.0060	SPECIAL 16. METER BREAKER PEDESTAL SPECIAL	EACH	1.000	1.000
1670	SPV.0090	SPECIAL 01. PAVEMENT MARKING GROOVED PREFORMED THERMOPLASTIC YIELD LINE	LF	66.000	66.000
1680	SPV.0090	SPECIAL 02. PAVEMENT MARKING GROOVED PREFORMED THERMOPLASTIC 8-INCH	LF	1,079.000	1,079.000
1690	SPV.0090	SPECIAL 03. PAVEMENT MARKING GROOVED PREFORMED THERMOPLASTIC 12-INCH	LF	139.000	139.000
1700	SPV.0090	SPECIAL 04. PAVEMENT MARKING GROOVED PREFORMED THERMOPLASTIC CROSSWALK	LF	302.000	302.000

3

DATE 10OCT11 E S T I M A T E O F Q U A N T I T I E S

LINE NUMBER	ITEM	ITEM DESCRIPTION	UNIT	TOTAL	1146-39-71 QUANTITY
1710	SPV.0090	SPECIAL 05. ALUMINUM EDGING	LF	207.000	207.000
1720	SPV.0105	SPECIAL 01. CONCRETE PAVEMENT JOINT LAYOUT	LS	1.000	1.000
1730	SPV.0105	SPECIAL 02. REMOVE TRAFFIC SIGNAL	LS	1.000	1.000
1740	SPV.0105	SPECIAL 03. REMOVE TRAFFIC CONTROL DEVICES	LS	1.000	1.000
1750	SPV.0180	SPECIAL 01. SHREDDED HARDWOOD BULK MULCH	SY	310.000	310.000
1760	SPV.0180	SPECIAL 02. DECOMPOSED (ROTTEN) GRANITE STONE MULCH	SY	346.000	346.000

CLEARING AND GRUBBING

STATION	TO	STATION	LOCATION	201.0105 CLEARING STA	201.0205 GRUBBING STA
CATEGORY 0010					
166+00	-	187+75	STH 15 RT	22	22
166+00	-	187+75	STH 15 LT	22	22
			CATEGORY TOTAL	44	44
CATEGORY 0040					
21+75	-	33+75	CTH CB RT	13	13
21+75	-	33+75	CTH CB LT	13	13
			CATEGORY TOTAL	26	26
			PROJECT TOTAL	70	70

REMOVING INLETS

STATION	LOCATION	204.0220 EACH
CATEGORY 0010		
182+95 STH 15 WB	25'LT	1
173+00 STH 15 EB	37'LT	1
173+00 STH 15 EB	12'LT	1
171+60 STH 15 EB	13'LT	1
171+60 STH 15 EB	33'LT	1
171+60 STH 15 EB	52'LT	1
170+33 STH 15 EB	5'LT	1
17+65 CTH CB NB	44'LT	1
17+52 CTH CB NB	17'LT	1
17+45 CTH CB NB	1.5'LT	1
17+35 CTH CB NB	30.5'RT	1
	PROJECT TOTAL	11

REMOVING PAVEMENT

STATION	TO	STATION	LOCATION	204.0100 SY
CATEGORY 0010				
166+00	-	187+75	STH 15 WB LANES	7000
166+00	-	187+75	STH 15 EB LANES	9900
			PROJECT TOTAL	16900

REMOVING ASPHALTIC SURFACE

STATION	TO	STATION	LOCATION	204.0110 SY
CATEGORY 0010				
163+83	-	166+00	STH 15 WB, LT SHOULDER	142
			PROJECT TOTAL	142

REMOVING CURB & GUTTER

STATION	TO	STATION	LOCATION	204.0150 LF
CATEGORY 0010				
			NE QUAD STH 15 / CTH CB	45
			NW QUAD STH 15 / CTH CB	65
			CTH CB NORTH LEG MEDIAN	100
16+50	-	18+52	CTH CB SOUTH LEG MEDIAN	620
16+50	-	18+62	CTH CB SOUTH LEG SB RT	180
16+50	-	18+52	CTH CB SOUTH LEG NB RT	325
			PROJECT TOTAL	1335

REMOVING STORM SEWER

STATION	TO	STATION	LOCATION	204.0245 .01 12-INCH LF	204.0245 .02 18-INCH LF
CATEGORY 0010					
171+44	-	171+55	STH 15 EB LT&RT	130	
170+30	-	170+35	STH 15 EB LT&RT	75	
173+05	-	173+15	STH 15 WB LT&RT		75
182+90	-	182+95	STH 15 EB LT&RT		100
17+25	-	17+63	CTH CB RT & LT		190
			PROJECT TOTAL	205	365

3

EARTHWORK SUMMARY

From/To Station	Location	205.0100 Common Excavation (1)	Salvaged/Unusable Pavement Material (3)	Available Material (4)	Unexpanded Fill	Expanded Fill (5)	Mass Ordinate +/- (6)	Waste (7)
		Cut (2)				Factor 1.15		
CATEGORY 0010								
165+00.00 - 173+00.00	STH 15 West Leg	1,877	1,311	566	2,877	3,309	-2,743	0
174+85.50 - 188+00.00	STH 15 East Leg	15,345	2,764	12,581	2,476	2,847	9,734	3,736
16+25.00 - 19+50.00	CTH CB South Leg	1,435	424	1,011	950	1,092	-82	0
75+00.00 - 78+75.00	Circulatory Roadway	970	741	229	2,959	3,403	-3,174	0
	CATEGORY TOTAL	19,627	5,240	14,387	9,262	10,651	3,736	3,736
CATEGORY 0040								
21+75.00 - 33+75.00	CTH CB North Leg	6,650	0	6,650	3,192	3,671	2,979	2,893
0+00.00 - 4+00.00	Neubert Road	149	0	149	205	236	-87	0
	CATEGORY TOTAL	6,799	0	6,799	3,397	3,906	2,893	2,893
	TOTAL COMMON EXCAVATION	26,426	5,240	21,186	12,658	14,557	6,629	6,629

1) Common Excavation is the sum of the Cut and EBS Excavation columns. Item number 205.0100
2) Salvaged/Unusable Pavement Material is included in Cut.
3) Salvaged/Unusable Pavement Material (Quantity includes existing concrete and asphaltic material only)
4) Available Material = Cut - Salvaged/Unusuable Pavement Material
5) Expanded Fill. Factor = 1.15
   Expanded Fill = (Unexpanded Fill - Rock* Rock Factor) * Fill Factor
6) The Mass Ordinate + or - Qty calculated for the Division. Plus quantity indicates an excess of material within the Division.
   Minus indicates a shortage of material within the Division.
7) The waste quantity accounts for the fill material needed as shown in the mass ordinate column.

FILE NAME : Q\Misc Quantities\1146-39-00\misc_q_border.ppt PLOT DATE : _____ PLOT BY : Northeast Region PLOT NAME : _____ PLOT SCALE : 1:1

3

3/4" BASE AGGREGATE DENSE SUMMARY

STATION	TO	STATION	LOCATION	305.0110 BASE AGGREGATE DENSE 3/4 INCH TON	*624.0100 WATER MGAL	REMARKS
CATEGORY 0010						
166+50	-	169+50	STH 15 - WEST LEG WB OUTSIDE SHOULDER	190	1	SHOULDER
175+75	-	187+75	STH 15 - EAST LEG EB OUTSIDE SHOULDER	650	1	SHOULDER
178+50	-	187+75	STH 15 - EAST LEG EB INSIDE SHOULDER	480	1	SHOULDER
182+50	-	187+75	STH 15 - EAST LEG WB OUTSIDE SHOULDER	270	1	SHOULDER
181+50	-	187+75	STH 15 - EAST LEG WB INSIDE SHOULDER	310	1	SHOULDER
167+18	-	188+00	PROJECT	100	1	UNDISTRIBUTED
			CATEGORY TOTAL	2000	6	
CATEGORY 0040						
24+25	-	30+75	CTH CB - NORTH LEG NB OUSIDE SHOULDER	130	1	SHOULDER
			CATEGORY TOTAL	130	1	
			PROJECT TOTAL	2130	7	

* ADDITIONAL QUANTITY SHOWN ELSEWHERE

1-1/4" BASE AGGREGATE DENSE SUMMARY

STATION	TO	STATION	LOCATION	305.0120 BASE AGGREGATE DENSE 1-1/4 INCH TON	311.0110 BREAKER RUN TON	*624.0100 WATER MGAL	REMARKS
CATEGORY 0010							
170+00	-	177+50	STH 15 / CTH CB CIRCULATORY ROADWAY	3000	5000	3	
177+50	-	187+75	STH 15 - EAST LEG EB	2600	2500	3	
175+50	-	187+75	STH 15 - EAST LEG WB	1950	1700	2	
166+00	-	170+00	STH 15 - WEST LEG EB	590	390	1	
166+00	-	172+50	STH 15 - WEST LEG WB	1050	910	1	
16+50	-	19+50	CTH CB - SOUTH LEG NB	670	1200	1	
16+50	-	19+50	CTH CB - SOUTH LEG SB	520	670	1	
167+18	-	188+00	PROJECT		100		UNDISTRIBUTED
			CATEGORY TOTAL	10380	12470	12	
CATEGORY 0020							
16+50	-	19+50	CTH CB SOUT LEG BIKE PATH	430	0	0	
			CATEGORY TOTAL	430	0	0	
CATEGORY 0040							
21+75	-	31+25	CTH CB - NORTH LEG SB	1450	2650	2	
21+75	-	31+25	CTH CB - NORTH LEG SB	1600	2450	2	
31+25	-	33+25	CTH CB - NORTH LEG	840	1450	1	
21+25	-	32+50	CTH CB NORTH LEG BIKE PATH	135		0	
			CATEGORY TOTAL	4025	6550	5	
			PROJECT TOTAL	14835	19020	17	

* ADDITIONAL QUANTITY SHOWN ELSEWHERE

CONCRETE PAVEMENT 10-INCH

STATION	TO	STATION	LOCATION	415.0100 SY	715.0415 INCENTIVE STRENGTH CONCRETE PAVEMENT DOL	REMARKS
CATEGORY 0010						
166+00	-	169+60	STH 15 WEST LEG EB	793	198	TRAVEL LANES
166+00	-	172+46	STH 15 WEST LEG WB	2150	538	TRAVEL LANES
177+50	-	187+75	STH 15 EAST LEG EB	4920	1230	TRAVEL LANES
175+59	-	187+75	STH 15 EAST LEG WB	3170	793	TRAVEL LANES
			PROJECT TOTAL	11033	2759	

3

HMA SUMMARY

STATION	TO	STATION	LOCATION	455.0105 ASPHALTIC MATERIAL PG58-28 TON	* ASPHALTIC MATERIAL TON	455.0605 TACK COAT GAL	460.1100 HMA PAVEMENT TYPE E-0.3 TON	460.1103 HMA PAVEMENT TYPE E-3 TON	460.4200.S HMA PAVEMENT INTERSECTION TON	460.2000 INCENTIVE DENSITY HMA PAVEMENT DOL	465.0105 ASPHALTIC SURFACE TON	REMARKS
CATEGORY 0010												
169+60	-	177+50	STH 15 / CTH CB CIRCULATORY ROADWAY	102				1849		1153		LOWER LAYER
169+60	-	177+50	STH 15 / CTH CB CIRCULATORY ROADWAY		101	201			1847	1153		MIDDLE LAYER
169+60	-	177+50	STH 15 / CTH CB CIRCULATORY ROADWAY		53	201			963	602		UPPER LAYER
16+50	-	18+80	CTH CB - SOUTH LEG NB	14.1				257		136		LOWER LAYER
16+50	-	18+80	CTH CB - SOUTH LEG NB		9.7	37			176	113		UPPER LAYER
16+50	-	18+80	CTH CB - SOUTH LEG SB	6.1				112		77		LOWER LAYER
16+50	-	18+80	CTH CB - SOUTH LEG SB		4.2	16			77	46		UPPER LAYER
163+83	-	166+00	STH 15 - WEST LEG WB OUTSIDE SHOULDER	1.6			30			20		SHOULDER
166+50	-	169+50	STH 15 - WEST LEG WB OUTSIDE SHOULDER	3.5			63			40		SHOULDER
175+75	-	187+75	STH 15 - EAST LEG EB OUTSIDE SHOULDER	8.9			162			104		SHOULDER
178+50	-	187+75	STH 15 - EAST LEG EB INSIDE SHOULDER	3.4			63			40		SHOULDER
182+50	-	187+75	STH 15 - EAST LEG WB OUTSIDE SHOULDER	3.9			71			45		SHOULDER
181+50	-	187+75	STH 15 - EAST LEG WB INSIDE SHOULDER	2.3			42			27		SHOULDER
			CATEGORY TOTAL	145.8	167.9	455	431	2218	3063	3556	0	
CATEGORY 0020												
16+50	-	19+50	CTH CB SOUTH LEG BIKE PATH		3.3						60	BIKE PATH
			CATEGORY TOTAL	0	3.3	0	0	0	0	0	60	
CATEGORY 0040												
23+25	-	31+25	CTH CB - NORTH LEG NB	29.0				520		333		LOWER LAYER
23+25	-	31+25	CTH CB - NORTH LEG NB	16.0		69		293		188		UPPER LAYER
23+25	-	31+25	CTH CB - NORTH LEG SB	29.0				520		333		LOWER LAYER
23+25	-	31+25	CTH CB - NORTH LEG SB	16.0		69		293		188		UPPER LAYER
31+25	-	33+75	CTH CB - NORTH LEG	27.0				490		275		LOWER LAYER
31+25	-	33+75	CTH CB - NORTH LEG	15.0		64		270		154		UPPER LAYER
24+25	-	30+75	CTH CB - NORTH LEG NB OUTSIDE SHOULDER	3.0				55		35		SHOULDER LOWER LIFT
24+25	-	30+75	CTH CB - NORTH LEG NB OUTSIDE SHOULDER	1.7		7		31		20		SHOULDER UPPER LIFT
21+25	-	32+50	CTH CB NORTH LEG BIKE PATH		11						190	BIKE PATH
			CATEGORY TOTAL	136.7	11.0	209	0	2472	0	1526	190	
			PROJECT TOTAL	282.5	182.2	664	431	4690	3063	5082	250	

* FOR INFORMATION ONLY

FILE NAME : Q\Misc Quantities\1146-39-00\misc_q_border.ppt PLOT DATE : _____ PLOT BY : Northeast Region PLOT NAME : _____ PLOT SCALE : 1:1

3

REHEATING HMA PAVEMENT LONGITUDINAL JOINTS

STATION	TO	STATION	LOCATION	460.4100.S STA	REMARKS
CATEGORY 0010					
170+67	-	172+85	STH 15 EB RT	3	UPPER LAYER
170+10	-	173+10	STH 15 EB RT TURN LANE	3	UPPER LAYER
174+75	-	177+50	STH 15 WB LT	8	UPPER LAYER
174+85	-	175+60	STH 15 EB RT	1	UPPER LAYER
16+50	-	19+50	CTH CB SB LT	3	UPPER LAYER
16+50	-	19+50	CTH CB NB RT	3	UPPER LAYER
17+65	-	175+50	RT TURN LANCE CTH CB/STH 15	3	UPPER LAYER
			CATEGORY TOTAL	24	
CATEGORY 0040					
21+65	-	24+50	CTH CB SB LT TURN LANE	3	UPPER LAYER
21+65	-	33+75	CTH CB SB LT	13	UPPER LAYER
21+55	-	33+75	CTH CB NB RT	13	UPPER LAYER
28+50	-	31+00	LT TURN LANE	3	UPPER LAYER
			CATEGORY TOTAL	32	
			PROJECT TOTAL	56	

ASPHALTIC FLUMES

STATION	LOCATION	465.0315 SY
CATEGORY 0010		
169+27	STH 15 WB LT	11
175+80	STH 15 EB RT	11
178+35	STH 15 EB LT	11
181+45	STH 15 WB RT	11
182+37	STH 15 WB LT	11
	CATEGORY TOTAL	55
CATEGORY 0040		
24+30	CTH CB NB RT	11
32+32	CTH CB NB RT	11
32+53	CTH CB SB LT	11
0+37	NEUBERT RD LT	11
0+48	NEUBERT RD LT	11
2+00	NEUBERT RD RT	11
	CATEGORY TOTAL	66
	PROJECT TOTAL	121

CULVERT PIPE SUMMARY

STATION	LOCATION	THICKNESS STEEL INCHES	THICKNESS ALUMINUM INCHES	521.0121 CULVERT PIPE CORRUGATED STEEL 21-INCH LF	521.1021 APRON ENDWALLS FOR CULVERT PIPE STEEL 21-INCH EA
CATEGORY 0040					
1+97	NEUBERT RD, RHF	0.064	0.060	88	2
	PROJECT TOTAL			88	2

APRON ENDWALLS FOR CULVERT PIPE REINFORCED CONCRETE 12-INCH

STATION	LOCATION	522.1012 EACH
CATEGORY 0010		
167+50 EB	STH 15	1
171+82.3 EB	STH 15	1
175+54.7 EB	STH 15	1
176+02 WB	STH 15	1
178+75 WB	STH 15	1
77+52.4 CIRC	CIRCULATORY RDWY	1
	CATEGORY TOTAL	6
CATEGORY 0040		
27+50 NB	CTH CB	1
31+06.6 NB	CTH CB	1
	CATEGORY TOTAL	2
	PROJECT TOTAL	8

APRON ENDWALLS FOR CULVERT PIPE REINFORCED CONCRETE 15- INCH

STATION	LOCATION	522.1015 EACH
CATEGORY 0010		
18+05.5 NB	CTH CB	1
	PROJECT TOTAL	1

APRON ENDWALLS FOR CULVERT PIPE REINFORCED CONCRETE 18 -INCH

STATION	LOCATION	522.1018 EACH
CATEGORY 0010		
188+25 WB	STH 15	1
17+26 NB	CTH CB	1
17+80 SB	CTH CB	1
	PROJECT TOTAL	3

3

CONCRETE CURB AND GUTTER SUMMARY

STATION	TO	STATION	LOCATION	601.0105 CONCRETE CURB TYPE A LF	601.0409 CONCRETE CURB AND GUTTER 30-INCH TYPE A LF	601.0411 CONCRETE CURB AND GUTTER 30-INCH TYPE D LF	601.0413 CONCRETE CURB AND GUTTER 6-INCH SLOPED 30-INCH TYPE G LF	601.0551 CONCRETE CURB AND GUTTER 4-INCH SLOPED 36-INCH TYPE A LF	601.0553 CONCRETE CURB AND GUTTER 4-INCH SLOPED 36-INCH TYPE D LF	601.0555 CONCRETE CURB AND GUTTER 6-INCH SLOPED 36-INCH TYPE A LF	601.0557 CONCRETE CURB AND GUTTER 6-INCH SLOPED 36-INCH TYPE D LF	601.0574 CONCRETE CURB AND GUTTER 4-INCH SLOPED 30-INCH TYPE G LF	601.0580 CONCRETE CURB AND GUTTER 4-INCH SLOPED 36-INCH TYPE R LF	601.0600 CONCRETE CURB AND GUTTER CURB PEDESTRIAN LF
CATEGORY 0010														
167+18	-	167+49	STH 15 WB LT									30		
167+18	-	167+49	STH 15 EB LT									30		
167+49	-	169+60	STH 15 EB LT					211						
167+49	-	172+46	STH 15 WB LT					500						
169+60	-	172+85	STH 15 EB LT			325								
172+46	-	172+70	STH 15 WB LT			50								
174+70	-	177+50	STH 15 WB LT			300								
174+85	-	175+59	STH 15 EB LT			95								
175+59	-	178+30	STH 15 EB LT		270									
177+50	-	179+75	STH 15 WB LT		230									
179+75	-	181+41	STH 15 WB LT					170						
200+00	-	201+47	STH 15 EB RTTL LT			160								
250+00	-	251+38	STH 15 EB RTTL RT			150								
300+00	-	302+00	CTH CB NB RTTL LT			210								
350+00	-	351+83	CTH CB NB RTTL RT			200								
400+00	-	401+08	STH 15 WB RTTL RT			120								
450+00	-	451+00	STH 15 WB RTTL LT			110								
500+00	-	503+00	SW QUADRANT STH 15 / CTH CB				30							
500+31	-	502+50	SW QUADRANT STH 15 / CTH CB							220				
502+50	-	509+19	SW QUADRANT STH 15 / CTH CB			670								
552+32	-	556+22	SE QUADRANT STH 15 / CTH CB			390								
556+22	-	556+37	SE QUADRANT STH 15/CTH CB		15									
600+00	-	604+25	NW QUADRANT STH 15 / CTH CB		300	125								
650+00	-	652+54	NE QUADRANT STH 15/CTH CB					250						
652+54	-	658+25	NE QUADRANT STH 15/CTH CB		240	335								
16+50	-	19+50	CTH CB NB LT			330								
16+50	-	19+55	CTH CB SB LT			340								
75+00	-	78+89	STH 15 / CTH CB CENTER ISLAND	300									400	
			CATEGORY TOTAL	300	1055	3910	30	1131	0	220	0	60	400	0

CONTINUED

3

CONCRETE CURB AND GUTTER SUMMARY CONTINUED

STATION	TO	STATION	LOCATION	601.0105 CONCRETE CURB TYPE A LF	601.0409 CONCRETE CURB AND GUTTER 30-INCH TYPE A LF	601.0411 CONCRETE CURB AND GUTTER 30-INCH TYPE D LF	601.0413 CONCRETE CURB AND GUTTER 6-INCH SLOPED 30-INCH TYPE G LF	601.0551 CONCRETE CURB AND GUTTER 4-INCH SLOPED 36-INCH TYPE A LF	601.0553 CONCRETE CURB AND GUTTER 4-INCH SLOPED 36-INCH TYPE D LF	601.0555 CONCRETE CURB AND GUTTER 6-INCH SLOPED 36-INCH TYPE A LF	601.0557 CONCRETE CURB AND GUTTER 6-INCH SLOPED 36-INCH TYPE D LF	601.0574 CONCRETE CURB AND GUTTER 4-INCH SLOPED 30-INCH TYPE G LF	601.0580 CONCRETE CURB AND GUTTER 4-INCH SLOPED 36-INCH TYPE R LF	601.0600 CONCRETE CURB AND GUTTER CURB PEDESTRIAN LF
CATEGORY 0020														
172+40	-	172+50	STH 15 EB RT SPLITTER											60
172+40	-	172+50	STH 15 MEDIAN											30
			CATEGORY TOTAL	0	0	0	0	0	0	0	0	0	0	90
CATEGORY 0040														
604+25	-	608+36	NW QUADRANT STH 15 / CTH CB			415								
608+36	-	614+21	NW QUADRANT STH 15 / CTH CB								590			
658+25	-	660+90	NE QUADRANT STH 15/CTH CB			265								
21+54	-	24+25	CTH CB SB LT			300								
21+61	-	26+00	CTH CB NB LT			470								
22+50	-	22+60	CTH CB MEDIAN											70
24+25	-	31+09	CTH CB SB LT						680					
26+00	-	28+25	CTH CB NB LT						230					
28+25	-	31+11	CTH CB SB LT			300								
			SE QUAD CTH CB / NEUBERT RD INTER.								95			
			NE QUAD CTH CB / NEUBERT RD INTER.								60			
			NW QUAD CTH CB / NEUBERT RD INTER.								95			
			CATEGORY TOTAL	0	0	1750	0	0	910	0	840	0	0	70
			PROJECT TOTAL	300	1055	5660	30	1131	910	220	840	60	400	160

CONCRETE SIDEWALK 4-INCH

LOCATION	602.0405 SF	* 405.0100 COLORING CONCRETE RED CY
CATEGORY 0010		
STH 15 EB RTTL LT	1450	18
STH 15 EB LT	2200	27
STH 15 EB LT	2700	33
STH 15 WB RTTL LT	680	8
CTH CB NB LT	2700	33
CTH CB NB RTTL LT	1350	17
CATEGORY TOTAL	11080	136
CATEGORY 0020		
STH 15 EB RT	45	
STH 15 WB - 172+70 LT	50	
W. LEG BYPASS ISLAND	147	
W. LEG MEDIAN ISLAND	303	
CATEGORY TOTAL	545	0
CATEGORY 0040		
N. LEG LT 21+75	50	
N. LEG RT 21+75	50	
N. LEG MEDIAN 21+75	350	
N. LEG RT & LT 31+15	100	
N. LEG LT 32+00	50	
21+55 - 23+00 MEDIAN	3350	42
CATEGORY TOTAL	3950	42
PROJECT TOTAL	15575	178

* ADDITIONAL QUANTITIES SHOWN ELSEWHERE

CURB RAMP DETECTABLE WARNING FIELD NATURAL PATINA

STATION	LOCATION	602.0515 SF
CATEGORY 0020		
172+70	STH 15 WB RT	16
172+70	STH 15 WB LT	16
172+70	STH 15 EB RT	16
172+70	STH 15 EB LT	16
172+70	STH 15 EB RTL RT	16
172+70	STH 15 EB RTL LT	16
	CATEGORY TOTAL	96
CATEGORY 0040		
21+80	CTH CB SB LT	16
21+75	CTH CB NB LT	16
21+75	CTH CB NB RT	16
21+80	CTH CB SB RT	16
31+15	CTH CB SB LT	16
31+15	CTH CB NB RT	16
31+55	CTH CB NB LT	16
32+00	CTH CB SB LT	16
	CATEGORY TOTAL	128
	PROJECT TOTAL	224

RIPRAP SCHEDULE

STATION	LOCATION	606.0200 RIPRAP MEDIUM CY	645.0120 GEOTEXTILE FABRIC TYPE HR SY
CATEGORY 0010			
167+50	STH 15 EB RT	3.0	6.0
171+82	STH 15 EB RT	3.0	6.0
175+55	STH 15 EB RT	3.0	6.0
176+02	STH 15 WB LT	3.0	6.0
178+75	STH 15 WB RT	3.0	6.0
188+23	STH 15 WB LT	3.9	7.8
17+26	CTH CB NB RT	3.9	7.8
18+06	CTH CB NB RT	3.3	6.7
77+52	CIRCULATORY RDWY RT	3.0	6.0
169+27	STH 15 WB LT	2.0	4.0
181+45	STH 15 WB RT	2.0	4.0
182+37	STH 15 WB LT	2.0	4.0
	UNDISTRIBUTED	8.0	16.0
	CATEGORY TOTAL	43.1	86.3
CATEGORY 0040			
27+50	CTH CB NB RT	3.0	6.0
31+07	CTH CB NB RT	3.0	6.0
32+19	CTH CB NB RT	4.4	8.9
32+32	CTH CB NB RT	2.0	4.0
32+53	CTH CB SB LT	2.0	4.0
0+37	NEUBERT RD LT	2.0	4.0
0+48	NEUBERT RD RT	2.0	4.0
	CATEGORY TOTAL	18.4	36.9
	PROJECT TOTAL	61.5	123.2

3

STORM SEWER PIPE REINFORCED CONCRETE CLASS IV 12-INCH

FROM STRUCTURE	TO STRUCTURE	INLET ELEVATION	OUTLET ELEVATION	608.0412 STORM SEWER PIPE RC CLASS IV 12-INCH LF	* JOINT TIES EACH	SLOPE %
CATEGORY 0010						
1.1	1.2	878.00	877.93	13.5		0.52%
1.2	1.3	877.93	877.86	13.5		0.52%
1.3	1.4	877.86	877.72	27		0.52%
1.4	1.5	877.72	877.56	29	6	0.55%
2.1	2.2	878.14	877.87	54		0.50%
2.2	2.3	877.87	877.80	14		0.50%
2.3	2.4	877.80	877.67	26		0.50%
2.4	2.5	877.67	877.41	45	6	0.58%
3.1	3.2	876.60	876.57	5		0.60%
3.2	3.3	876.57	876.37	40.5	6	0.49%
4.1	4.2	876.67	876.63	5		0.80%
4.2	4.3	876.63	876.50	17		0.76%
4.3	4.4	876.50	876.34	16	6	1.00%
5.1	5.2	873.16	873.04	24	6	0.50%
8.1	8.2	876.30	876.20	10		1.00%
			CATEGORY TOTAL	339.5	30	
CATEGORY 0040						
9.1	9.2	880.72	880.64	15		0.53%
9.2	9.3	880.64	880.45	37		0.51%
9.3	9.4	880.45	880.34	30		0.37%
9.4	9.5	880.34	880.22	25		0.48%
9.5	9.6	880.22	879.94	52		0.54%
10.1	10.3	880.50	880.26	48		0.50%
10.2	10.3	880.52	880.26	53		0.49%
10.3	10.4	880.26	880.20	7		0.86%
10.4	10.5	880.20	879.95	51	6	0.49%
11.1	11.2	879.15	878.83	64		0.50%
11.2	11.3	878.83	878.81	2.5		0.80%
11.3	11.4	878.81	878.53	65	6	0.43%
			CATEGORY TOTAL	449.5	12	
			PROJECT TOTAL	789	42	

* INCIDENTAL; FOR INFORMATION ONLY

STORM SEWER PIPE REINFORCED CONCRETE CLASS IV 15-INCH

FROM STRUCTURE	TO STRUCTURE	INLET ELEVATION	OUTLET ELEVATION	608.0415 STORM SEWER PIPE RC CLASS IV 15-INCH LF	* JOINT TIES EACH	SLOPE %
CATEGORY 0010						
8.2	8.3	876.20	875.71	96		0.51%
8.3	8.4	875.71	875.67	7		0.57%
8.4	8.5	875.67	875.24	84	6	0.51%
			PROJECT TOTAL	187	6	

* INCIDENTAL; FOR INFORMATION ONLY

STORM SEWER PIPE REINFORCED CONCRETE CLASS IV 18-INCH

FROM STRUCTURE	TO STRUCTURE	INLET ELEVATION	OUTLET ELEVATION	608.0418 STORM SEWER PIPE RC CLASS IV 18-INCH LF	* JOINT TIES EACH	SLOPE %
CATEGORY 0010						
6.1	6.2	864.58	863.84	94	6	0.79%
7.1	7.2	873.53	873.35	35	6	0.51%
7.5	7.3	873.35	873.19	28		0.57%
7.3	7.4	873.19	873.09	16.5		0.61%
7.4	7.5	873.09	872.97	18		0.67%
7.5	7.6	872.97	872.78	31		0.61%
7.6	7.7	872.78	872.70	14	6	0.57%
			PROJECT TOTAL	237	18	

* INCIDENTAL; FOR INFORMATION ONLY

STORM SEWER SUMMARY

STRUCTURE ID	STATION	LOCATION	OFFSET	SPV.0060.01 INLETS TYPE 2 SPECIAL EACH	611.0201 MANHOLES TYPE 1 EACH	611.0301 INLETS TYPE 1 EACH	611.0303 INLETS TYPE 3 EACH	611.0305 INLETS TYPE 8 EACH	611.0606 INLET COVERS TYPE B EACH	611.0624 INLET COVERS TYPE H EACH	611.0627 INLET COVERS TYPE HM EACH	611.0639 INLET COVERS TYPE H-S EACH	611.0642 INLET COVERS TYPE MS EACH	611.0652 INLET COVERS TYPE T EACH	RIM/ PVT ELEV	TOP OF STRUC ELEV	FLOWLINE ELEV	STR DEPTH FT
CATEGORY 0010																		
INL 1.1	167+43	STH 15 WB	1.5' RT				1				1				881.36	880.36	878.00	2.36
INL 1.2	167+50	STH 15 EB	16.4' LT			1			1						881.22	880.22	877.93	2.29
INL 1.3	167+50	STH 15 EB	1.5' LT				1				1				881.55	880.55	877.86	2.69
INL 1.4	167+50	STH 15 EB	27.5' RT				1				1				882.70	881.70	877.72	3.98
EW 1.5	167+50	STH 15 EB	67' RT														877.53	
INL 2.1	171+48	STH 15 EB	1.5' LT				1			1					883.53	882.53	878.14	4.39
INL 2.2	171+96.4	STH 15 EB	30.7' RT				1					1			883.20	882.20	877.87	4.33
INL 2.3	172+03.9	STH 15 EB	42.3' RT				1					1			882.89	881.89	877.80	4.09
INL 2.4	171+91.2	STH 15 EB	67.3' RT				1					1			882.53	881.53	877.67	3.86
EW 2.5	171+82.3	STH 15 EB	118' RT														877.38	
INL 3.1	175+50.2	STH 15 EB	27.1' RT				1			1					881.05	880.05	876.60	3.45
INL 3.2	175+50.4	STH 15 EB	32.7' RT				1			1					880.86	879.86	876.57	3.29
EW 3.3	175+54.7	STH 15 EB	80' RT														876.34	
INL 4.1	175+84.1	STH 15 WB	40.4' LT				1			1					880.54	879.54	876.67	2.87
INL 4.2	175+86.3	STH 15 WB	45.8' LT				1			1					880.39	879.39	876.63	2.76
INL 4.3	175+97.2	STH 15 WB	61.4' LT				1					1			880.10	879.10	876.50	2.60
EW 4.4	176+02	STH 15 WB	83' LT														876.28	
INL 5.1	178+75	STH 15 WB	1.5' RT				1			1					876.68	875.68	873.16	2.52
EW 5.2	178+75	STH 15 WB	36' RT														873.01	
INL 6.1	183+24	STH 15 WB	29.1' RT					1					1		867.80	867.80	864.58	3.22
EW 6.2	183+23	STH 15 WB	63' LT														863.79	
EW 7.1	17+80	CTH CB SB	64' LT														873.56	
INL 7.2	17+65.8	CTH CB SB	25.5' LT				1			1					878.25	877.25	873.35	3.90
INL 7.3	17+55	CTH CB SB	1.5' RT				1			1					878.62	877.62	873.19	4.43
MH 7.4	17+50.6	CTH CB NB	19.2' LT		1				1						877.31	?	873.09	?
INL 7.5	17+43	CTH CB NB	1.5' LT				1			1					878.25	877.25	872.97	4.28
INL 7.6	17+31.4	CTH CB NB	29.8' RT				1			1					877.56	876.56	872.78	3.78
EW 7.7	17+26	CTH CB NB	49.5' RT														872.66	
		CATEGORY SUBTOTAL		0	1	1	17	1	2	10	3	4	1	0				

CONTINUED ON NEXT PAGE

RIM / PVT ELEV = THE ELEVATION OF THE TOP OF COVER AT THE CURB & GUTTER FLANGE LINE / PAVEMENT EDGE.
STRUCTURE (STR) DEPTH = RIM / PVT ELEVATION MINUS FLOWLINE ELEVATION OF STRUCTURE MINUS 13" FOR STRUCTURES WITH TYPE T CASTINGS.
STRUCTURE (STR) DEPTH = RIM / PVT ELEVATION MINUS FLOWLINE ELEVATION OF STRUCTURE MINUS 12" FOR STRUCTURES WITH TYPE H, HM, H-S, AND B CASTINGS.
STRUCTURE (STR) DEPTH = RIM / PVT ELEVATION MINUS FLOWLINE ELEVATION OF STRUCTURE FOR TYPE MS CASTINGS
OFFSET = CENTER OF STRUCTURE FOR MANHOLES TYPE 1, TYPE 2 SPECIAL, TYPE 3, AND TYPE 8 INLETS
OFFSECT = END OF STRUCTURE FOR ENDWALLS

FILE NAME : Q\Misc Quantities\1146-39-00\misc_q_border.ppt PLOT DATE : _____ PLOT BY : Northeast Region PLOT NAME : _____ PLOT SCALE : 1:1

STORM SEWER SUMMARY

STRUCTURE ID	STATION	LOCATION	OFFSET	SPV.0060.01 INLETS TYPE 2 SPECIAL EACH	611.0201 MANHOLES TYPE 1 EACH	611.0301 INLETS TYPE 1 EACH	611.0303 INLETS TYPE 3 EACH	611.0305 INLETS TYPE 8 EACH	611.0606 INLET COVERS TYPE B EACH	611.0624 INLET COVERS TYPE H EACH	611.0627 INLET COVERS TYPE HM EACH	611.0639 INLET COVERS TYPE H-S EACH	611.0642 INLET COVERS TYPE MS EACH	611.0652 INLET COVERS TYPE T EACH	RIM/ PVT ELEV	TOP OF STRUC ELEV	FLOWLINE ELEV	STR DEPTH FT
CATEGORY 0010																		
INL 8.1	76+22	CIRC RDWY	1.5' LT	1										1	881.32	880.24	876.30	3.94
INL 8.2	76+34	CIRC RDWY	1.5' LT	1										1	881.36	880.28	876.20	4.08
INL 8.3	18+88.1	CTH CB NB	25.5' RT				1			1					879.96	878.96	875.71	3.25
INL 8.4	18+87.1	CTH CB NB	31.3' RT				1			1					879.90	878.90	875.67	3.23
EW 8.5	18+05.5	CTH CB NB	64.4' RT														875.21	
			CATEGORY SUBTOTAL	2	0	0	2	0	0	2	0	0	0	2				
			CATEGORY TOTAL	2	1	1	19	1	2	12	3	4	1	2				
CATEGORY 0040																		
INL 9.1	21+70.8	CTH CB SB	37.5' LT				1					1			884.41	883.41	880.72	2.69
INL 9.2	21+97.2	CTH CB SB	37.5' LT				1			1					884.49	883.49	880.64	2.85
INL 9.3	21+89	CTH CB SB	1.5' RT				1			1					885.12	884.12	880.45	3.67
INL 9.4	21+86	CTH CB NB	1.5' LT				1								884.66	883.66	880.34	3.32
INL 9.5	21+58.2	CTH CB NB	1.5' LT				1					1			884.30	883.30	880.22	3.08
EW 9.6	77+52.4	CIRC RDWY	90.3' RT														879.91	
INL 10.1	27+00	CTH CB SB	4.2' RT				1				1				884.68	883.68	880.50	3.18
INL 10.2	27+87	CTH CB SB	29.5' LT				1				1				883.72	882.72	880.52	2.20
MH 10.3	27+50	CTH CB NB	11.0' LT		1				1						883.85	882.85	880.26	2.59
INL 10.4	27+50	CTH CB NB	1.5' LT				1				1				884.65	883.65	880.20	3.39
EW 10.5	27+50	CTH CB NB	50.7' RT														879.92	
INL 11.1	30+52	CTH CB SB	32.8' LT				1				1				882.26	881.26	879.15	2.11
INL 11.2	31+06	CTH CB SB	3.5' RT				1				1				882.42	881.42	878.83	2.59
INL 11.3	31+06.7	CTH CB SB	7.4' RT				1					1			882.33	881.33	878.81	2.52
EW 11.4	31+06.6	CTH CB NB	46.9' RT														878.50	
EW 12.1	31+25	CTH CB NB	53.4' RT														878.23	
EW 12.2	32+25	CTH CB NB	44.1' RT														877.73	
			CATEGORY TOTAL	0	1	0	11	0	1	2	5	3	0	0				
			PROJECT TOTAL	2	2	1	30	1	3	14	8	7	1	2				

RIM / PVT ELEV = THE ELEVATION OF THE TOP OF COVER AT THE CURB & GUTTER FLANGE LINE / PAVEMENT EDGE.
STRUCTURE (STR) DEPTH = RIM / PVT ELEVATION MINUS FLOWLINE ELEVATION OF STRUCTURE MINUS 13" FOR STRUCTURES WITH TYPE T CASTINGS.
STRUCTURE (STR) DEPTH = RIM / PVT ELEVATION MINUS FLOWLINE ELEVATION OF STRUCTURE MINUS 12" FOR STRUCTURES WITH TYPE H, HM, H-S, AND B CASTINGS.
STRUCTURE (STR) DEPTH = RIM / PVT ELEVATION MINUS FLOWLINE ELEVATION OF STRUCTURE FOR TYPE MS CASTINGS
OFFSET = CENTER OF STRUCTURE FOR MANHOLES TYPE 1, TYPE 2 SPECIAL, TYPE 3, AND TYPE 8 INLETS
OFFSECT = END OF STRUCTURE FOR ENDWALLS

PIPE UNDERDRAIN WRAPPED 6-INCH

STATION	LOCATION	612.0406 LF
CATEGORY 0010		
76+20 - 76+37	CIRC RDWY	40
171+91	STH 15 EB RT	20
171+96	STH 15 EB RT	20
172+04	STH 15 EB RT	20
175+97	STH 15 WB LT	20
	CATEGORY TOTAL	120
CATEGORY 0040		
21+71	CTH CB SB LT	20
	CATEGORY TOTAL	20
	PROJECT TOTAL	140

CONCRETE MEDIAN SLOPED NOSE

STATION	LOCATION	620.0300 SF	REMARKS
CATEGORY 0010			
171+50	STH 15 EB RT	70	TYPE 1
172+87	STH 15 EB LT	15	TYPE 2
172+73	STH 15 WB RT	24	TYPE 2
75+53	CIRC RDWY RT	30	TYPE 2
19+53	CTH CB NB LT	20	TYPE 2
19+58	CTH CBSB RT	24	TYPE 2
18+82	CTH CB NB RT	28	TYPE 1
174+82	STH 15 EB LT	24	TYPE 2
174+69	STH 15 WB RT	20	TYPE 2
175+92	STH 15 WB LT	40	TYPE 1
77+45	CIRC RDWY RT	17	TYPE 2
	CATEGORY TOTAL	312	
CATEGORY 0040			
31+12	CTH CB SB RT	42	TYPE 1
21+50	CTH CB NB LT	24	TYPE 2
21+60	CTH CB SB RT	20	TYPE 2
	CATEGORY TOTAL	86	
	PROJECT TOTOAL	398	

DUST CONTROL SURFACE TREATMENT

STATION	TO	STATION	LOCATION	623.0200 SY
CATEGORY 0010				
167+18	-	187+75	STH 15 EB	10740
167+00	-	187+75	STH 15 WB	11990
16+50	-	19+50	CTH CB NB	1367
16+50	-	19+50	CTH CB SB	1200
			CATEGORY TOTAL	25297
CATEGORY 0040				
21+70	-	33+75	CTH CB NB	6493
21+70	-	33+75	CTH CB SB	5700
			CATEGORY TOTAL	12193
			PROJECT TOTAL	37490

3

LANDSCAPING SUMMARY

LOCATION	625.0105 TOPSOIL CY	625.0500 SALVAGED TOPSOIL SY	629.0210 FERTILIZER TYPE B CWT	630.0200 SEEDING TEMPORARY LB	630.0110 SEEDING MIXTURE NO. 10 LB	630.0130 SEEDING MIXTURE NO. 30 LB
CATEGORY 0010						
STH 15 LT - BEGINNING OF PROJECT TO CTH CB		2662	1.68		35.94	
SW QUADRANT		2912	1.83		39.31	
SE QUADRANT		8382	5.28		113.16	
STH 15 LT - CTH CB TO END OF PROJECT		5208	3.28		70.31	
STH 15 - EAST LEG MEDIAN		6309	3.97			113.56
CTH CB - SOUTH LEG MEDIAN		1012	0.64			18.22
STH 15 - WEST LEG MEDIAN		2162	1.36			38.92
CIRCULATORY ISLAND	972					
UNDISTRIBUTED				25		
CATEGORY TOTAL	972	28647	18.0	25.0	258.7	170.7
CATEGORY 0040						
CTH CB LT - NORTH LEG		1705	1.07		23.02	
CTH CB RT - NORTH LEG		3234	2.04		43.66	
CTH CB - NORTH LEG MEDIAN		1888	1.19			33.98
UNDISTRIBUTED				25		
CATEGORY TOTAL	0	6827	4.3	25.00	66.7	34.0
PROJECT TOTAL	972	35474	22.3	50	325.4	204.7

MULCHING

STATION	TO	STATION	LOCATION	627.0200 SY
CATEGORY 0010				
167+00	-	173+00	STH 15 LT	758
167+00	-	171+47	STH 15 MEDIAN	666
176+25	-	188+00	STH 15 MEDIAN	2126
176+00	-	186+50	STH 15 RT	3209
			PROJECT TOTAL	6759

SILT FENCE SUMMARY

STATION	TO	STATION	LOCATION	628.1504 SILT FENCE LF	628.1520 SILT FENCE MAINTENANCE LF
CATEGORY 0010					
168+25	-	172+50	STH 15 EB RT	425	425
170+00	-	171+50	STH 15 WB LT	150	150
174+80	-	175+50	STH 15 EB RT	70	70
184+00	-	188+00	STH 15 EB RT	400	400
182+25	-	188+00	STH 15 WB LT	575	575
16+50	-	19+50	CTH CB SB LT	125	125
16+50	-	19+50	CTH CB NB RT	175	175
			UNDISTRIBUTED	750	750
			CATEGORY TOTAL	2670	2670
CATEGORY 0040					
21+75	-	33+75	CTH CB SB LT	1125	1125
			CATEGORY TOTAL	1125	1125
			PROJECT TOTAL	3795	3795

3

MOBILIZATIONS EROSION CONTROL AND MOBILIZATIONS EMERGENCY EROSION CONTROL

LOCATION	628.1905 MOBILIZATIONS EROSION CONTROL EACH	628.1910 MOBILIZATIONS EMERGENCY EROSION CONTROL EACH
CATEGORY 0010		
STH 15 & CTH CB ROUNDABOUT	2	2
PROJECT TOTAL	2	2

EROSION MAT CLASS I TYPE A

STATION	TO	STATION	LOCATION	628.2002 SY
CATEGORY 0010				
167+00	-	169+30	STH 15 LT	615
178+25	-	188+00	STH 15 MEDIAN	2936
175+50	-	188+00	STH 15 RT	4185
182+25	-	188+00	STH 15 LT	2784
			CATEGORY TOTAL	10520
CATEGORY 0040				
24+25	-	32+50	CTH CB RT	2606
			CATEGORY TOTAL	2606
			PROJECT TOTAL	13126

EROSION MAT URBAN CLASS I TYPE B

STATION	TO	STATION	LOCATION	628.2008 SY
CATEGORY 0010				
167+00	-	171+47	STH 15 MEDIAN	807
196+30	-	173+00	STH 15 LT	1284
167+00	-	173+00	STH 15 RT	1708
176+25	-	181+42	STH 15 MEDIAN	1247
174+50	-	182+25	STH 15 LT	2427
16+50	-	19+75	CTH CB RT	850
16+50	-	19+75	CTH CB LT	750
16+50	-	18+60	CTH CB MEDIAN	750
			CATEGORY TOTAL	9823
CATEGORY 0040				
22+00	-	32+50	CTH CB LT	1690
22+00	-	24+25	CTH CB RT	984
23+00	-	28+25	CTH CB MEDIAN	1888
			CATEGORY TOTAL	4562
			PROJECT TOTAL	14385

INLET PROTECTION SUMMARY

STATION	LOCATION	628.7005 INLET PROTECTION TYPE A EACH	628.7010 INLET PROTECTION TYPE B EACH	628.7015 INLET PROTECTION TYPE C EACH
CATEGORY 0010				
167+43 WB	INLET 1.1		1	
167+50 EB	INLET 1.2	1		
167+50 EB	INLET 1.3		1	
167+50 EB	INLET 1.4		1	
171+48 EB	INLET 2.1			1
171+96.4 EB	INLET 2.2			1
172+03.9 EB	INLET 2.3			1
171+91.2 EB	INLET 2.4			1
175+50.2 EB	INLET 3.1			1
175+50.4 EB	INLET 3.1			1
175+84.1 WB	INLET 4.1			1
175+86.3 WB	INLET 4.2			1
175+97.2 WB	INLET 4.3			1
178+75 WB	INLET 5.1			1
188+24 WB	INLET 6.1	1		
17+68.8 SB	INLET 7.2			1
17+55 SB	INLET 7.3			1
17+50.6 NB	MANHOLE 7.4	1		
17+43 NB	INLET 7.5			1
17+31.4 NB	INLET 7.6			1
76+22 CIRC	INLET 8.1		1	
76+34 CIRC	INLET 8.2		1	
18+88.1 NB	INLET 8.3			1
18+87.1 NB	INLET 8.4			1
	CATEGORY TOTAL	3	5	16
CATEGORY 0040				
21+70.8 SB	INLET 9.1			1
21+97.2 SB	INLET 9.2			1
21+89 SB	INLET 9.3			1
21+58.2 NB	INLET 9.4			1
27+00 SB	INLET 10.1		1	
27+87 SB	INLET 10.2		1	
27+87 SB	MANHOLE 10.3	1		
27+50 NB	INLET 10.4		1	
30+52 SB	INLET 11.1		1	
31+06 SB	INLET 11.2		1	
31+06.7 SB	INLET 11.3		1	
	CATEGORY TOTAL	1	6	4
	PROJECT TOTAL	4	11	20

TEMPORARY DITCH CHECKS

STATION	LOCATION	628.7504 LF
CATEGORY 0010		
167+00	STH 15 WB LT	18
168+25	STH 15 WB LT	18
171+50	STH 15 EB RT	18
177+00	STH 15 WB LT	18
182+00	STH 15 EB LT	18
182+25	STH 15 WB LT	18
183+25	STH 15 EB RT	18
185+00	STH 15 EB LT	18
188+00	STH 15 EB LT	18
188+00	STH 15 EB RT	18
188+00	STH 15 WB LT	18
17+25	CTH CB NB RT	18
18+00	CTH CB SB LT	18
	UNDISTRIBUTED	24
	CATEGORY TOTAL	258
CATEGORY 0040		
31+50	CTH CB SB LT	18
33+25	CTH CB NB RT	18
	CATEGORY TOTAL	36
	PROJECT TOTAL	294

ROCK BAGS

STATION	LOCATION	628.7570 EACH
CATEGORY 0010		
167+00	STH 15 WB LT	4
168+25	STH 15 WB LT	4
188+00	STH 15 WB LT	4
188+00	STH 15 EB RT	4
17+25	CTH CB NB RT	4
	UNDISTRIBUTED	6
	CATEGORY TOTAL	26
	PROJECT TOTAL	26

CULVERT PIPE CHECKS

STATION	LOCATION	628.7555 EACH
CATEGORY 0010		
17+90	CTH CB SB LT	3
	CATEGORY TOTAL	3
CATEGORY 0040		
31+30	CTH CB NB RT	3
	CATEGORY TOTAL	3
	PROJECT TOTAL	6

MARKERS CULVERT END

STATION	LOCATION	633.5200 EACH
CATEGORY 0010		
167+50	STH 15 EB RT	1
171+82	STH 15 EB RT	1
175+55	STH 15 EB RT	1
176+02	STH 15 WB LT	1
178+75	STH 15 WB RT	1
183+23	STH 15 WB LT	1
17+26	CTH CB NB RT	1
17+80	CTH CB SB LT	1
18+06	STH CB NB RT	1
77+52	CIRCULATORY ROADWAY RT	1
	CATEGORY TOTAL	10
CATEGORY 0040		
27+50	CTH CB NB RT	1
31+07	CTH CB NB RT	1
	CATEGORY TOTAL	2
	PROJECT TOTAL	12

3

ERECTION OF TYPE II SIGNS AND SUPPORTS

SIGN NO.	LOCATION	SIGN CODE	W X H	* 637.0202 SIGNS REFLECTIVE TYPE II S.F.	* 634.0612 POSTS WOOD 4x6x12 EACH	* 634.0614 POSTS WOOD 4x6x14 EACH	* 634.0616 POSTS WOOD 4x6x16 EACH	REMARKS
CATEGORY 0010								
1	STH 15 W. OF CTH CB	R4-7	24" X 30"	5.00		1		
2	"	J1-1	24" X 39"	6.50		1		CTH CB, SEE PLAN SHEET
3	"	R2-1	24" X 30"	5.00		1		45 MPH
4	"	W2-6	30" X 30"	6.25			1	
4A	"	W2-6P	30" X 16"	3.33				MOUNT BELOW SIGN #4
4B	"	W13-1	18" X 18"	2.25				15 MPH, MOUNT BELOW SIGN #4A
5	"	W3-2	36" X 36"	9.00		1		
6	"	J4-1	24" X 36"	6.00		1		STH 15, SEE PLAN SHEET
7	VACANT							
7A	VACANT							
8	STH 15 ISLAND W. OF CTH CB	W12-1D	24" X 24"	4.00	1			
9	STH 15 MEDIAN W. OF CTH CB	R1-2	36" X 31"	3.88			1	
9A	"	R6-2R	24" X 30"	5.00				MOUNT BELOW SIGN #9
10	"	D1-1	42" X 30"	8.75		1		SEE SIGN DETAIL
11	STH 15 ISLAND W. OF CTH CB	R1-2	36" X 31"	3.88			1	
11A	"	R6-2R	24" X 30"	5.00				MOUNT BELOW SIGN #11
12	STH 15 AT ROUNDABOUT	R1-2	36" X 31"	3.88		1		
12A	"	R1-54	24" X 15"	2.50				MOUNT BELOW SIGN #12
13	IN ROUNDABOUT	R6-1R	36" X 12"	3.00		1		
13A	"	R6-4B	48" X 18"	6.00				MOUNT BELOW SIGN #13
14	"	R6-1R	36" X 12"	3.00		1		
14A	"	R6-4B	48" X 18"	6.00				MOUNT BELOW SIGN #14
15	STH 15 AT ROUNDABOUT	R1-2	36" X 31"	3.88		1		
15A	"	R1-54	24" X 15"	2.50				MOUNT BELOW SIGN #15
16	STH 15 ISLAND E. OF CTH CB	R1-2	36" X 31"	3.88		1		
16A	"	R1-54	24" X 15"	2.50				MOUNT BELOW SIGN #16
17	"	W12-1D	24" X 24"	4.00	1			
18	STH 15 MEDIAN E. OF CTH CB	D1-1	42" X 30"	8.75		1		SEE SIGN DETAIL
19	"	R1-2	36" X 31"	3.88			1	
19A	"	R6-2R	24" X 30"	5.00				MOUNT BELOW SIGN #14
20	VACANT							
21	VACANT							
22	STH 15 E. OF CTH CB	W3-2	36" X 36"	9.00		1		
23	"	J4-1	36" X 54"	13.50			1	STH 15, SEE PLAN SHEET
24	"	W2-6	30" X 30"	6.25			1	
24A	"	W2-6P	30" X 16"	3.33				MOUNT BELOW SIGN #19
24B	"	W13-1	18" X 18"	2.25				15 MPH, MOUNT BELOW SIGN #19A
25	"	R2-1	36" X 48"	12.00		1		50 MPH
25A	"	J1-1	24" X 39"	6.50		1		CTH CB, SEE PLAN SHEET
	TOTALS =			185.45	2	15	6	

* ADDITIONAL QUANTITIES SHOWN ELSEWHERE

ERECTION OF TYPE II SIGNS AND SUPPORTS

SIGN NO.	LOCATION	SIGN CODE	W X H	* 637.0202 SIGNS REFLECTIVE TYPE II S.F.	* 634.0612 POSTS WOOD 4x6x12 EACH	* 634.0614 POSTS WOOD 4x6x14 EACH	* 634.0616 POSTS WOOD 4x6x16 EACH	REMARKS
CATEGORY 0010								
26	VACANT							
27	CTH CB S. OF STH 15	W2-6	30" X 30"	6.25			1	
27A	"	W2-6P	30" X 16"	3.33				MOUNT BELOW SIGN #23
27B	"	W13-1	18" X 18"	2.25				15 MPH, MOUNT BELOW SIGN #23A
28	"	M1-5A	24" X 24"	4.00	1			CTH CB, SEE PLAN SHEET
29	"	W3-2	36" X 36"	9.00		1		
30	VACANT							
31	VACANT							
32	CTH CB ISLAND AT STH 15	W12-1D	24" X 24"	4.00	1			
33	CTH CB S. OF STH 15	J3-1	24" X 57"	9.50			1	STH 15, SEE PLAN SHEET
34	"	D1-1	36" X 18"	4.50	1			SEE SIGN DETAIL
35	CTH CB MEDIAN AT STH 15	R1-2	36" X 31"	3.88			1	
35A	"	R6-2R	24" X 30"	5.00				MOUNT BELOW SIGN #35
36	CTH CB ISLAND AT STH 15	R1-2	36" X 31"	3.88		1		
36A	"	R1-54	24" X 15"	2.50				MOUNT BELOW SIGN #36
37	VACANT							
37A	VACANT							
38	IN ROUNDABOUT	R6-1R	36" X 12"	3.00		1		
38A	"	R6-4B	48" X 18"	6.00				MOUNT BELOW SIGN #38
39	"	R6-1R	36" X 12"	3.00		1		
39A	"	R6-4B	48" X 18"	6.00				MOUNT BELOW SIGN #39
40	CTH AB AT ROUNDABOUT	R1-2	36" X 31"	3.88		1		
40A	"	R1-54	24" X 15"	2.50				MOUNT BELOW SIGN #40
43	VACANT							
44	VACANT							
49	STH 15, W. OF CTH CB	R3-6XL	42" X 48"	14.00				MOUNT ON SIGN BRIDGE
50	"	R3-5A	42" X 48"	14.00				"
51	"	R3-5R	42" X 48"	14.00				"
52	"	R3-5L	42" X 48"	14.00				"
53	STH 15, E. OF CTH CB	R3-5R	42" X 48"	14.00				"
54	"	R3-5A	42" X 48"	14.00				"
55	"	R3-5A	42" X 48"	14.00				"
56	"	R3-6XL	42" X 48"	14.00				"
57	CTH CB, S. OF STH 15	R3-5XL	42" X 48"	14.00				"
58	"	R3-6L	42" X 48"	14.00				"
59	"	R3-5R	42" X 48"	14.00				"
	TOTALS =			236.47	3	5	3	
	CATEGORY TOTAL =			421.92	5	20	9	

* ADDITIONAL QUANTITIES SHOWN ELSEWHERE

ERECTION OF TYPE II SIGNS AND SUPPORTS

SIGN NO.	LOCATION	SIGN CODE	W X H	* 637.0202 SIGNS REFLECTIVE TYPE II S.F.	* 634.0612 POSTS WOOD 4x6x12 EACH	* 634.0614 POSTS WOOD 4x6x14 EACH	* 634.0616 POSTS WOOD 4x6x16 EACH	REMARKS
CATEGORY 0040								
41	CTH CB MEDIAN AT STH 15	R1-2	36" X 31"	3.88			1	
41A	"	R6-2R	24" X 30"	5.00				MOUNT BELOW SIGN #41
42	CTH CB ISLAND AT STH 15	D1-1	36" X 18"	4.50	1			SEE SIGN DETAIL
45	CTH CB N. OF STH 15	W3-2	36" X 36"	9.00			1	
46	"	W14-1	30" X 30"	6.25		1		
47	"	W2-6	30" X 30"	6.25			1	
47A	"	W2-6P	30" X 16"	3.33				MOUNT BELOW SIGN #37
47B	"	W13-1	18" X 18"	2.25				15 MPH, MOUNT BELOW SIGN #37A
48	"	J1-1	24" X 39"	6.50		1		STH 15, SEE PLAN SHEET
60	CTH CB, N. OF STH 15	R3-6R	42" X 48"	14.00				MOUNT ON SIGN BRIDGE
61	"	R3-6L	42" X 48"	14.00				"
62	"	R3-5XL	42" X 48"	14.00				"
63	FUTURE NEUBERT RD., W. OF CTH CB	W5-56	18" X 18"	2.25	1			
64	"	W5-56	18" X 18"	2.25	1			
65	"	W5-56	18" X 18"	2.25	1			
66	"	W5-56	18" X 18"	2.25	1			
67	"	W5-56	18" X 18"	2.25	1			
68	"	W5-56	18" X 18"	2.25	1			
69	CTH CB, N. OF FUTURE NEUBERT RD	W5-56	18" X 18"	2.25	1			
70	"	W5-56	18" X 18"	2.25	1			
71	"	W5-56	18" X 18"	2.25	1			
72	"	W5-56	18" X 18"	2.25	1			
73	"	W5-56	18" X 18"	2.25	1			
74	"	W5-56	18" X 18"	2.25	1			
75	FUTURE NEUBERT RD., E OF CTH CB	W5-56	18" X 18"	2.25	1			
76	"	W5-56	18" X 18"	2.25	1			
77	"	W5-56	18" X 18"	2.25	1			
78	"	W5-56	18" X 18"	2.25	1			
80	"	W5-56	18" X 18"	2.25	1			
	CATEGORY TOTAL =			129.46	19	2	3	
	TOTALS =			551.38	24	22	12	

* ADDITIONAL QUANTITIES SHOWN ELSEWHERE

MOVING SIGNS TYPE II

SIGN NO.	LOCATION	638.2102 MOVING SIGNS TYPE II EACH	638.4000 MOVING SMALL SIGN SUPPORTS EACH	REMARKS
CATEGORY 0010				
209	STH 15 W. OF CTH CB	1	1	MOVE SIGN FOR CONST.
226	STH 15 E. OF CTH CB	1	1	"
	PROJECT TOTAL	2	2	

3

REMOVING, TYPE II SIGNS AND REMOVING SMALL SIGN SUPPORTS

SIGN	LOCATION	SIGN CODE	638.2602 REMOVING SIGNS TYPE II EACH	638.3000 REMOVING SMALL SIGN SUPPORTS EACH	REMARKS
CATEGORY 0010					
200	STH 15 W. OF CTH CB	I2-3	1	2	
201	"	R2-1	1	1	
202	STH 15 MEDIAN, W. OF CTH CB	R4-7	1	1	
203	STH 15 W. OF CTH CB	R5-1	1	1	
204	"	R3-9B	1		
205	"	W3-3	1	1	
206	STH 15 MEDIAN, W. OF CTH CB	W3-3	1	1	
207	STH 15 W. OF CTH CB	R5-1A	1	1	
208	"	R2-1	1		
209	SEE MOVING SIGNS				
210	"	J12-1	2	1	
211	"	R5-1	1		
212	"	J4-1	2	1	
213	STH 15 MEDIAN AT CTH CB	R4-7	1		REMOVE FROM TRAFFIC SIGNAL
214	"	R3-2	1		REMOVE FROM TRAFFIC SIGNAL
215	STH 15 AT CTH CB	R1-2	1	1	
216	CTH CB MEDIAN AT STH 15	R4-7	1		REMOVE FROM TRAFFIC SIGNAL
217	"	R1-1F	1		REMOVE FROM TRAFFIC SIGNAL
218	CTH CB AT STH 15	R6-2L	1		REMOVE FROM LIGHT POLE
219	CTH CB MEDIAN AT STH 15	R5-1	1		REMOVE FROM TRAFFIC SIGNAL
220	CTH CB AT STH 15	R5-1	1		REMOVE FROM LIGHT POLE
221	CTH CB S. OF STH 15	J13-1	2	1	
222	"	R5-1A	1		
223	CTH CB ISLAND AT STH 15	R1-1F	1		REMOVE FROM TRAFFIC SIGNAL
223A	"	R6-3	1		REMOVE FROM TRAFFIC SIGNAL
224	CTH CB AT STH 15	R1-2	1	1	
225	STH 15 E. OF CTH CB	R3-1	1	1	
226	SEE MOVING SIGNS				
227	"	R5-1	1	1	
228	"	J12-1	2		
229	STH 15 MEDIAN E. OF CTH CB	J12-1	2	1	
230	STH 15 E. OF CTH CB	J4-1	2	1	
231	STH 15 MEDIAN E. OF CTH CB	R3-55L	1	1	
232	STH 15 E. OF CTH CB	R5-1A	1	1	
233	"	W3-3	1	1	
234	"	J1-1	2	1	
		PROJECT TOTAL	41	21	

OVERHEAD SIGN SUPPORT (STRUCTURE)

STATION	LOCATION	641.8100.01 LS	641.8100.02 LS	641.8100.03 LS	641.8100.04 LS
CATEGORY 0010					
170+75	STH 15 EB (S-44-0055)	1			
176+25	STH 15 WB (S-44-0056)		1		
17+80	CTH CB NB (S-44-0057)			1	
	CATEGORY TOTAL	1	1	1	0
CATEGORY 0040					
23+00	CTH CB SB (S-44-0058)				1
	CATEGORY TOTAL	0	0	0	1
	PROJECT TOTAL	1	1	1	1

TRAFFIC CONTROL SUMMARY

LOCATION	APPROX. SERVICE PERIOD DAYS	643.0300 DRUMS NO. IN SERVICE	643.0300 DRUMS DAYS	*643.0420 BARRICADES TYPE III NO. IN SERVICE	*643.0420 BARRICADES TYPE III DAYS	643.0705 WARNING LIGHTS TYPE A NO. IN SERVICE	643.0705 WARNING LIGHTS TYPE A DAYS	643.0900 SIGNS NO. IN SERVICE	643.0900 SIGNS DAYS	*643.0905.S TRAFFIC CONTROL COVERING SIGNS NO. IN SERVICE	*643.0905.S TRAFFIC CONTROL COVERING SIGNS DAYS	643.1050 TRAFFIC CONTROL SIGNS PCMS NO. IN SERVICE	643.1050 TRAFFIC CONTROL SIGNS PCMS DAYS
CATEGORY 0010													
STH 15 & CTH CB	108	10	1080										
STH 15 EB AT GREENWOOD DR	7											1	7
STH 15 EB STA 167+00	108			6	648	8	864	1	60				
STH 15 WB STA 189+00	108			6	648	8	864	1	60				
STH 15 WB AT MAYFLOWER DR	7											1	7
STH 15 AT McCARTHY RD	108							1	60				
STH 15 / CTH CB ROUNDABOUT	14	47	658	10	140	12	168	2	28	5	70		
	TOTAL		1738		1436		1896		208		70		14

* ADDITIONAL QUANTITIES ARE SHOWN ELSEWHERE

TRAFFIC CONTROL DETOUR SIGNS AND COVERING SIGNS

SIGN NO.	LOCATION	SIGN CODE	SIZE W X H	NUMBER IN SERVICE	APPROX. SERVICE PERIOD 108 DAYS	643.3000 DETOUR SIGNS DAYS	* 643.0420 BARRICADES TYPE III DAYS	* 643.0905.S COVERING SIGNS EACH	REMARKS
CATEGORY 0010									
1	AT THE BEGINNING OF 2-4 TRANSITION	W20-2-A	48"x48"	1	108	108			
2	ACROSS FROM SIGN # 1 (MEDIAN SIDE)	W20-2-A	48"x48"	1	108	108	108		
3	150' E OF LILY OF THE VALLEY INTERSECTION ON STH 15	M4-8	24"x12"	1	108	108			
	"	M3-2	24"x12"	1	108	108			
	"	M1-6	24"x24"	1	108	108			15
	"	M5-1-R	21"x21"	1	108	108			
4	ACROSS FROM SIGN # 3 (MEDIAN SIDE)	M4-8	24"x12"	1	108	108			
	"	M3-2	24"x12"	1	108	108			
	"	M1-6	24"x24"	1	108	108			15
	"	M5-1-R	21"x21"	1	108	108			
5	MODIFY J2-3 (N-76-AH LT; E-15-AH RT; S-76-AH RT)	M4-8	24"x12"	1	108	108			
	"	M3-2	EXISTING						
	"	M1-6	EXISTING						
	"	M5-1-R	EXISTING						
6	ACROSS FROM SIGN # 5 (MEDIAN SIDE)	M4-8	24"x12"	1	108	108			
	"	M3-2	24"x12"	1	108	108			
	"	M1-6	24"x24"	1	108	108			15
	"	M5-1-R	21"x21"	1	108	108			
7	RT OF J3-2 (N-76-LT; S-76-RT)	M4-8	24"x12"	1	108	108			
	"	M3-2	24"x12"	1	108	108			
	"	M1-6	24"x24"	1	108	108			15
	"	M6-1	21"x21"	1	108	108			RIGHT
8	J4-1 (EAST 15)							1	EAST-15
9	SE QUAD OF STH 15 & STH 76 INTERSECTION	R11-3	60"x30"	1	108	108	108		2 MILES
10	RT OF J4-1 (SOUTH 76)	M4-8	24"x12"	1	108	108			
	"	M3-2	24"x12"	1	108	108			
	"	M1-6	24"x24"	1	108	108			15
11	MODIFY J1-1 (JCT 15)	M4-8-A	24"x18"	1	108	108			
	"	M1-6	EXISTING						
12	150' S OF SCHOOL RD INTERSECTION ON STH 76	M4-8	24"x12"	1	108	108			
	"	M3-2	24"x12"	1	108	108			
	"	M1-6	24"x24"	1	108	108			15
13	150' N OF SCHOOL RD INTERSECTION ON STH 76	M4-8	24"x12"	1	108	108			
	"	M3-4	24"x12"	1	108	108			
	"	M1-6	24"x24"	1	108	108			15
14	LT OF J3-3 (E-96-AH LT; S-76-AH; W-96-AH RT)	M4-8	24"x12"	1	108	108			
	"	M3-2	24"x12"	1	108	108			
	"	M1-6	24"x24"	1	108	108			15
	"	M5-1-L	21"x21"	1	108	108			
15	200' N OF STH 96 INTERSECTION ON STH 76	M4-8	24"x12"	1	108	108			
	"	M3-4	24"x12"	1	108	108			
	"	M1-6	24"x24"	1	108	108			15

* ADDITIONAL QUANTITIES SHOWN ELSEWHERE

CONTINUED

TRAFFIC CONTROL DETOUR SIGNS AND COVERING SIGNS CONTINUED

SIGN NO.	LOCATION	SIGN CODE	SIZE W X H	NUMBER IN SERVICE	APPROX. SERVICE PERIOD 108 DAYS	643.3000 DETOUR SIGNS DAYS	* 643.0420 BARRICADES TYPE III DAYS	* 643.0905.S COVERING SIGNS EACH	REMARKS
CATEGORY 0010									
16	LT OF J2-3 (E-96-LT; S-76-AH; W-96-RT)	M4-8	24"x12"	1	108	108			
	"	M3-2	24"x12"	1	108	108			
	"	M1-6	24"x24"	1	108	108			15
	"	M6-1	21"x21"	1	108	108			LEFT
17	LT OF J4-2 (E-96; TO-N-41)	M4-8	24"x12"	1	108	108			
	"	M3-2	24"x12"	1	108	108			
	"	M1-6	24"x24"	1	108	108			15
18	LT OF J2-3 (S-76-LT; W-96-AH; N-76-RT)	M4-8	24"x12"	1	108	108			
	"	M3-4	24"x12"	1	108	108			
	"	M1-6	24"x24"	1	108	108			15
	"	M6-1	21"x21"	1	108	108			RIGHT
19	LT OF J2-3 (S-76-AH LT; W-96-AH; N-76-AH RT)	M4-8	24"x12"	1	108	108			
	"	M3-4	24"x12"	1	108	108			
	"	M1-6	24"x24"	1	108	108			15
	"	M5-1-R	21"x21"	1	108	108			
20	RT OF J4-1 (E-96; TO-41) @ CTH CB	M4-8	24"x12"	1	108	108			
	"	M3-2	24"x12"	1	108	108			
	"	M1-6	24"x24"	1	108	108			15
21	RT OF J4-1 (W-96) @ CTH CB	M4-8	24"x12"	1	108	108			
	"	M3-4	24"x12"	1	108	108			
	"	M1-6	24"x24"	1	108	108			15
22	150' E OF MAYFLOWER RD INTERSECTION ON STH 96	M4-8	24"x12"	1	108	108			
	"	M3-2	24"x12"	1	108	108			
	"	M1-6	24"x24"	1	108	108			15
23	150' W OF MAYFLOWER RD INTERSECTION ON STH 96	M4-8	24"x12"	1	108	108			
	"	M3-4	24"x12"	1	108	108			
	"	M1-6	24"x24"	1	108	108			15
24	150' E OF MACARTHY RD INTERSECTION ON STH 96	M4-8	24"x12"	1	108	108			
	"	M3-2	24"x12"	1	108	108			
	"	M1-6	24"x24"	1	108	108			15
25	150' W OF MACARTHY RD INTERSECTION ON STH 96	M4-8	24"x12"	1	108	108			
	"	M3-4	24"x12"	1	108	108			
	"	M1-6	24"x24"	1	108	108			15
26	100' S OF SIGNAL AHEAD SIGN	M4-8	24"x12"	1	108	108			
	"	M3-4	24"x12"	1	108	108			
	"	M1-6	24"x24"	1	108	108			15
	"	M5-1-R	21"x21"	1	108	108			
27	RT OF J3-2 (E-96-LT; W-96-RT)	M4-8	24"x12"	1	108	108			
	"	M3-4	24"x12"	1	108	108			
	"	M1-6	24"x24"	1	108	108			15
	"	M6-1	21"x21"	1	108	108			RIGHT

* ADDITIONAL QUANTITIES SHOWN ELSEWHERE

CONTINUED

TRAFFIC CONTROL DETOUR SIGNS AND COVERING SIGNS CONTINUED

SIGN NO.	LOCATION	SIGN CODE	SIZE W X H	NUMBER IN SERVICE	APPROX. SERVICE PERIOD 108 DAYS	643.3000 DETOUR SIGNS DAYS	643.0420 BARRICADES TYPE III DAYS	643.0905.S COVERING SIGNS EACH	REMARKS
CATEGORY 0010									
28	RT OF J4-1 (N-41-USE LEFT LANE) MEDIAN SIDE	M4-8	24"x12"	1	108	108			
	"	M3-2	24"x12"	1	108	108			
	"	M1-6	24"x24"	1	108	108			15
	"	M5-1-L	21"x21"	1	108	108			
29	LT OF J3-1 (N-41-LT) MEDIAN SIDE	M4-8	24"x12"	1	108	108			
	"	M3-2	24"x12"	1	108	108			
	"	M1-6	24"x24"	1	108	108			15
	"	M6-1	21"x21"	1	108	108			LEFT
30	500' N OF STH 96 & NE RAMP INTERSECTION	M4-8-A	24"x18"	1	108	108			
	"	M1-6	24"x24"	1	108	108			15
31	TYPE 1 (15/00, NORTHLAND AVE-1 MILE)							1	STH 15
	1000' S OF SIGN # 31	M1-6	24"x24"	1	108	108			15
32	"	W20-2-A	48"x48"	1	108	108			
	ACROSS FROM SIGN # 32 (MEDIAN SIDE)	M1-6	24"x24"	1	108	108			15
33	"	W20-2-A	48"x48"	1	108	108			
34	TYPE 1 (15/00, NORTHLAND AVE-TILT RIGHT)							1	STH 15
35	LEFT OF SIGN # 34	M4-8	30"x15"	1	108	108			
	"	M3-4	30"x15"	1	108	108			
	"	M1-6	36"x36"	1	108	108			15
	"	M6-1	30"x30"	1	108	108			AHEAD
36	ACROSS FROM SIGN # 35 (MEDIAN SIDE)	M4-8	30"x15"	1	108	108			
	"	M3-4	30"x15"	1	108	108			
	"	M1-6	36"x36"	1	108	108			15
	"	M6-1	30"x30"	1	108	108			AHEAD
37	200' S OF E5-1 (EXIT ARROW)	M4-8	30"x15"	1	108	108			
	"	M3-4	30"x15"	1	108	108			
	"	M1-6	36"x36"	1	108	108			15
	"	M6-1	30"x30"	1	108	108			AHEAD
38	ACROSS FROM SIGN # 37 (MEDIAN SIDE)	M4-8	30"x15"	1	108	108			
	"	M3-4	30"x15"	1	108	108			
	"	M1-6	36"x36"	1	108	108			15
	"	M6-1	30"x30"	1	108	108			AHEAD
39	LT OF J4-1 (SOUTH 41)	M4-8	30"x15"	1	108	108			
	"	M3-4	30"x15"	1	108	108			
	"	M1-6	36"x36"	1	108	108			15
	"	M5-2-R	30"x30"	1	108	108			
40	ACROSS FROM SIGN # 39 (MEDIAN SIDE)	M4-8	30"x15"	1	108	108			
	"	M3-4	30"x15"	1	108	108			
	"	M1-6	36"x36"	1	108	108			15
	"	M5-2-R	30"x30"	1	108	108			

* ADDITIONAL QUANTITIES SHOWN ELSEWHERE

CONTINUED

TRAFFIC CONTROL DETOUR SIGNS AND COVERING SIGNS CONTINUED

SIGN NO.	LOCATION	SIGN CODE	SIZE W X H	NUMBER IN SERVICE	APPROX. SERVICE PERIOD 108 DAYS	643.3000 DETOUR SIGNS DAYS	* 643.0420 BARRICADES TYPE III DAYS	* 643.0905.S COVERING SIGNS EACH	REMARKS
CATEGORY 0010									
41	AT BEGINNING OF RAMP TAPER	M4-8	30"x15"	1	108	108			
	"	M3-4	30"x15"	1	108	108			
	"	M1-6	36"x36"	1	108	108			15
	"	M6-2	30"x30"	1	108	108			RIGHT
42	200' N OF WISCONSIN AVE EXIT SIGN	M1-6	36"x36"	1	108	108			
	"	W20-2-A	48"x48"	1	108	108			
43	ACROSS FROM SIGN # 42 (MEDIAN SIDE)	M1-6	36"x36"	1	108	108			
	"	W20-2-A	48"x48"	1	108	108			
44	LT OF TYPE 1 (96-WISCONSIN AVE- 1/2 MILE)	M4-8	30"x15"	1	108	108			
	"	M3-4	30"x15"	1	108	108			
	"	M1-6	36"x36"	1	108	108			15
	"	M5-2-R	30"x30"	1	108	108			
45	ACROSS FROM SIGN # 44 (MEDIAN SIDE)	M4-8	30"x15"	1	108	108			
	"	M3-4	30"x15"	1	108	108			
	"	M1-6	36"x36"	1	108	108			15
	"	M5-2-R	30"x30"	1	108	108			
46	AT BEGINNING OF RAMP TAPER	M4-8	30"x15"	1	108	108			
	"	M3-4	30"x15"	1	108	108			
	"	M1-6	36"x36"	1	108	108			15
	"	M6-2	30"x30"	1	108	108			RIGHT
46B	LT OF D1-2 (LAWERANCE UNIVERSITY-RT; FOX CITIES P.A.C.-RT)	M4-8	24"x12"	1	108	108			
	"	M3-4	24"x12"	1	108	108			
	"	M1-6	24"x24"	1	108	108			15
	"	M5-1-L	21"x21"	1	108	108			
46C	ISLAND GORE RT OF DUAL LEFT	M4-8	24"x12"	1	108	108			
	"	M3-4	24"x12"	1	108	108			
	"	M1-6	24"x24"	1	108	108			15
	"	M6-1	21"x21"	1	108	108			LEFT
46D	SW QUAD OF SE RAMP TERMINAL & STH 96 INTERSECTION	M4-8	24"x12"	1	108	108			
	"	M3-4	24"x12"	1	108	108			
	"	M1-6	24"x24"	1	108	108			15
	"	M6-1	21"x21"	1	108	108			LEFT
47	TYPE 1 (15/00/TO A- NORTHLAND AVE-3/4 MILE)							1	STH 15
48	TYPE 1 (15/00/TO A-NORTHLAND AVE-1/4 MILE; EXIT DOWN ARROW ONLY)							1	STH 15
49	TYPE 1 (15/00/TO A-NORTHLAND AVE-TILT RT; EXIT ONLY)							1	STH 15
50	J3-1 (W-15-TILT LEFT)							1	W-15-TILT LEFT
51	J3-2 (W-15-TILT LT; E-OO-TILT RT)							1	W-15-TILT LEFT
52	500' W OF J1-3 (JCT 15; JCT 41; END OO)	W20-2-A	48"x48"	1	108	108			
53	ACROSS FROM SIGN # 53 (MEDIAN SIDE)	W20-2-A	48"x48"	1	108	108			

* ADDITIONAL QUANTITIES SHOWN ELSEWHERE

CONTINUED

TRAFFIC CONTROL DETOUR SIGNS AND COVERING SIGNS CONTINUED

SIGN NO.	LOCATION	SIGN CODE	SIZE W X H	NUMBER IN SERVICE	APPROX. SERVICE PERIOD 108 DAYS	643.3000 DETOUR SIGNS DAYS	* 643.0420 BARRICADES TYPE III DAYS	* 643.0905.S COVERING SIGNS EACH	REMARKS
CATEGORY 0010									
54	MODIFY J3-3 (W-15-AH; S- 41-AH; N-41-TILT RT)	M4-8	24"x12"	1	108	108			
	"	M3-4	EXISTING						
	"	M1-6	EXISTING						
	"	M6-1	EXISTING						
55	ACROSS FROM SIGN # 54 (MEDIAN SIDE)	M4-8	24"x12"	1	108	108			
	"	M3-4	24"x12"	1	108	108			
	"	M1-6	24"x24"	1	108	108			15
	"	M6-1	21"x21"	1	108	108			AHEAD
56	MODIFY J3-3 (W-15-AH; S- 41-AH; N-41-TILT RT)	M4-8	24"x12"	1	108	108			
	"	M3-4	EXISTING						
	"	M1-6	EXISTING						
	"	M6-1	EXISTING						
57	ACROSS FROM SIGN # 56 (MEDIAN SIDE)	M4-8	24"x12"	1	108	108			
	"	M3-4	24"x12"	1	108	108			
	"	M1-6	24"x24"	1	108	108			15
	"	M6-1	21"x21"	1	108	108			AHEAD
58	MODIFY J2-3 (W-15-AH; S-41-AH RT)	M4-8	24"x12"	1	108	108			
	"	M3-4	EXISTING						
	"	M1-6	EXISTING						
	"	M5-1-R	21"x21"	1	108	108			
59	ACROSS FROM SIGN # 58 (MEDIAN SIDE)	M4-8	24"x12"	1	108	108			
	"	M3-4	24"x12"	1	108	108			
	"	M1-6	24"x24"	1	108	108			15
	"	M5-1-R	21"x21"	1	108	108			
60	D1-3 (OSHKOSH/MILWAUKEE TILT RT; AH-NEW LONDON)							1	AH-NEW LONDON
61	RT OF J3-1 (S-41-TILT RT)	M4-8	24"x12"	1	108	108			
	"	M3-4	24"x12"	1	108	108			
	"	M1-6	24"x24"	1	108	108			15
	"	M6-2	21"x21"	1	108	108			RIGHT
62	MODIFY J3-1 (W-15-AH)	M4-8	24"x12"	1	108	108			
	"	M3-4	EXISTING						
	"	M1-6	EXISTING						
	"	M6-2	21"x21"	1	108	108			RIGHT
63	MODIFY J3-1 (W-15-AH) @RAMP GORE	M4-8	24"x12"	1	108	108			
	"	M3-4	EXISTING						
	"	M1-6	EXISTING						
	"	M6-2	21"x21"	1	108	108			RIGHT
64	J4-1 (WEST 15)							1	WEST 15
65	NW QUAD OF NW RAMP & STH 15 INTERSECTION	R11-3	60"x30"	1	108	108	108		2 MILES
			PROJECT TOTAL			18,900	324	10	

* ADDITIONAL QUANTITIES SHOWN ELSEWHERE

PAVEMENT MARKING 4-INCH EPOXY

STATION	TO	STATION	LOCATION	646.0106 LF	REMARKS
CATEGORY 0010					
164+04	-	172+47	STH 15 WB RT	820	WHITE EDGELINE
164+04	-	172+47	STH 15 WB LT	845	YELLOW EDGELINE
172+32	-	172+40	STH 15 WB LT	10	YELLOW EDGELINE
172+57	-	173+44	STH 15 WB RT	120	WHITE EDGELINE
174+40	-	186+24	STH 15 WB RT	1200	WHITE EDGELINE
174+78	-	186+24	STH 15 WB LT	1160	YELLOW EDGELINE
167+18	-	172+65	STH 15 EB LT	550	YELLOW EDGELINE
167+18	-	172+65	STH 15 EB RT	540	WHITE EDGELINE
172+60	-	172+92	STH 15 EB RT	70	WHITE EDGELINE
172+75	-	172+92	STH 15 EB LT	20	YELLOW EDGELINE
174+70	-	186+24	STH 15 EB RT	1170	WHITE EDGELINE
174+80	-	186+24	STH 15 EB LT	1140	YELLOW EDGELINE
15+38	-	19+56	CTH CB SB RT	415	WHITE EDGELINE
15+38	-	19+56	CTH CB SB LT	415	YELLOW EDGELINE
15+38	-	19+56	CTH CB SB LT	100	WHITE LANE LINE
15+39	-	19+62	CTH CB NB LT	425	YELLOW EDGELINE
15+39	-	19+62	CTH CB NB RT	395	WHITE EDGELINE
15+39	-	19+62	CTH CB NB RT	63	WHITE LANE LINE
			CATEGORY TOTAL	9458	
CATEGORY 0040					
21+52	-	21+67	CTH CB NB LT	15	YELLOW EDGLEINE
21+51	-	21+74	CTH CB SB LT	23	YELLOW EDGELINE
21+75	-	29+58	CTH CB NB RT	905	WHITE EDGELINE
24+25		30+50	CTH CB NB RT	163	WHITE LANE LINE
21+67	-	31+10	CTH CB NB LT	943	YELLOW EDGELINE
21+81	-	30+88	CTH CB NB RT	760	WHITE EDGELINE
21+74	-	31+10	CTH CB SB LT	936	YELLOW EDGELINE
22+75	-	30+75	CTH CB SB LT	263	WHITE LANE LINE
			CATEGORY TOTAL	4008	
			PROJECT TOTAL	13466	

PAVEMENT MARKING GROOVED WET REFLECTIVE CONTRAST TAPE 4-INCH

STATION	TO	STATION	LOCATION	646.0841.S LF	REMARKS
CATEGORY 0010					
164+04	-	172+47	STH 15 WB	213	LANE LINE SKIP
169+32	-	172+47	STH 15 WB	75	LANE LINE SKIP
167+18	-	170+83	STH 15 EB	88	LANE LINE SKIP
175+44	-	186+24	STH 15 EB	275	LANE LINE SKIP
177+50	-	186+24	STH 15 WB	213	LANE LINE SKIP
			PROJECT TOTAL	863	

PAVEMENT MARKING GROOVED WET REFLECTIVE CONTRAST TAPE 8-INCH

STATION	TO	STATION	LOCATION	646.0843.S LF
CATEGORY 0010				
177+50	-	179+64	STH 15 EB RT	425
			PROJECT TOTAL	425

PAVEMENT MARKING 8-INCH EPOXY

STATION	TO	STATION	LOCATION	646.0126 LF	REMARKS
CATEGORY 0040					
29+89	-	30+98	CTH CB NB	111	CHANNELIZATION
			PROJECT TOTAL	111	

PAVEMENT MARKING GROOVED WET REFLECTIVE TAPE 4-INCH

STATION	TO	STATION	LOCATION	646.0881.S LF	REMARKS
CATEGORY 0010					
170+83	-	171+28	STH 15 EB	25	LANE LINE SKIP
176+00	-	176+25	STH 15 WB	13	LANE LINE SKIP
			PROJECT TOTAL	38	

PAVEMENT MARKING GROOVED WET REFLECTIVE TAPE 8-INCH

STATION TO STATION	LOCATION	646.0883.S LF	REMARKS
CATEGORY 0010			
169+60 - 173+00	STH 15 EB	631	GORE AREA & RT TURN SPLITTER ISLAND
170+83 - 172+90	STH 15 EB	392	THRU/LT TURN GORE
171+28 - 173+05	STH 15 EB	177	RT TURN LANES CHANNELIZING
174+65 - 176+00	STH 15 WB	135	THRU/LT CHANNELIZING
174+65 - 177+50	STH 15 WB	573	THRU/LT TURN GORE
174+65 - 176+50	STH 15 WB	369	GORE AREA & RT TURN SPLITTER ISLAND
17+80 - 19+71	CTH CB NB	185	THRU/LT CHANNELIZING
	STH 15 EB/ CTH CB NB	951	CTH CB NB RT TURN LANE GORE & SPLITTER
	CATEGORY TOTAL	3413	
CATEGORY 0040			
21+50 - 22+53	CTH CB SB	200	CHANNELIZING
	CATEGORY TOTAL	200	
	PROJECT TOTAL	3613	

PAVEMENT MARKING ISLAND NOSE EPOXY

LOCATION	647.0606 EACH	REMARKS
CATEGORY 0010		
CTH CB SOUTH LEG	1	MEDIAN
PROJECT TOTAL	1	

TEMPORARY PAVEMENT MARKING REMOVABLE TAPE 4-INCH

STATION	LOCATION	649.0400 LF	REMARKS
CATEGORY 0010			
169+65	STH 15 EB APPROACH	80	LT ARROW, COVER WITH BLACK TAPE.
170+85	STH 15 EB APPROACH	80	LT ARROW, COVER WITH BLACK TAPE.
172+65	STH 15 EB APPROACH	80	LT ARROW, COVER WITH BLACK TAPE.
75+85	CIRCULATORY ROADWAY	73	LT ARROW, COVER WITH BLACK TAPE.
77+75	CIRCULATORY ROADWAY	73	LT ARROW, COVER WITH BLACK TAPE.
175+60	STH 15 WB APPROACH	80	LT ARROW, COVER WITH BLACK TAPE.
176+20	STH 15 WB APPROACH	80	LT ARROW, COVER WITH BLACK TAPE.
177+40	STH 15 WB APPROACH	146	LT & RT ARROWS, COVER WITH BLACK TAPE.
	PROJECT TOTAL	692	

CONSTRUCTION STAKING STORM SEWER SYSTEM

LOCATION	650.4000 EACH
CATEGORY 0010	
STH 15 / CTH CB ROUNDABOUT	33
CATEGORY TOTAL	33
CATEGORY 0040	
CTH CB NORTH LEG	15
CATEGORY TOTAL	15
PROJECT TOTAL	48

CONSTRUCTION STAKING SUBGRADE

STATION	TO	STATION	LOCATION	650.4500 LF
CATEGORY 0010				
167+18	-	172+85	STH 15 EB	567
166+00	-	172+95	STH 15 WB	695
174+85	-	187+75	STH 15 EB	1290
174+70	-	187+75	STH 15 WB	1305
16+50	-	19+52	CTH CB NB	302
16+50	-	19+57	CTH CB SB	307
75+00	-	78+89	ROUNDABOUT	389
			CATEGORY TOTAL	4855
CATEGORY 0040				
21+61	-	33+75	CTH CB SB	1214
21+54	-	33+75	CTHCB NB	1221
0+25	-	2+50	NEUBERT RD	134
			CATEGORY TOTAL	2569
			PROJECT TOTAL	7424

CONSTRUCTION STAKING BASE

STATION	TO	STATION	LOCATION	650.5000 LF
CATEGORY 0010				
170+07	-	172+85	STH 15 EB	278
172+46	-	172+95	STH 15 WB	49
174+85	-	175+59	STH 15 EB	74
174+70	-	177+50	STH 15 WB	280
16+50	-	19+52	CTH CB NB	302
16+50	-	19+57	CTH CB SB	307
75+00	-	78+89	ROUNDABOUT	389
0+25	-	2+50	NEUBERT RD	134
			CATEGORY TOTAL	1813
CATEGORY 0040				
21+61	-	33+75	CTH CB NB	1214
21+54	-	33+75	CTH CB SB	1221
			CATEGORY TOTAL	2435
			PROJECT TOTAL	4248

CONSTRUCTIONS STAKING CURB GUTTER AND CURB & GUTTER

STATION	TO	STATION	LOCATION	650.5500 LF
CATEGORY 0010				
502+95		509+19	SW QUAD OF ROUNDABOUT	624
170+07		172+85	STH 15 EB LT	278
172+46		172+95	STH 15 WB RT	49
603+00		613+50	NW QUAD OF ROUNDABOUT	1050
174+85		175+59	STH 15 EB LT	74
174+70		177+50	STH 15 WB RT	280
552+33		556+22	SE QUAD OF ROUNDABOUT	389
654+91		660+65	NE QUAD OF ROUNDABOUT	574
16+50		19+52	CTH CB NB LT	302
16+50		19+57	CTH CB SB RT	307
300+00		302+00	BYPASS ISLAND SE QUAD	200
350+00		351+84	BYPASS ISLAND SE QUAD	184
400+00		401+07	BYPASS ISLAND NE QUAD	107
450+00		451+00	BYPASS ISLAND NE QUAD	100
200+00		201+47	BYPASS ISLAND SW QUAD	147
250+00		251+39	BYPASS ISLAND SW QUAD	139
			CATEGORY TOTAL	4804
CATEGORY 0040				
21+61		31+09	CTH CB SB RT	948
21+54		31+14	CTH CB NB LT	960
			SE QUAD CTH CB/NEUBERT RD	95
			NE QUAD CTH CB/NEUBERT RD	60
			NW QUAD CTH CB/NEUBERT RD	95
			SW QUAD CTH CB/NEUBERT RD	60
			CATEGORY TOTAL	2218
			PROJECT TOTAL	7022

CONSTRUCTION STAKING PIPE CULVERTS

STATION	LOCATION	650.6000 EACH
CATEGORY 0040		
1+96	NEUBERT ROAD	1
	PROJECT TOTAL	1

3

CONSTRUCTION STAKING CONCRETE PAVEMENT

STATION	TO	STATION	LOCATION	650.7000 LF
CATEGORY 0010				
167+18	-	170+07	STH 15 EB	289
166+00	-	172+46	STH 15 WB	646
175+59	-	187+75	STH 15 EB	1216
177+50	-	187+75	STH 15 WB	1025
			PROJECT TOTAL	3176

CONSTRUCTION STAKING SUPPLEMENTAL CONTROL (1146-39-71)

CATEGORY	LOCATION	650.9910 LS	REMARKS
0010	STH 15 & CTH CB ROUNDABOUT	1	PROJECT
	TOTAL	1	

CONSTRUCTION STAKING SLOPE STAKES

STATION	TO	STATION	LOCATION	650.9920 LF
CATEGORY 0010				
167+18	-	172+85	STH 15 EB	567
166+00	-	172+95	STH 15 WB	695
174+85	-	187+75	STH 15 EB	1290
174+70	-	187+75	STH 15 WB	1305
16+50	-	19+52	CTH CB NB	302
16+50	-	19+57	CTH CB SB	307
75+00	-	78+89	ROUNDABOUT	389
			CATEGORY TOTAL	4855
CATEGORY 0040				
21+61	-	33+75	CTH CB SB	1214
21+54	-	33+75	CTHCB NB	1221
0+25	-	2+50	NEUBERT RD	134
			CATEGORY TOTAL	2569
			CATEGORY TOTAL	7424

SAWING CONCRETE

STATION	LOCATION	690.0250 LF
CATEGORY 0010		
166+00 - 167+00	STH 15 WB	124
167+18	STH 15 EB	26
187+75	STH 15 WB	26
187+75	STH 15 EB	26
	PROJECT TOTAL	202

FILE NAME : Q\Misc Quantities\1146-39-00\misc_q_border.ppt PLOT DATE : _____ PLOT BY : Northeast Region PLOT NAME : _____ PLOT SCALE : 1:1

PAVEMENT MARKING GROOVED PREFORMED THERMOPLASTIC ARROWS TYPE 1

STATION	LOCATION	SPV.0060.09 EACH	REMARKS
CATEGORY 0010			
169+65	STH 15 EB	1	THRU LANE
170+80	STH 15 EB	1	THRU LANE
172+40	STH 15 EB	1	THRU LANE
175+58	STH 15 WB	2	THRU LANE
176+20	STH 15 WB	1	THRU LANE
75+80	STH 15/CTH CB	1	CIRCULATORY ROADWAY
77+75	STH 15/CTH CB	2	CIRCULATORY ROADWAY
78+80	STH 15/CTH CB	1	CIRCULATORY ROADWAY
	PROJECT TOTAL	10	

PAVEMENT MARKING GROOVED PREFORMED THERMOPLASTIC ARROWS TYPE 2

STATION	LOCATION	SPV.0060.10 EACH	REMARKS
CATEGORY 0010			
170+85	STH 15 EB	2	RT TURN LANES
172+25	STH 15 EB	2	RT TURN LANES
175+40	STH 15 WB	1	RT TURN LANE
176+40	STH 15 WB	1	RT TURN LANE
76+80	STH 15/CTH CB	1	CIRCULATORY ROADWAY
77+75	STH 15/CTH CB	1	CIRCULATORY ROADWAY
78+80	STH 15/CTH CB	1	CIRCULATORY ROADWAY
16+20	CTH CB NB	1	LT TURN
17+60	CTH CB NB	1	RT TURN
19+50	CTH CB NB	1	RT TURN
	PROJECT TOTAL	12	

PAVEMENT MARKING GROOVED PREFORMED THERMOPLASTIC ARROWS TYPE 2R

STATION	LOCATION	SPV.0060.11 EACH	REMARKS
CATEGORY 0010			
17+60	CTH CB NB	1	LT TURN
18+90	CTH CB NB	1	LT TURN
	CATEGORY TOTAL	2	
CATEGORY 0040			
22+40	CTH CB SB	1	LT TURN
	CATEGORY TOTAL	1	
	PROJECT TOTAL	3	

3

PAVEMENT MARKING GROOVED PREFORMED THERMOPLASTIC ARROWS TYPE 3

STATION	LOCATION	SPV.0060.12 EACH	REMARKS
CATEGORY 0010			
75+80	STH 15/CTH CB	1	CIRCULATORY ROADWAY
76+80	STH 15/CTH CB	1	CIRCULATORY ROADWAY
77+75	STH 15/CTH CB	1	CIRCULATORY ROADWAY
78+80	STH 15/CTH CB	1	CIRCULATORY ROADWAY
177+50	STH 15 WB	2	
17+60	CTH CB NB	1	
18+90	CTH CB NB	1	
	CATEGORY TOTAL	8	
CATEGORY 0040			
22+40	CTH CB SB	2	
	CATEGORY TOTAL	2	
	PROJECT TOTAL	10	

PAVEMENT MARKING GROOVED PREFORMED THERMOPLASTIC ARROWS TYPE 3R

STATION	LOCATION	SPV.0060.13 EACH
CATEGORY 0010		
169+65	STH 15 EB	1
170+80	STH 15 EB	1
172+55	STH 15 EB	1
175+58	STH 15 WB	1
176+20	STH 15 WB	1
	PROJECT TOTAL	5

PAVEMENT MARKING GROOVED PREFORMED THERMOPLASTIC WORDS WHITE

STATION	LOCATION	SPV.0060.14 EACH	REMARKS
CATEGORY 0010			
171+45	STH 15 EB RT	2	"ONLY"
172+50	STH 15 EB RT	3	"ONLY"
172+85	STH 15 EB RT	4	"YIELD"
174+70	STH 15 WB RT	4	"YIELD"
175+80	STH 15 WB RT	2	"ONLY"
176+00	STH 15 WB RT	1	"ONLY"
17+00	CTH CB NB	1	"ONLY"
18+68	CTH CB NB	1	"ONLY"
19+55	CTH CB NB	2	"YIELD"
	CATEGORY TOTAL	20	
CATEGORY 0040			
21+60	CTH CB SB	3	"YIELD"
21+60	CTH CB SB	1	"ONLY"
	CATEGORY TOTAL	4	
	PROJECT TOTAL	24	

PAVEMENT MARKING GROOVED PREFORMED THERMOPLASTIC YIELD LINE

LOCATION	SPV.0090.01 LF	REMARKS
CATEGORY 0010		
STH 15 EAST LEG	20	WB YIELD LINE
STH 15 WEST LEG	22	EB YIELD LINE
CTH CB NB SOUTH LEG	10	NB YIELD LINE
CATEGORY TOTAL	52	
CATEGORY 0040		
CTH CB SB NORTH LEG	14	SB YIELD LINE
CATEGORY TOTAL	14	
PROJECT TOTAL	66	

PAVEMENT MARKING GROOVED PREFORMED THERMOPLASTIC 8-INCH

STATION	TO	STATION	LOCATION	SPV.0090.02 LF	REMARKS
CATEGORY 0010					
75+00	-	76+75	STH 15/CTH CB	170	CIRCULATORY ROADWAY 6'
75+75	-	78+48	STH 15/CTH CB	125	CIRCULATORY ROADWAY 6'
76+87	-	78+50	STH 15/CTH CB	190	CIRCULATORY ROADWAY 6'
77+75	-	78+50	STH 15/CTH CB	114	CIRCULATORY ROADWAY 6'
75+00	-	78+89	STH 15/CTH CB	25	CIRCULATORY ROADWAY 1'
75+00	-	78+89	STH 15/CTH CB	52	CIRCULATORY ROADWAY 8"
172+65	-	172+86	STH 15/CTH CB	76	WEST LEG MEDIAN
174+59	-	174+80	STH 15/CTH CB	73	EAST LEG MEDIAN
19+52	-	19+77	STH 15/CTH CB	98	CTH CB SOUTH LEG
19+50			CTH CB NB	22	CTH CB SOUTH LEG MEDIAN
21+50			CTH CB NB	29	CTH CB NORTH LEG MEDIAN
			CATEGORY TOTAL	974	
CATEGORY 0040					
21+50	-	21+80	STH 15/CTH CB	105	CTH CB NORTH LEG
			CATEGORY TOTAL	105	
			PROJECT TOTAL	1079	

PAVEMENT MARKING GROOVED PREFORMED THERMOPLASTIC 12-INCH

STATION	TO	STATION	LOCATION	SPV.0090.03 LF	REMARKS
CATEGORY 0010					
170+75	-	171+38	STH 15 EB	32	RT TURN/SPLITTER ISLAND GORE
172+00	-	172+90	STH 15 EB	24	THRU/LT GORE
174+70	-	176+14	STH 15 WB	46	THRU/LT GORE
175+95	-	176+25	STH 15 WB	20	RT TURN/SPLITTER ISLAND GORE
18+50	-	18+75	CTH CB NB	17	RT TURN/SPLITTER ISLAND GORE
			PROJECT TOTAL	139	

CONDUIT RIGID NONMETALLIC SCHEDULE 40

LOCATION	FROM		TO	* 652.0225 2-Inch LF	652.0235 3-Inch LF
CATEGORY 0010					
STH 15 & CTH CB	CB1	-	PB1		10
STH 15 & CTH CB	CB1	-	PB1		10
STH 15 & CTH CB	PB1	-	LB1	10	
STH 15 & CTH CB	PB1	-	PB2		90
STH 15 & CTH CB	PB2	-	LB2	20	
STH 15 & CTH CB	PB2	-	LB3	110	
STH 15 & CTH CB	LB3	-	LB4	140	
STH 15 & CTH CB	PB2	-	PB3		60
STH 15 & CTH CB	PB3	-	LB5	30	
STH 15 & CTH CB	PB3	-	PB4		130
STH 15 & CTH CB	PB5	-	LB7	30	
STH 15 & CTH CB	LB7	-	PB6	60	
STH 15 & CTH CB	PB6	-	LB8	110	
STH 15 & CTH CB	PB6	-	PB7		100
STH 15 & CTH CB	PB7	-	LB9	20	
STH 15 & CTH CB	PB7	-	LB10	180	
STH 15 & CTH CB	LB10	-	LB11	160	
STH 15 & CTH CB	LB11	-	LB12	140	
STH 15 & CTH CB	LB12	-	LB13	140	
STH 15 & CTH CB	PB7	-	PB8		80
STH 15 & CTH CB	PB8	-	LB14	10	
STH 15 & CTH CB	PB8	-	PB9		80
STH 15 & CTH CB	PB9	-	LB15	50	
STH 15 & CTH CB	PB9	-	PB10		90
STH 15 & CTH CB	PB10	-	LB16	20	
STH 15 & CTH CB	PB10	-	PB11		70
STH 15 & CTH CB	PB11	-	LB17	10	
STH 15 & CTH CB	PB11	-	PB1		110
			CATEGORY TOTAL	1,240	830
CATEGORY 0040					
STH 15 & CTH CB	PB4	-	LB6	10	
STH 15 & CTH CB	PB4	-	PB5		130
			CATEGORY TOTAL	10	130
			PROJECT TOTAL	1,250	960

* ADDITIONAL QUANTITIES SHOWN ELSEWHERE

PAVEMENT MARKING GROOVED PREFORMED THERMOPLASTIC CROSSWALK

STATION	LOCATION	SPV.0090.04 LF	REMARKS
CATEGORY 0020			
172+47	STH 15 WB	36	
172+57	STH 15 WB	36	
172+65	STH 15 EB	30	LT/THRU LANES
172+65	STH 15 EB	30	LT/THRU LANES
172+75	STH 15 EB	24	RT TURN LANES
172+75	STH 15 EB	24	RT TURN LANES
	CATEGORY TOTAL	180	
CATEGORY 0040			
21+74	CTH CB SB	36	
21+74	CTH CB SB	36	
21+81	CTH CB NB	26	
21+81	CTH CB NB	24	
	CATEGORY TOTAL	122	
	CATEGORY TOTAL	302	

PULL BOXES STEEL

LOCATION	653.0140 24x42-Inch EACH
CATEGORY 0010	
STH 15 & CTH CB	10
CATEGORY TOTAL	10
CATEGORY 0040	
CTH CB SB	1
CATEGORY TOTAL	1
PROJECT TOTAL	11

CONCRETE BASES

LOCATION	654.0105 Type 5 EACH	654.0215 Control Cabinet Type 9 EACH
CATEGORY 0010		
STH 15 & CTH CB	16	1
CATEGORY TOTAL	16	1
CATEGORY 0040		
CTH CB SB	1	0
CATEGORY TOTAL	1	0
PROJECT TOTAL	17	1

REMOVING PULL BOXES

LOCATION	653.0905 EACH
CATEGORY 0010	
STH 15 & CTH CB	20
PROJECT TOTALS	20

REMOVING CONCRETE BASES

LOCATION	204.0195 EACH
CATEGORY 0010	
STH 15 & CTH CB	13
PROJECT TOTAL	13

ELECTRICAL WIRE LIGHTING

LOCATION STH 15 & CTH CB (240 VOLT SYSTEM)			10AWG		12AWG	
CIRCUIT	FROM	TO	655.0615 UNGROUNDED CONDUCTOR (BLACK/RED) LF	655.0615 EQUIPMENT GROUNDING CONDUCTOR (GREEN) LF	655.0610 UNGROUNDED CONDUCTOR (BLACK/RED) LF	655.0610 EQUIPMENT GROUNDING CONDUCTOR (GREEN) LF
CATEGORY 0010						
A	CB1	LB1	80	40		
	LB1	LUMINAIRE			100	50
	CB1	PB1		30		
	LB1	LB17	340	170		
	LB17	LUMINAIRE			100	50
	LB17	PB11		30		
	LB17	LB16	280	140		
	LB16	LUMINAIRE			100	50
	LB16	LUMINAIRE			100	50
	LB16	PB10		40		
B	CB1	LB2	320	160		
	LB2	LUMINAIRE			100	50
	LB2	PB2		40		
	LB2	LB3	320	160		
	LB3	LUMINAIRE			100	50
	LB3	LUMINAIRE			100	50
	LB3	LB4	320	160		
	LB4	LUMINAIRE			100	50
	LB4	LUMINAIRE			100	50
C	CB1	LB5	480	240		
	LB5	LUMINAIRE			100	50
	LB5	PB3		50		
	LB5	LB6	420	210		

ELECTRICAL WIRE LIGHTING CONTINUED

LOCATION STH 15 & CTH CB (240 VOLT SYSTEM)			10AWG		12AWG	
CIRCUIT	FROM	TO	655.0615 UNGROUNDED CONDUCTOR (BLACK/RED) LF	655.0615 EQUIPMENT GROUNDING CONDUCTOR (GREEN) LF	655.0610 UNGROUNDED CONDUCTOR (BLACK/RED) LF	655.0610 EQUIPMENT GROUNDING CONDUCTOR (GREEN) LF
D	CB1	LB7	1040	520		
	LB7	LUMINAIRE			100	50
	LB7	PB5		50		
	LB7	PB6		80		
	LB7	LB8	400	200		
	LB8	LUMINAIRE			100	50
E	CB1	LB10	1400	700		
	LB10	LUMINAIRE			100	50
	LB10	LB11	360	180		
	LB11	LUMINAIRE			100	50
	LB11	LB12	320	160		
	LB12	LUMINAIRE			100	50
	LB12	LB13	320	160		
	LB13	LUMINAIRE			100	50
F	CB1	LB15	780	390		
	LB15	LUMINAIRE			100	50
	LB15	PB9		70		
	LB15	LB14	360	180		
	LB14	LUMINAIRE			100	50
	LB14	PB8		30		
	LB14	LB9	300	150		
	LB9	LUMINAIRE			100	50
	LB9	PB7		40		
		CATEGORY SUB-TOTAL	7,840	4,380	1,900	950
CATEGORY 0040						
C	LB6	LUMINAIRE			100	50
	LB6	PB4		30		
		CATEGORY SUB-TOTAL	0	30	100	50
		PROJECT SUB-TOTAL	7,840	4,410	2,000	1,000
		PROJECT TOTAL	12,250		3,000	

LIGHTING SUMMARY

LOCATION	656.0200 ELECTRICAL SERVICE METER BREAKER PEDESTAL (STH 15 & CTH CB) LS	657.0255 TRANSFORMER BASES STANDARD 11 1/2-INCH BOLT CIRCLE EACH	657.0322 POLES TYPE 5 (ALUMINUM) EACH	657.0710 LUMINAIRE ARMS TRUSS TYPE 4 1/2-INCH CLAMP 12-FT EACH	659.0115 LUMINAIRES UTILITY HPS 150 WATTS EACH	659.0125 LUMINAIRES UTILITY HPS 250 WATTS EACH
CATEGORY 0010						
STH 15 & CTH CB	1	16	16	19	2	17
CATEGORY TOTALS	1	16	16	19	2	17
CATEGORY 0040						
CTH CB SB	0	1	1	1	0	1
CATEGORY TOTALS	0	1	1	1	0	1
PROJECT TOTAL	1	17	17	20	2	18

REMOVE TRAFFIC SIGNAL

LOCATION	SPV.0105.02 LS
CATEGORY 0010	
STH 15 & CTH CB	1
PROJECT TOTAL	1

CENTRAL ISLAND ELECTRICAL

LOCATION	FROM		TO	652.0125 CONDUIT RIGID METALLIC 2-INCH LF	653.0105 PULL BOXES STEEL 12X24-INCH EACH	*652.0225 CONDUIT RIGID NONMETALLIC SCHEDULE 40 2-INCH LF	655.0320 CABLE TYPE UF 2-10 AWG GROUNDED LF	SPV.0060.15 LANDSCAPE RECEPTACLE EACH	SPV.0060.16 METER BREAKER PEDESTAL SPECIAL EACH
CATEGORY 0030									
SW QUAD TO CENTRAL ISLAND	PED	-	OUT	10	1	153	163	1	1
PROJECT TOTAL				10	1	153	163	1	1

* ADDITIONAL QUANTITIES SHOWN ELSEWHERE

TREE / SHRUB SUMMARY

COMMON NAME	632.0101.01 EACH	632.0101.02 EACH	632.0201.01 EACH	632.0201.02 EACH	REMARKS
CATEGORY 0030					
DWARF SARGENT TINA CRABAPPLE	3				CENTRAL ISLAND OF ROUNDABOUT
IOWA JUNIPER		3			CENTRAL ISLAND OF ROUNDABOUT
MISS KIM LILAC			9		CENTRAL ISLAND OF ROUNDABOUT
ROSA NEARLY WILD				3	CENTRAL ISLAND OF ROUNDABOUT
PROJECT TOTAL	3	3	9	3	

LANDSCAPE PLANTING SURVEILLANCE AND CARE CYCLES

LOCATION	632.9101 EACH
CATEGORY 0030	
CENTRAL ISLAND OF ROUNDABOUT	9
PROJECT TOTAL	9

PLANTING SUMMARY

LOCATION	SPV.0060.02 GRASS INDIAN EACH	SPV.0060.03 FIREWORKS GOLDEN ROD EACH	SPV.0060.04 YELLOW DAY LILY EACH	SPV.0060.05 LITTLE BLUESTEM EACH	SPV.0060.06 GREYHANDED CONEFLOWER EACH	SPV.0060.07 PALE PURPLE CONEFLOWER EACH	SPV.0060.08 COREOPSIS GOLDEN SHOWERS EACH
CATEGORY 0030							
CENTRAL ISLAND	3	30	15	9	30	15	30
PROJECT TOTAL	3	30	15	9	30	15	30

ROUNDABOUT LANDSCAPING

STATION	LOCATION	SPV.0090.05 ALUMINUM EDGING LF	SPV.0180.01 SHREDDED HARDWOOD BULK MULCH SY	SPV.0180.02 DECOMPOSED (ROTTEN) GRANITE STONE MULCH SY	REMARKS
CATEGORY 0030					
172+47	STH 15 WB	207	310	346	SEE PLANTING DETAIL
	PROJECT TOTAL	207	310	346	

CONCRETE ROUNDABOUT TRUCK APRON 12-INCH

STATION	TO	STATION	LOCATION	416.0512 SY	* 405.0100 CY
CATEGORY 0010					
75+00	-	78+89.01	STH 15 / CTH CB IC	460	154
			PROJECT TOTAL	460	154

* ADDITIONAL QUANTITIES SHOWN ELSEWHERE

TRANSPORTATION PROJECT PLAT NO: 1146-39-21 - 4.01

BEING PART OF LOT 1 OF CSM NO. 3132 LOCATED WITHIN THE NORTHEAST QUARTER OF THE NORTHWEST QUARTER, ALSO PART OF THE NORTHWEST QUARTER OF THE NORTHEAST QUARTER, SECTION 24, T21N-R16E, TOWN OF GREENVILLE, OUTAGAMIE COUNTY, WISCONSIN.

RELOCATION ORDER STH 15 OUTAGAMIE COUNTY

TO PROPERLY ESTABLISH, LAY OUT, WIDEN, ENLARGE, EXTEND, CONSTRUCT, RECONSTRUCT, IMPROVE, OR MAINTAIN A PORTION OF THE HIGHWAY DESIGNATED ABOVE, THE STATE OF WISCONSIN DEPARTMENT OF TRANSPORTATION DEEMS IT NECESSARY TO RELOCATE OR CHANGE SAID HIGHWAY AND ACQUIRE CERTAIN LANDS AND INTERESTS OR RIGHTS IN LANDS FOR THE ABOVE PROJECT.

TO EFFECT THIS CHANGE, PURSUANT TO AUTHORITY GRANTED UNDER SECTION 84.02 (3) AND 84.09, WISCONSIN STATUTES, THE DEPARTMENT OF TRANSPORTATION HEREBY ORDERS THAT:
1. THAT PORTION OF SAID HIGHWAY AS SHOWN ON THIS PLAT IS LAID OUT AND ESTABLISHED TO THE LINES AND WIDTHS AS SO SHOWN FOR THE ABOVE PROJECT.
2. THE LANDS OR INTERESTS OR RIGHTS IN LANDS AS SHOWN ON THIS PLAT ARE REQUIRED BY THE DEPARTMENT FOR THE ABOVE PROJECT AND SHALL BE ACQUIRED IN THE NAME OF THE STATE OF WISCONSIN, PURSUANT TO THE PROVISIONS OF SECTION 84.09 (1) OR (2), WISCONSIN STATUTES.

CONVENTIONAL ABBREVIATIONS AND SYMBOLS

ACRES	AC	SECTION CORNER	
CHORD BEARING	CH BRG	SET R/W MONUMENT W/CAP (1-1/4" OUTSIDE DIA.x18" IRON PIPE 1.13 LBS/FT)	
CHORD DISTANCE	CH DIS	SET P.K. NAIL	
DEED	(D)	CORPORATE LIMITS	
DOCUMENT	DOC	EXISTING R/W	
EAST BOUND	EB	SECTION LINE	
GAS VALVE	GV	QUARTER LINE	
INLET	IL	SIXTEENTH LINE	
MANHOLE	MH	PROPOSED OR NEW R/W LINE	
MONUMENT	MON	PROPOSED EASEMENT LINE	
NORTH BOUND	NB	PROPERTY LINE	
PAGE	PG	LOT, TIE AND OTHER MINOR DASHED LINES	
PERMANENT LIMITED EASEMENT	PLE	COMMUNICATION LINE	C
PRIVATE DRIVEWAY	PD	BURIED GAS LINE	G
PROPERTY LINE	PL	OVERHEAD ELECTRIC LINE	OH
RADIUS	RAD	BURIED ELECTRIC LINE	E
REFERENCE LINE	℄	NO ACCESS (By Acquisition)	
REMAINING	REM	NO ACCESS (By Statutory Authority)	
RIGHT OF WAY	R/W	ACCESS RESTRICTED (By Previous Project/Control)	
SECTION	SEC	LIMITED EASEMENT (Temporary or Permanent)	
SECTION LINE	℄	PARCEL NUMBER	00
FOUND IRON PIPE	IP●	UTILITY PARCEL NUMBER	000-00
STATION	STA		
TEMPORARY LIMITED EASEMENT	TLE		
TIE POINT	DB1		
VOLUME	VOL		
ADJOINING LANDS WITH SAME OWNER			
BUILDING TO BE RAZED			
FEE ACQUISITION	VARIOUS HATCHING		
PROPOSED R/W BOUNDARY POINT	PRW000		

	COMPENSABLE	NON-COMPENSABLE
POWER POLE	●	⊕
TELEPHONE POLE	■	□
SIGN	▶	▷
TELEPHONE PEDESTAL	✖	✕

SECTION 24 T21N - R16E
TOWN OF GREENVILLE

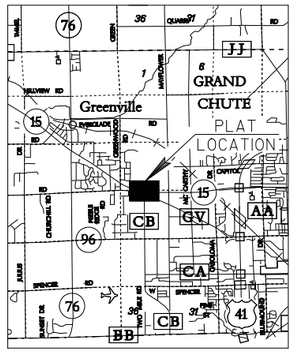

LOCATION SKETCH
(NOT TO SCALE)

The most current Right of Way information should be viewed in DTD View using the Real Estate Project ID. The Plat information contained in this AsBuilt Plan may not be the final records.

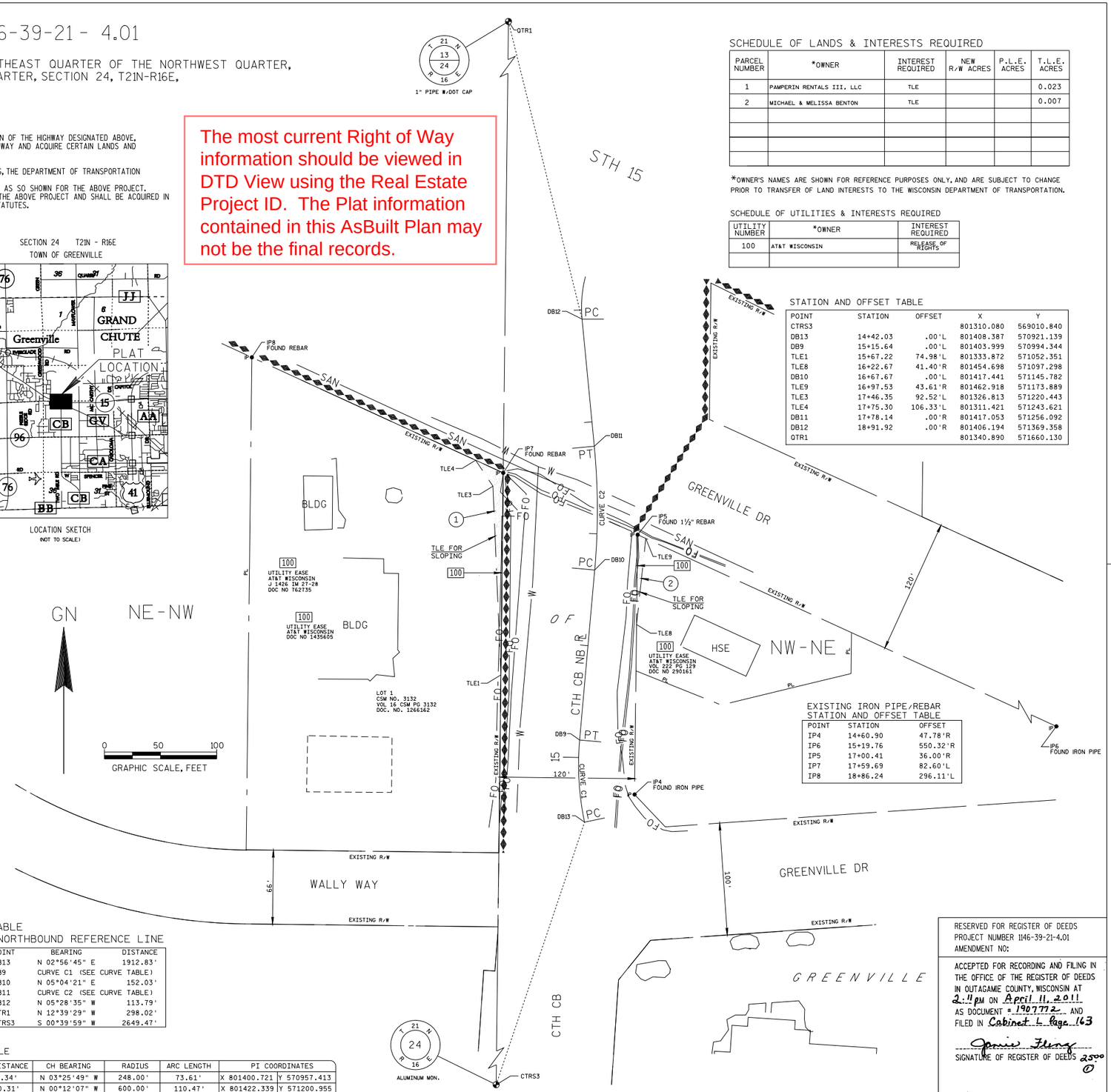

SCHEDULE OF LANDS & INTERESTS REQUIRED

PARCEL NUMBER	*OWNER	INTEREST REQUIRED	NEW R/W ACRES	P.L.E. ACRES	T.L.E. ACRES
1	PAMPERIN RENTALS III, LLC	TLE			0.023
2	MICHAEL & MELISSA BENTON	TLE			0.007

*OWNER'S NAMES ARE SHOWN FOR REFERENCE PURPOSES ONLY, AND ARE SUBJECT TO CHANGE PRIOR TO TRANSFER OF LAND INTERESTS TO THE WISCONSIN DEPARTMENT OF TRANSPORTATION.

SCHEDULE OF UTILITIES & INTERESTS REQUIRED

UTILITY NUMBER	*OWNER	INTEREST REQUIRED
100	AT&T WISCONSIN	RELEASE OF RIGHTS

STATION AND OFFSET TABLE

POINT	STATION	OFFSET	X	Y
CTRS3			801310.080	569010.840
DB13	14+42.03	.00'L	801408.387	570921.139
DB9	15+15.64	.00'L	801403.999	570994.344
TLE1	15+67.22	74.98'L	801333.872	571052.351
TLE8	16+22.67	41.40'R	801454.698	571097.298
DB10	16+67.67	.00'L	801417.441	571145.782
TLE9	16+97.53	43.61'R	801462.918	571173.889
TLE3	17+46.35	92.52'L	801326.813	571220.443
TLE4	17+75.30	106.33'L	801311.421	571243.621
DB11	17+78.14	.00'R	801417.053	571256.092
DB12	18+91.92	.00'R	801406.194	571369.358
QTR1			801340.890	571660.130

EXISTING IRON PIPE/REBAR STATION AND OFFSET TABLE

POINT	STATION	OFFSET
IP4	14+60.90	47.78'R
IP6	15+19.76	550.32'R
IP5	17+00.41	36.00'R
IP7	17+59.69	82.60'L
IP8	18+86.24	296.11'L

COURSE TABLE
CTH CB NORTHBOUND REFERENCE LINE

POINT TO POINT		BEARING	DISTANCE
CTRS3	DB13	N 02°56'45" E	1912.83'
DB13	DB9	CURVE C1 (SEE CURVE TABLE)	
DB9	DB10	N 05°04'21" E	152.03'
DB10	DB11	CURVE C2 (SEE CURVE TABLE)	
DB11	DB12	N 05°28'35" W	113.79'
DB12	QTR1	N 12°39'29" W	298.02'
QTR1	CTRS3	S 00°39'59" W	2649.47'

CURVE TABLE

CURVE	CH DISTANCE	CH BEARING	RADIUS	ARC LENGTH	PI COORDINATES
C1	73.34'	N 03°25'49" W	248.00'	73.61'	X 801400.721 Y 570957.413
C2	110.31'	N 00°12'07" W	600.00'	110.47'	X 801422.339 Y 571200.955

RESERVE FOR CLAUSES AND NOTE INFORMATION

COORDINATES AND BEARINGS ON THIS PLAT ARE ORIENTED TO THE OUTAGAMIE COUNTY COORDINATE SYSTEM, (ENGLISH), NAD 1983 (1991) ADJUSTMENT. ALL PLAT DISTANCES ARE GROUND LENGTHS.

RIGHT OF WAY BOUNDARIES ARE DEFINED WITH COURSES OF THE PERIMETER OF THE HIGHWAY LANDS AND ARE REFERENCED TO THE US PUBLIC LAND SURVEY OR OTHER SURVEYS OF PUBLIC RECORD.

DIMENSIONING FOR THE NEW RIGHT-OF-WAY IS MEASURED ALONG AND PERPENDICULAR TO NEW REFERENCE LINES.

PROPERTY LINES SHOWN ON THIS PLAT ARE DRAWN FROM DATA DERIVED FROM MAPS AND DOCUMENTS OF PUBLIC RECORD AND/OR EXISTING OCCUPATIONAL LINES. THIS PLAT MAY NOT BE A TRUE REPRESENTATION OF EXISTING PROPERTY LINES AND SHOULD NOT BE USED AS A SUBSTITUTE FOR AN ACCURATE FIELD SURVEY.

RIGHT-OF-WAY MONUMENTS ARE TYPE 2 AND WILL BE PLACED PRIOR TO THE COMPLETION OF THE PROJECT.

EXISTING ACCESS CONTROL WAS ACQUIRED UNDER PROJECT(S): 1146-07-21.

EXISTING RIGHT OF WAY WAS ESTABLISHED UNDER PROJECT(S): 1146-07-21, F 010-2(5)

THE REFERENCE LINE SHOWN ON THIS PLAT MAY NOT BE THE SAME AS THE REFERENCE LINE SHOWN ON THE CONSTRUCTION PLAN

A TEMPORARY LIMITED EASEMENT (TLE) IS A RIGHT FOR CONSTRUCTION PURPOSES, AS DEFINED HEREIN, INCLUDING THE RIGHT TO OPERATE NECESSARY EQUIPMENT THEREON AND THE RIGHT OF INGRESS AND EGRESS AS LONG AS REQUIRED FOR SUCH PUBLIC PURPOSE, INCLUDING THE RIGHT TO PRESERVE, PROTECT, REMOVE OR PLANT THEREON ANY VEGETATION THAT THE HIGHWAY AUTHORITIES MAY DEEM NECESSARY OR DESIRABLE TO PREVENT EROSION OF THE SOIL. ALL TLE'S EXPIRE AT THE COMPLETION OF THE CONSTRUCTION PROJECT FOR WHICH THIS INSTRUMENT IS GIVEN.

I HEREBY CERTIFY THAT THIS PLAT MEETS ALL REQUIREMENTS OF SECTION 84.095, WISCONSIN STATUTES. THIS PLAT WAS PREPARED BY OR UNDER THE DIRECTION OF

JEFFREY T. BOHRTZ, RLS-2223 — PRINTED NAME
Jeffrey T. Bohrtz — SIGNATURE
4/7/2011 — DATE

THIS PLAT AND RELOCATION ORDER ARE APPROVED FOR THE WISCONSIN DEPARTMENT OF TRANSPORTATION

NORMAN PAWELCZYK — PRINTED NAME
Norman W. Pawelczyk — SIGNATURE
4/7/2011 — DATE

RESERVED FOR REGISTER OF DEEDS
PROJECT NUMBER 1146-39-21-4.01
AMENDMENT NO:

ACCEPTED FOR RECORDING AND FILING IN THE OFFICE OF THE REGISTER OF DEEDS IN OUTAGAMIE COUNTY, WISCONSIN AT 2:11 PM ON April 11, 2011 AS DOCUMENT # 1907772 AND FILED IN Cabinet L Page 163

Jamie Fleming
SIGNATURE OF REGISTER OF DEEDS 25.00

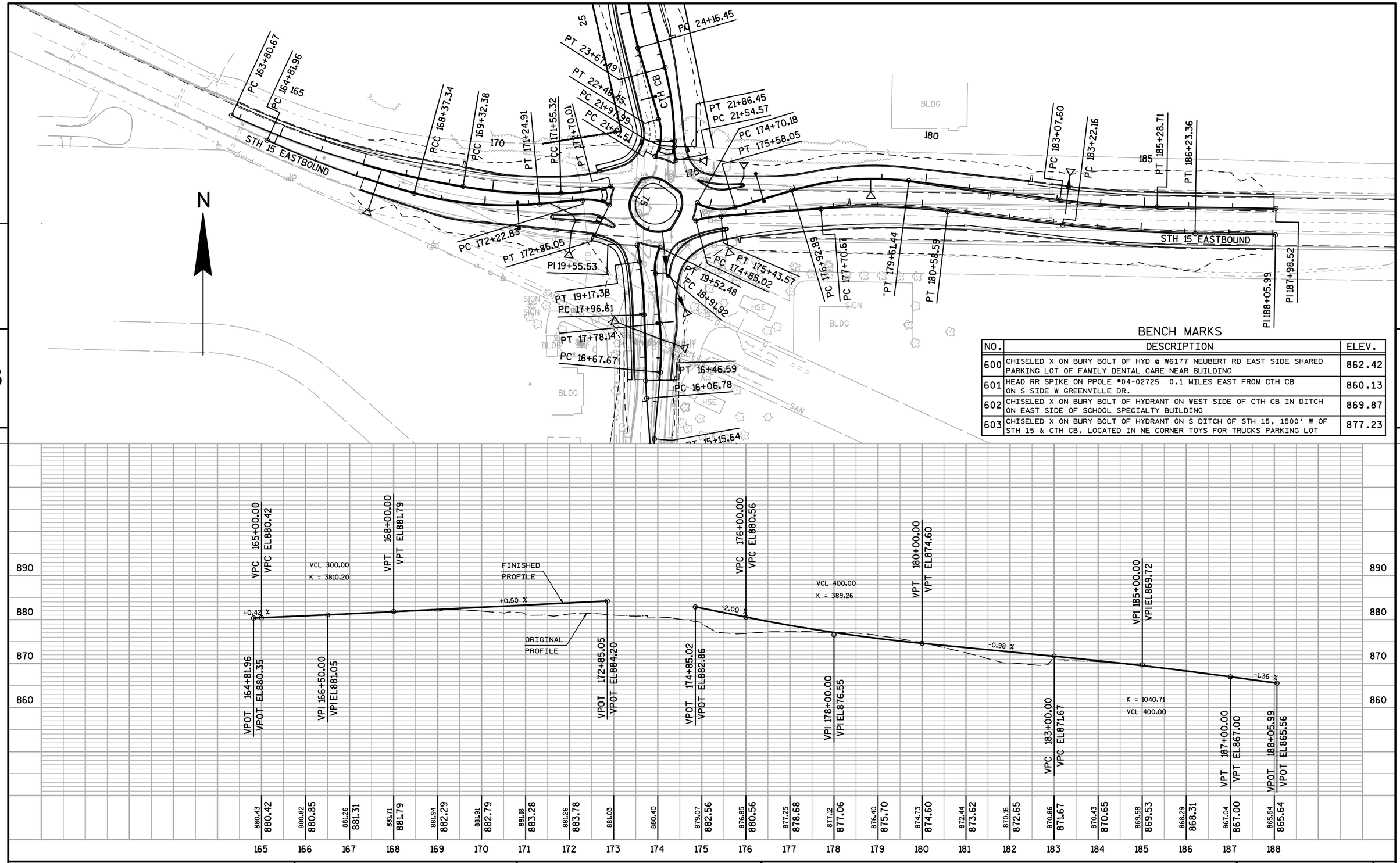

BENCH MARKS

NO.	DESCRIPTION	ELEV.
600	CHISELED X ON BURY BOLT OF HYD @ W6177 NEUBERT RD EAST SIDE SHARED PARKING LOT OF FAMILY DENTAL CARE NEAR BUILDING	862.42
601	HEAD RR SPIKE ON PPOLE *04-02725 0.1 MILES EAST FROM CTH CB ON S SIDE W GREENVILLE DR.	860.13
602	CHISELED X ON BURY BOLT OF HYDRANT ON WEST SIDE OF CTH CB IN DITCH ON EAST SIDE OF SCHOOL SPECIALTY BUILDING	869.87
603	CHISELED X ON BURY BOLT OF HYDRANT ON S DITCH OF STH 15, 1500' W OF STH 15 & CTH CB. LOCATED IN NE CORNER TOYS FOR TRUCKS PARKING LOT	877.23

PROJECT NO: 1146-39-71	HWY: STH 15	COUNTY: OUTAGAMIE	PLAN & PROFILE (STH 15 EASTBOUND)	SHEET E

FILE NAME : F:\d3_114639\050101_pp.DGN PLOT DATE : 27-JUL-2011 13:26 PLOT BY : dotmzc PLOT NAME : 050101pp PLOT SCALE : 200.000000:1.000000

WISDOT/CADDS SHEET 40

PROJECT NO: 1146-39-71	HWY: STH 15	COUNTY: OUTAGAMIE	PLAN & PROFILE (STH 15 WESTBOUND)	SHEET E

FILE NAME : F:\d3_114639\050102_pp.dgn PLOT DATE : 27-JUL-2011 13:26 PLOT BY : dotmzc PLOT NAME : 050102 pp PLOT SCALE : 200.000000:1.000000

WISDOT/CADDS SHEET 40

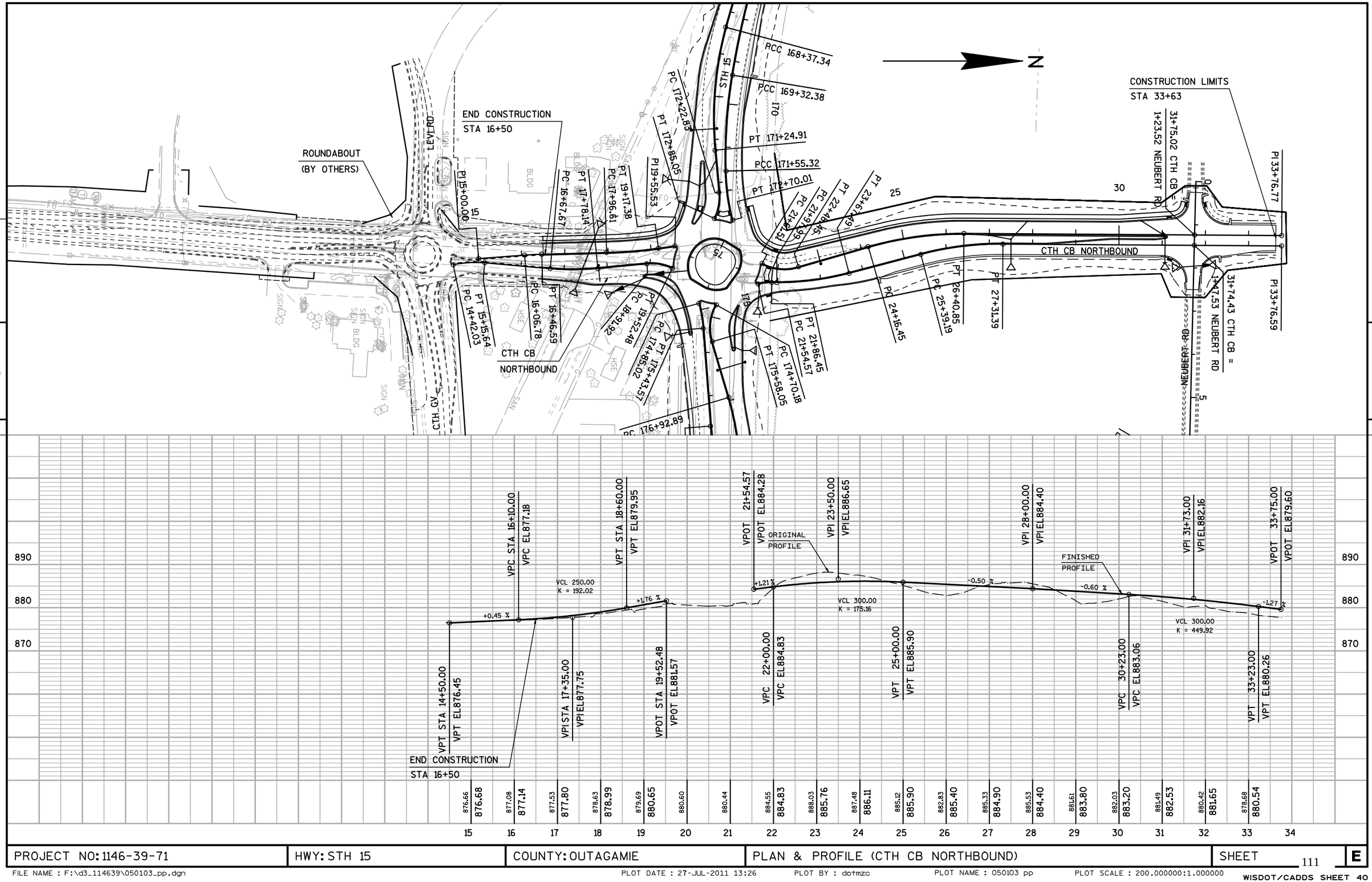

PROJECT NO: 1146-39-71	HWY: STH 15	COUNTY: OUTAGAMIE	PLAN & PROFILE (CTH CB NORTHBOUND)	SHEET 111 E

FILE NAME : F:\d3_114639\050103_pp.dgn PLOT DATE : 27-JUL-2011 13:26 PLOT BY : dotmzc PLOT NAME : 050103 pp PLOT SCALE : 200.000000:1.000000

WISDOT/CADDS SHEET 40

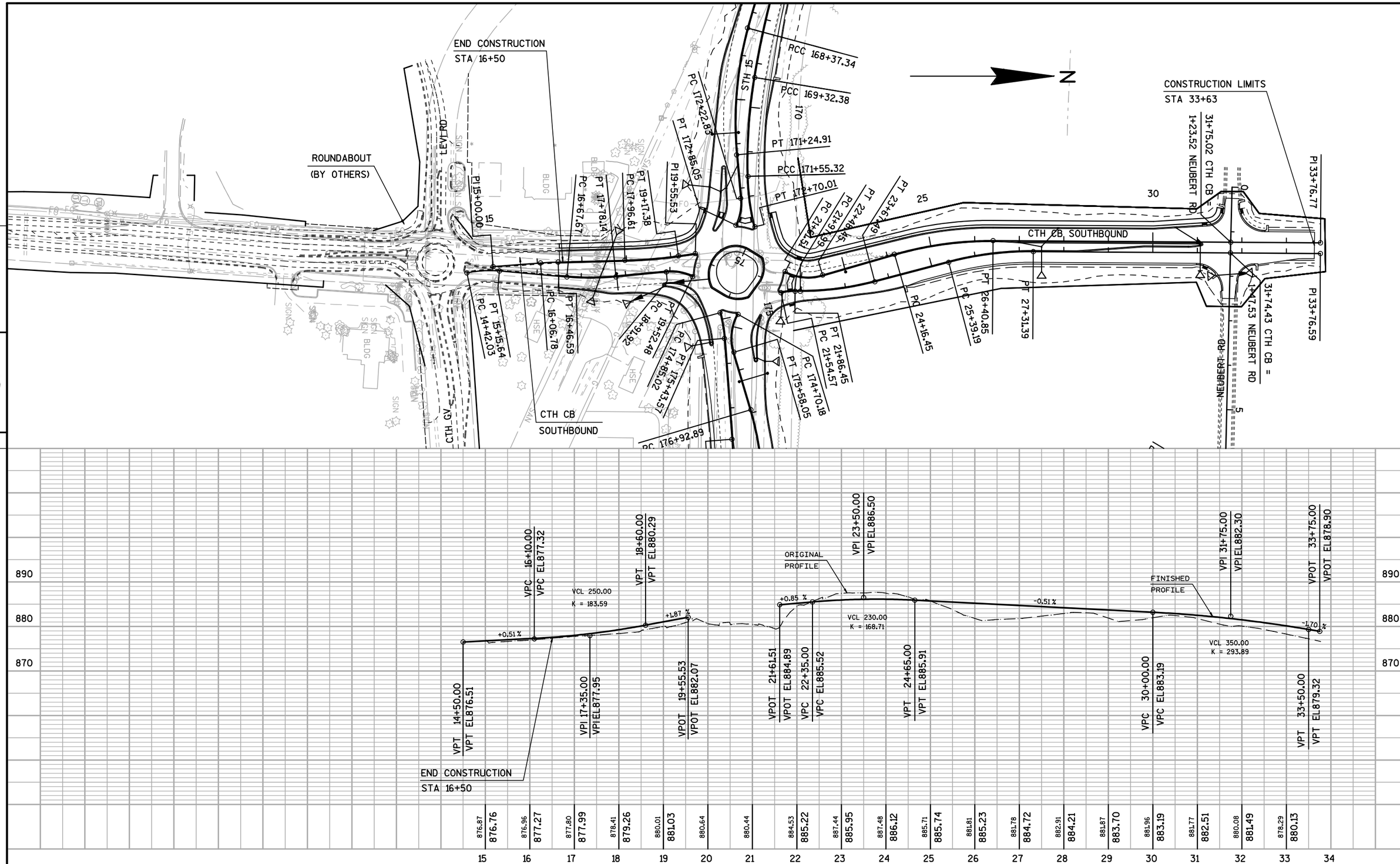

PROJECT NO:1146-39-71	HWY:STH 15	COUNTY:OUTAGAMIE	PLAN & PROFILE (CTH CB SOUTHBOUND)	SHEET 112	E

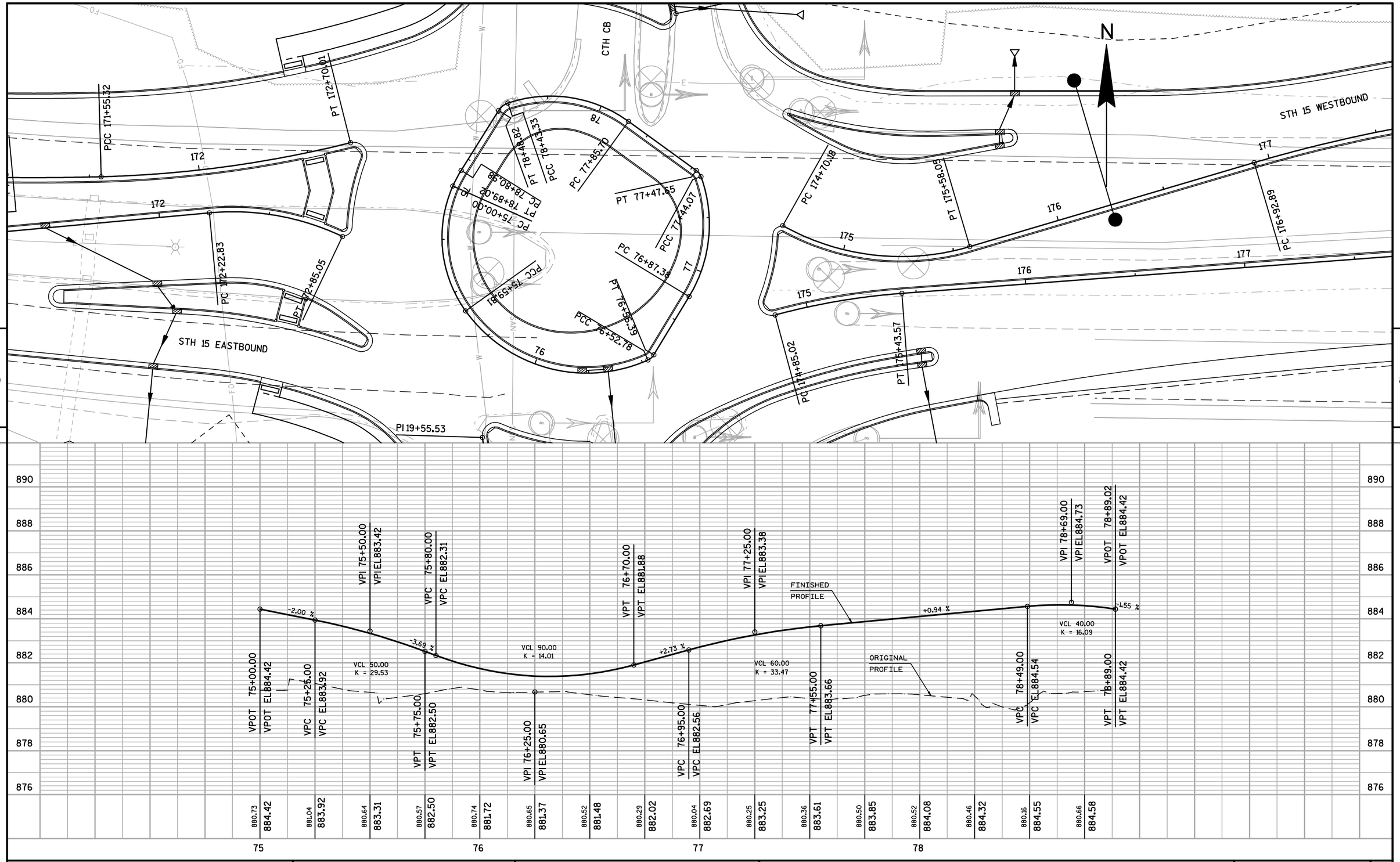

PROJECT NO: 1146-39-71	HWY: STH 15	COUNTY: OUTAGAMIE	PLAN & PROFILE (CIRCULATORY)	SHEET E

FILE NAME : F:\d3_114639\050105_pp.dgn PLOT DATE : 27-JUL-2011 13:26 PLOT BY : dotmzc PLOT NAME : 050105 pp PLOT SCALE : 40.000000:1.000000

WISDOT/CADDS SHEET 30

CP1
CURVE NOTES

PI = 100+53.73
Y = 571,476.462
X = 801,312.665
∠ = 110°-11'-05"
Δ = 69°-48'-55"
D = 74°-24'-36"
T = 53.73'
L = 93.83'
R = 77.00'

CP2
CURVE NOTES

PI = 101+28.69
Y = 571,441.390
X = 801,394.025
∠ = 156°-21'-01"
Δ = 23°-38'-59"
D = 63°-39'-43"
T = 18.84'
L = 37.15'
R = 90.00'

CP5
CURVE NOTES

PI = 103+47.88
Y = 571,596.231
X = 801,464.768
∠ = 149°-17'-44"
Δ = 30°-42'-16"
D = 59°-04'-04"
T = 26.63'
L = 51.98'
R = 97.00'

CP6
CURVE NOTES

PI = 103+92.15
Y = 571,618.738
X = 801,425.162
∠ = 156°-59'-50"
Δ = 23°-00'-10"
D = 61°-36'-30"
T = 18.92'
L = 37.34'
R = 93.00'

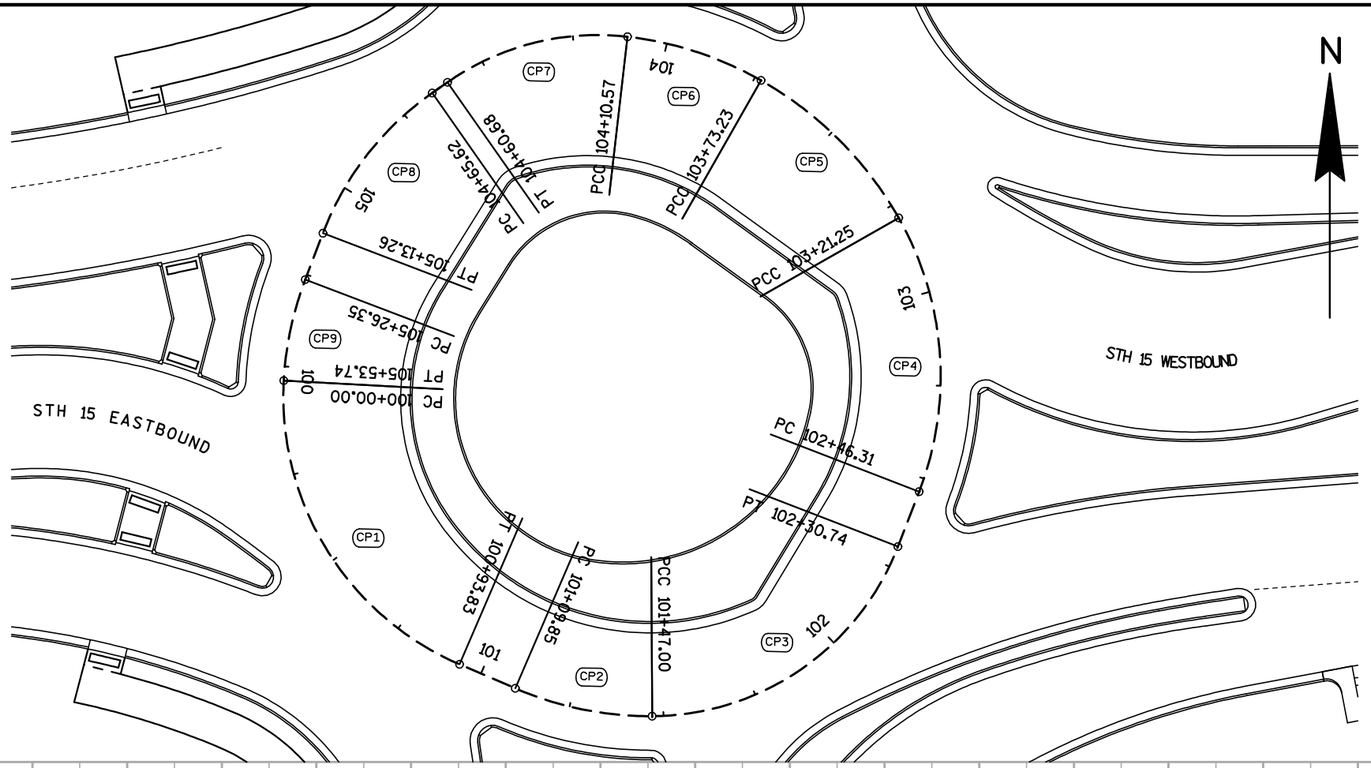

CP3
CURVE NOTES

PI = 101+94.70
Y = 571,441.773
X = 801,460.568
∠ = 111°-27'-19"
Δ = 68°-32'-41"
D = 81°-51'-04"
T = 47.70'
L = 83.74'
R = 70.00'

CP4
CURVE NOTES

PI = 102+86.44
Y = 571,538.229
X = 801,497.836
∠ = 129°-11'-11"
Δ = 50°-48'-49"
D = 67°-48'-20"
T = 40.14'
L = 74.94'
R = 84.50'

CP7
CURVE NOTES

PI = 104+36.79
Y = 571,623.930
X = 801,380.318
∠ = 138°-23'-12"
Δ = 41°-36'-48"
D = 83°-02'-15"
T = 26.22'
L = 50.11'
R = 69.00'

CP8
CURVE NOTES

PI = 104+90.17
Y = 571,591.970
X = 801,334.688
∠ = 145°-52'-54"
Δ = 34°-07'-06"
D = 71°-37'-11"
T = 24.55'
L = 47.64'
R = 80.00'

CP9
CURVE NOTES

PI = 105+40.16
Y = 571,543.902
X = 801,316.359
∠ = 162°-15'-44"
Δ = 17°-44'-16"
D = 64°-44'-28"
T = 13.81'
L = 27.40'
R = 88.50'

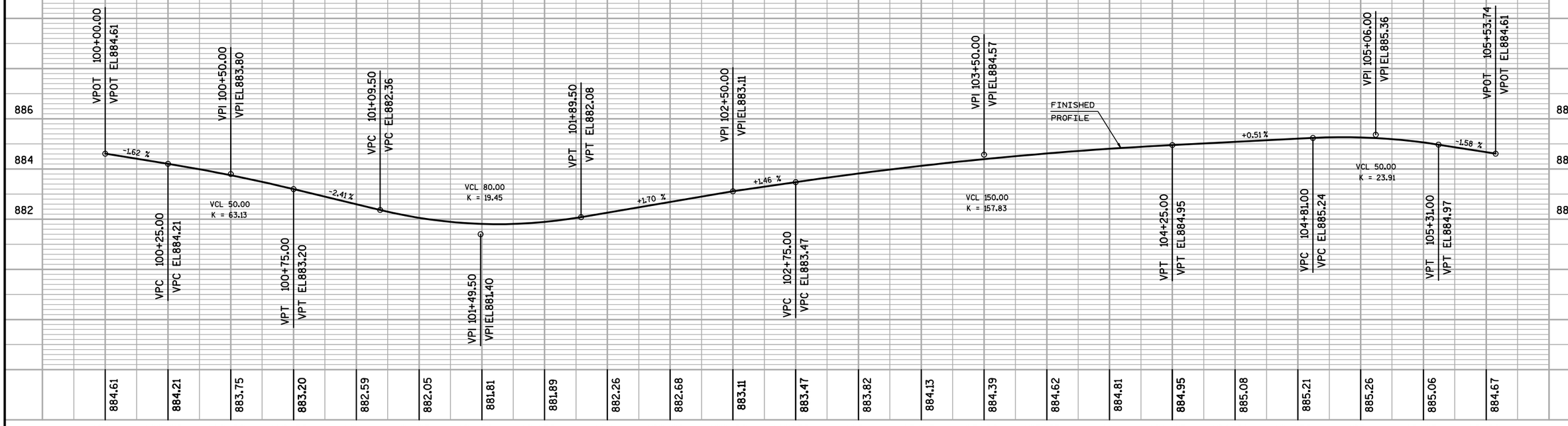

PROJECT NO: 1146-39-71	HWY: STH 115	COUNTY: OUTAGAMIE	PLAN & PROFILE (CIRCULATORY CROWN POINT)	SHEET	E

FILE NAME : F:\d3_114639\050116_pp.DGN PLOT DATE : 27-JUL-2011 13:26 PLOT BY : dotmzc PLOT NAME : 050116 pp PLOT SCALE : 40.000000:1.000000

WISDOT/CADDS SHEET 30

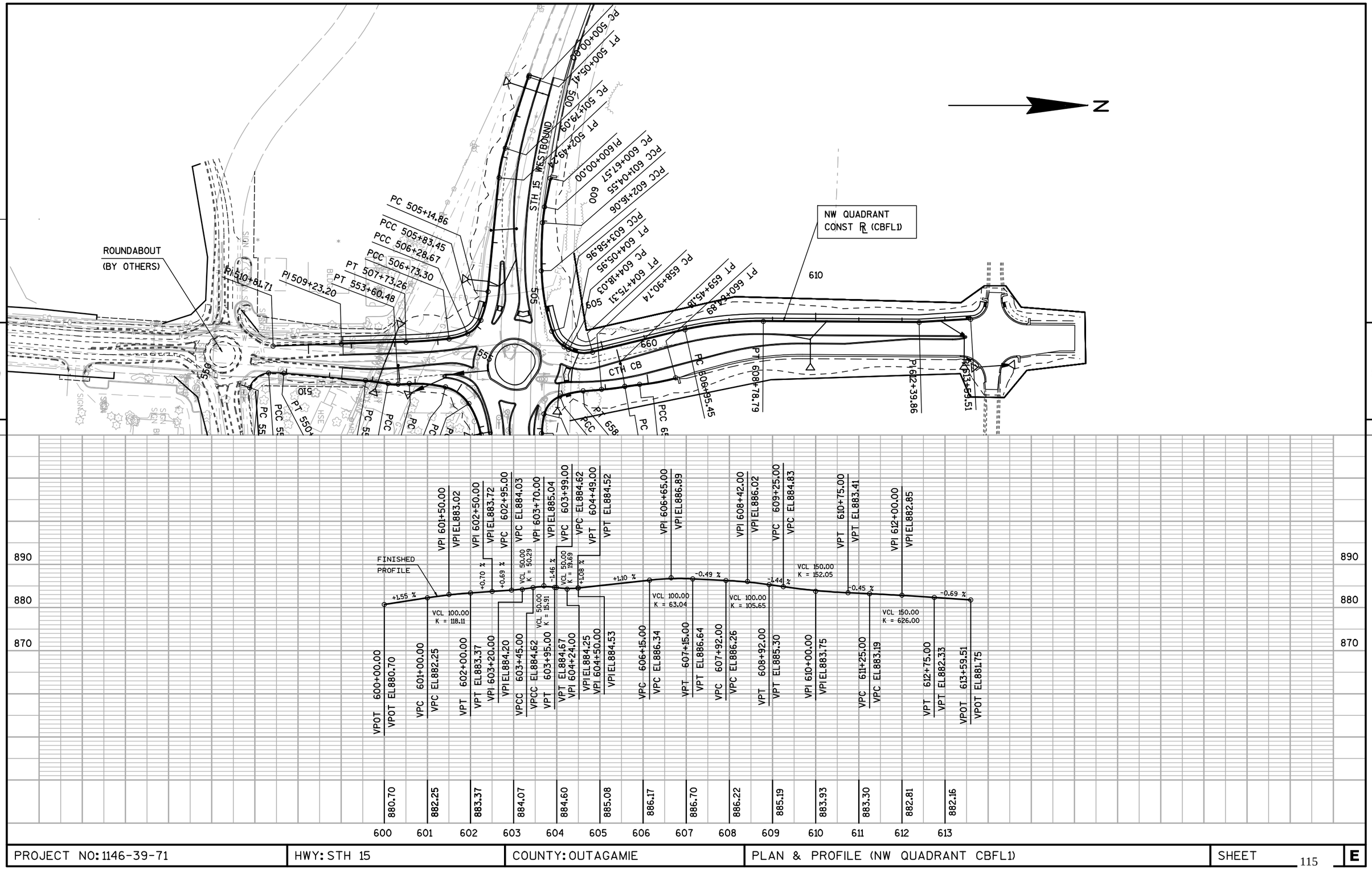

PROJECT NO: 1146-39-71	HWY: STH 15	COUNTY: OUTAGAMIE	PLAN & PROFILE (NW QUADRANT CBFL1)	SHEET 115 E

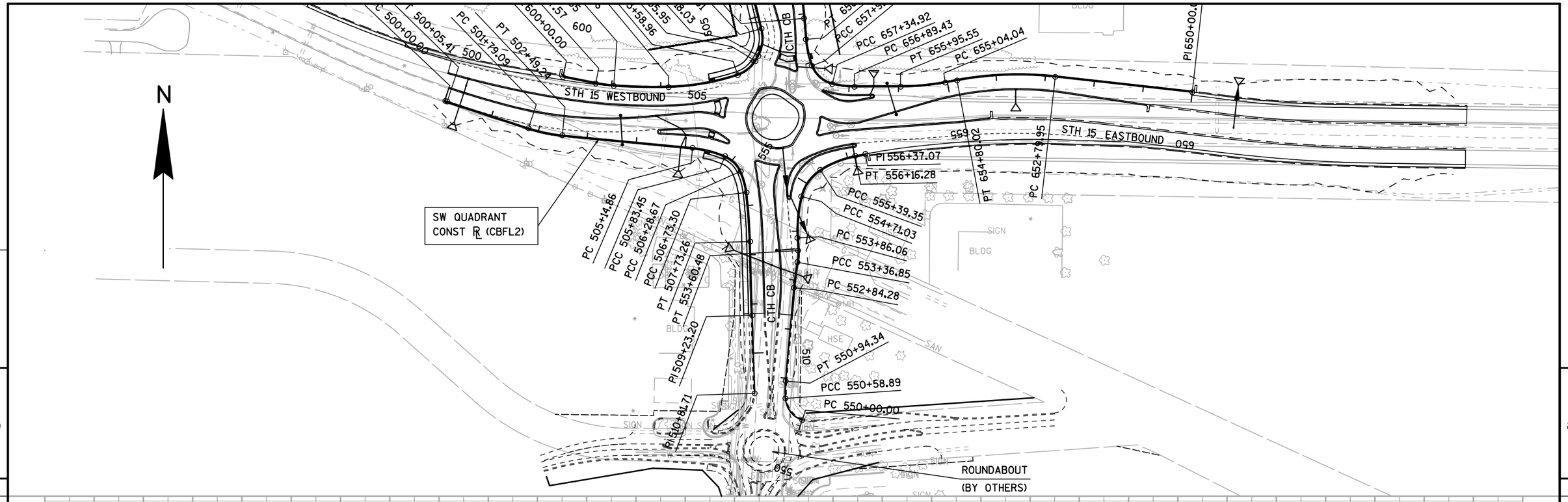

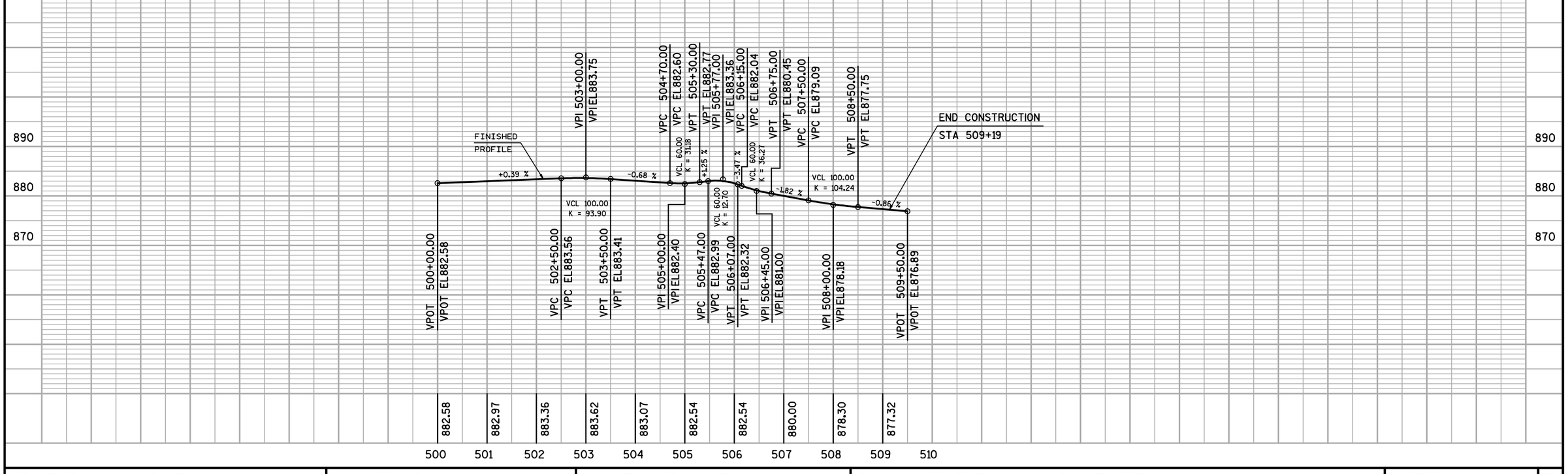

PROJECT NO: 1146-39-71	HWY: STH 15	COUNTY: OUTAGAMIE	PLAN & PROFILE (SW QUADRANT CBFL2)	SHEET E

FILE NAME : F:\d3_114639\050108_pp.dgn PLOT DATE : 27-JUL-2011 13:27 PLOT BY : dotmzc PLOT NAME : 050108 pp PLOT SCALE : 200.000000:1.000000
WISDOT/CADDS SHEET 40

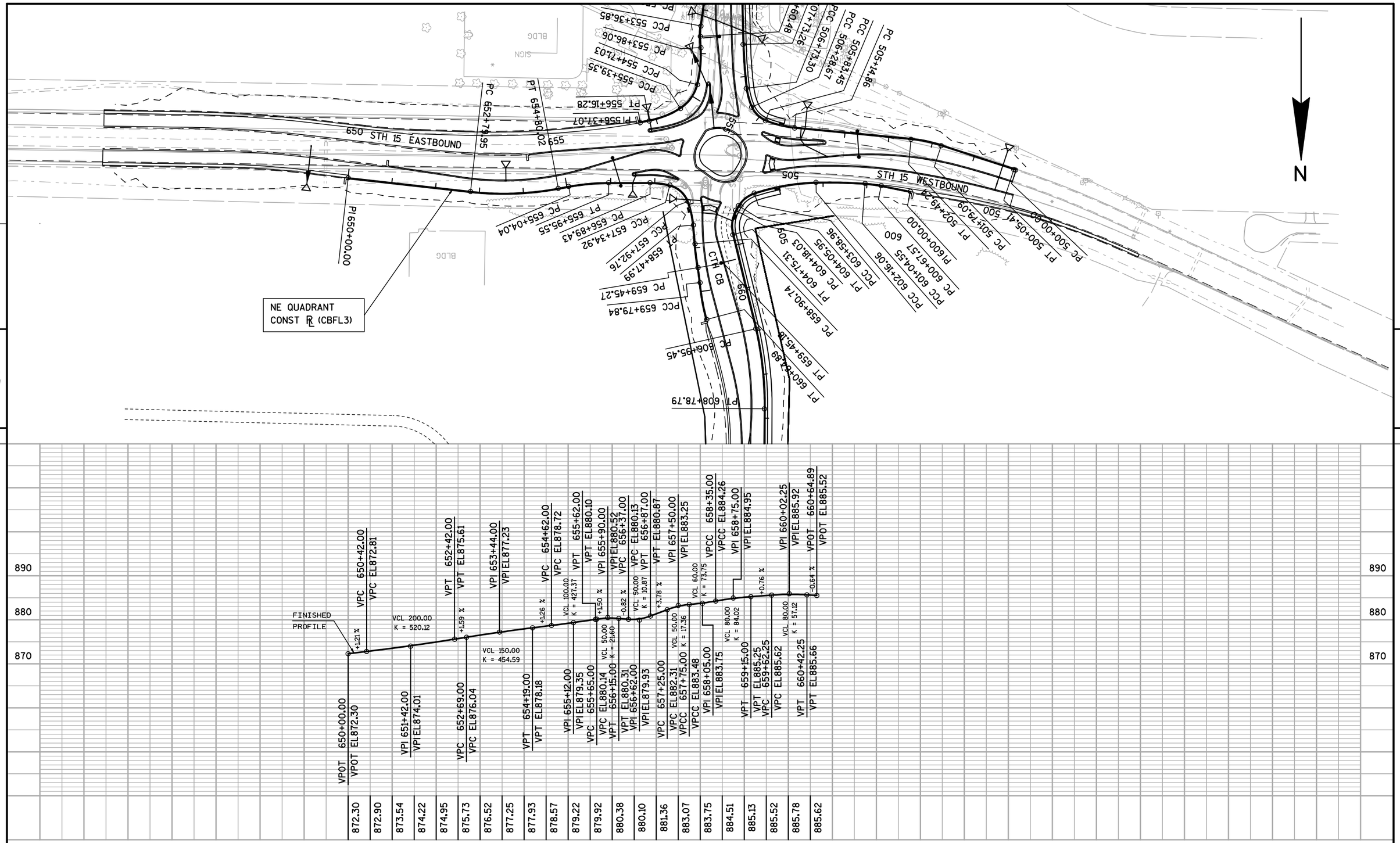

PROJECT NO: 1146-39-71	HWY: STH 15	COUNTY: OUTAGAMIE	PLAN & PROFILE (NE QUADRANT CBFL3)	SHEET 117 E

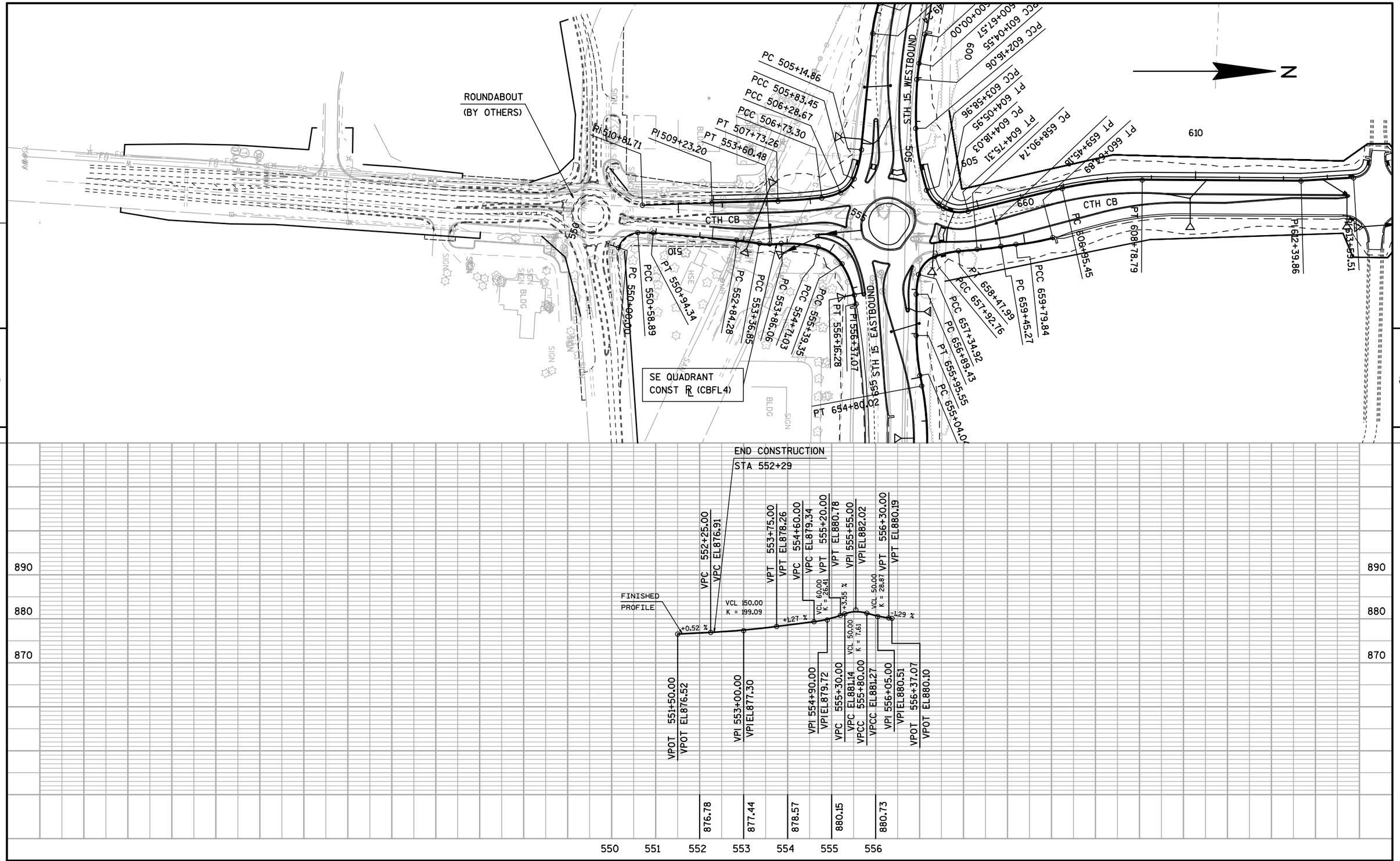

PROJECT NO: 1146-39-71	HWY: STH 15	COUNTY: OUTAGAMIE	PLAN & PROFILE (SE QUADRANT CBFL4)	SHEET 118 E

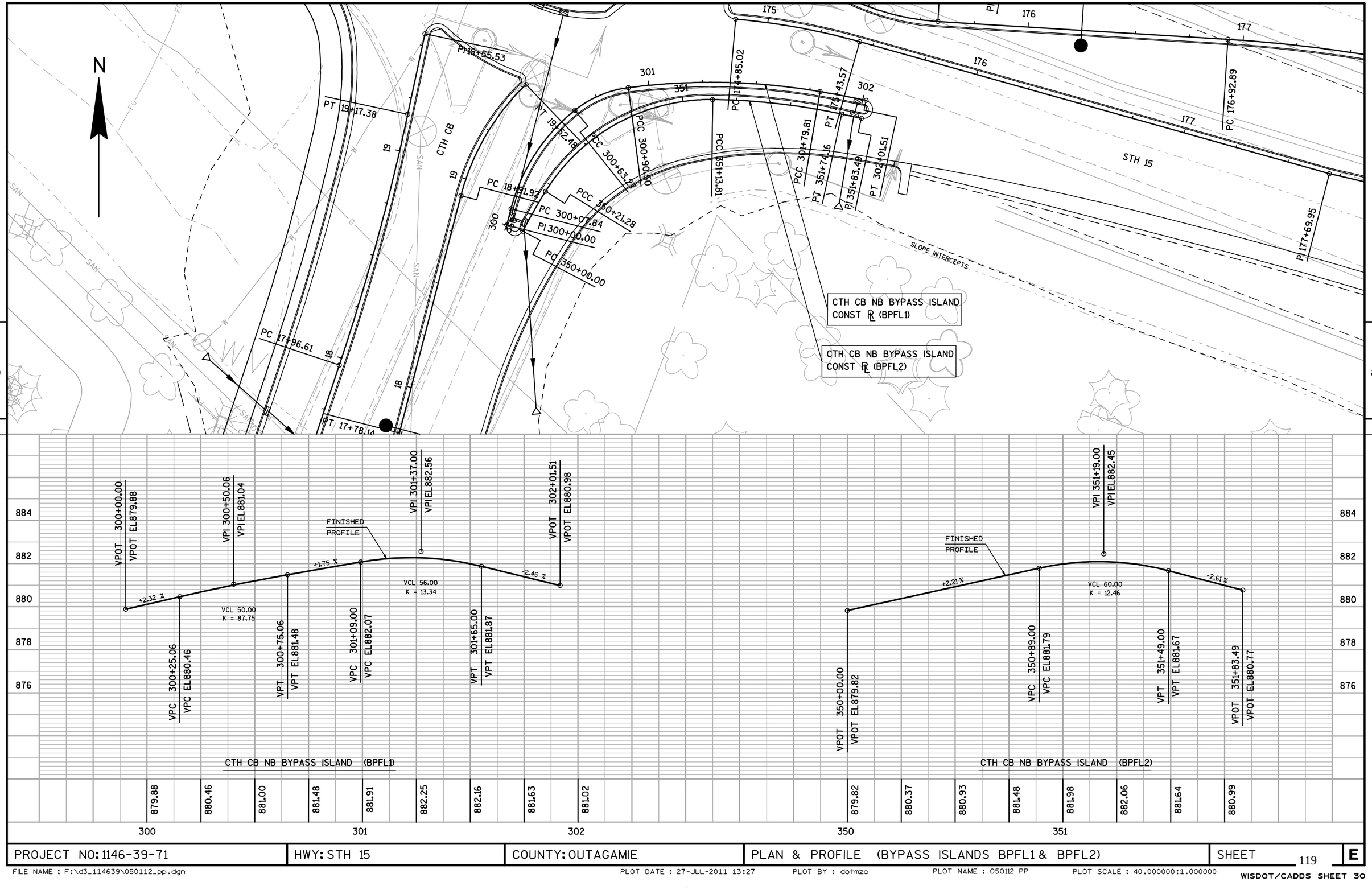

PROJECT NO: 1146-39-71	HWY: STH 15	COUNTY: OUTAGAMIE	PLAN & PROFILE (BYPASS ISLANDS BPFL1 & BPFL2)	SHEET 119 E

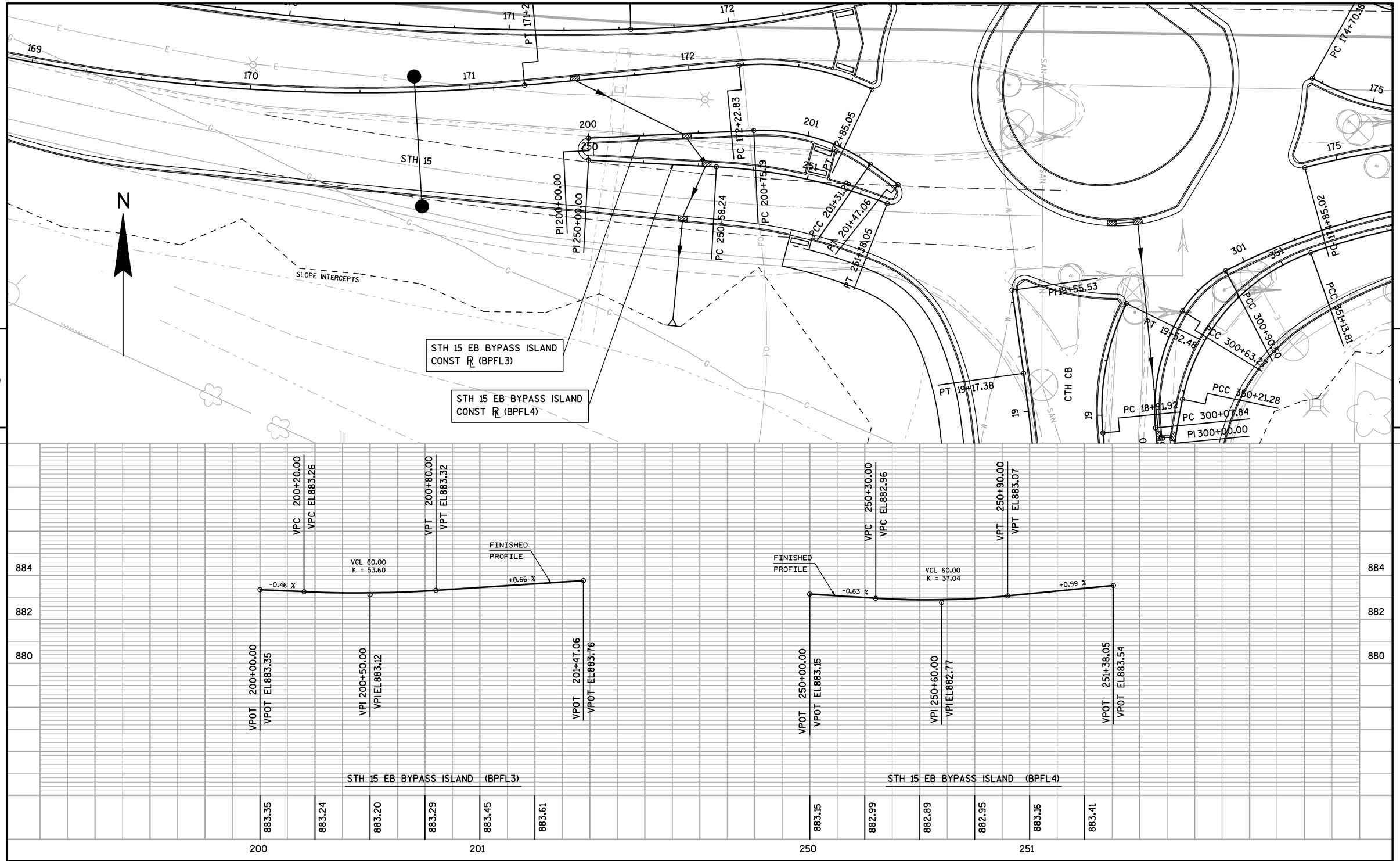

PROJECT NO: 1146-39-71	HWY: STH 15	COUNTY: OUTAGAMIE	PLAN & PROFILE (BYPASS ISLANDS BPFL3 & BPFL4)	SHEET 120 E

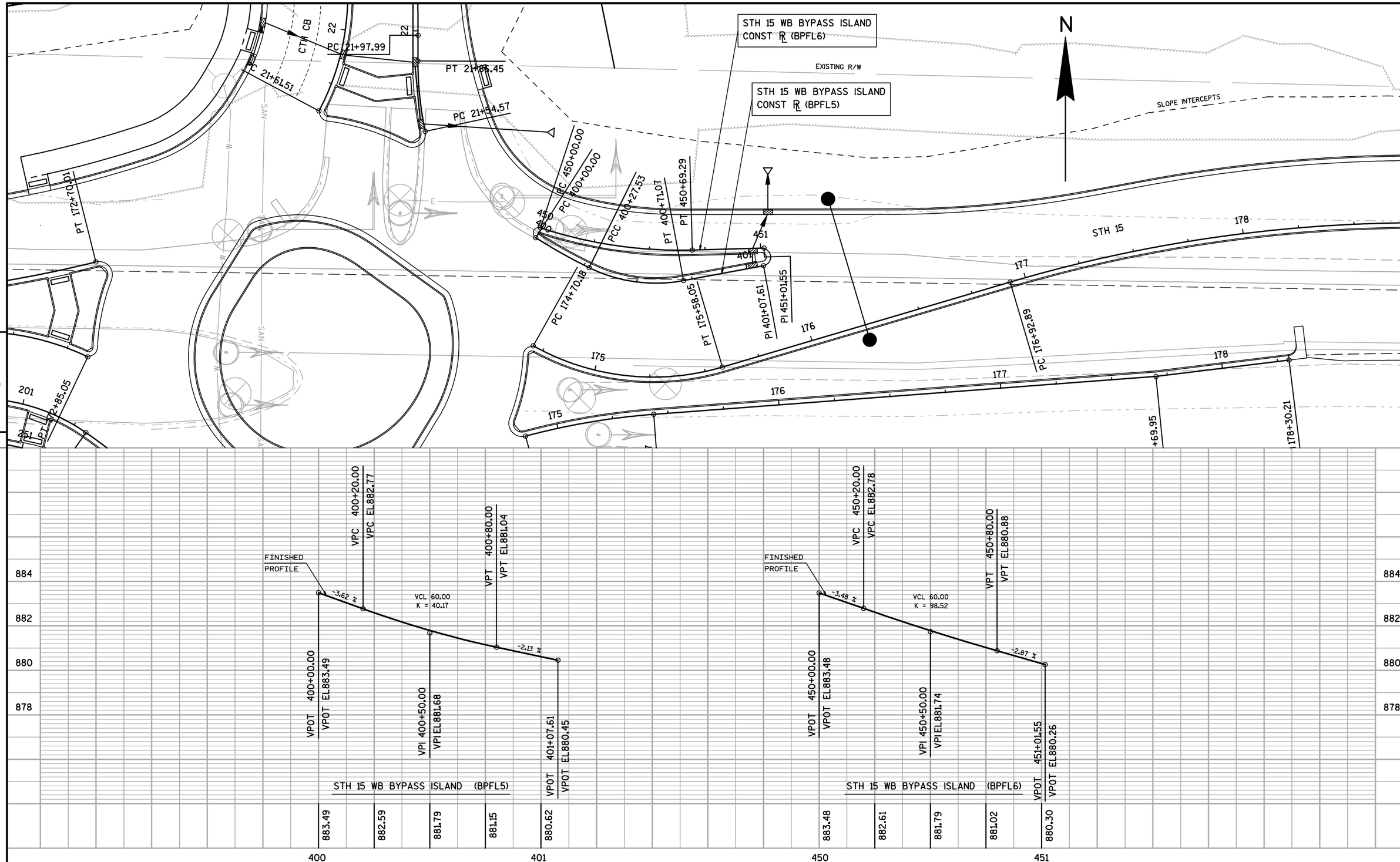

PROJECT NO:1146-39-71	HWY:STH 15	COUNTY:OUTAGAMIE	PLAN & PROFILE (BYPASS ISLANDS BPFL5 & BPFL6)	SHEET 121	E

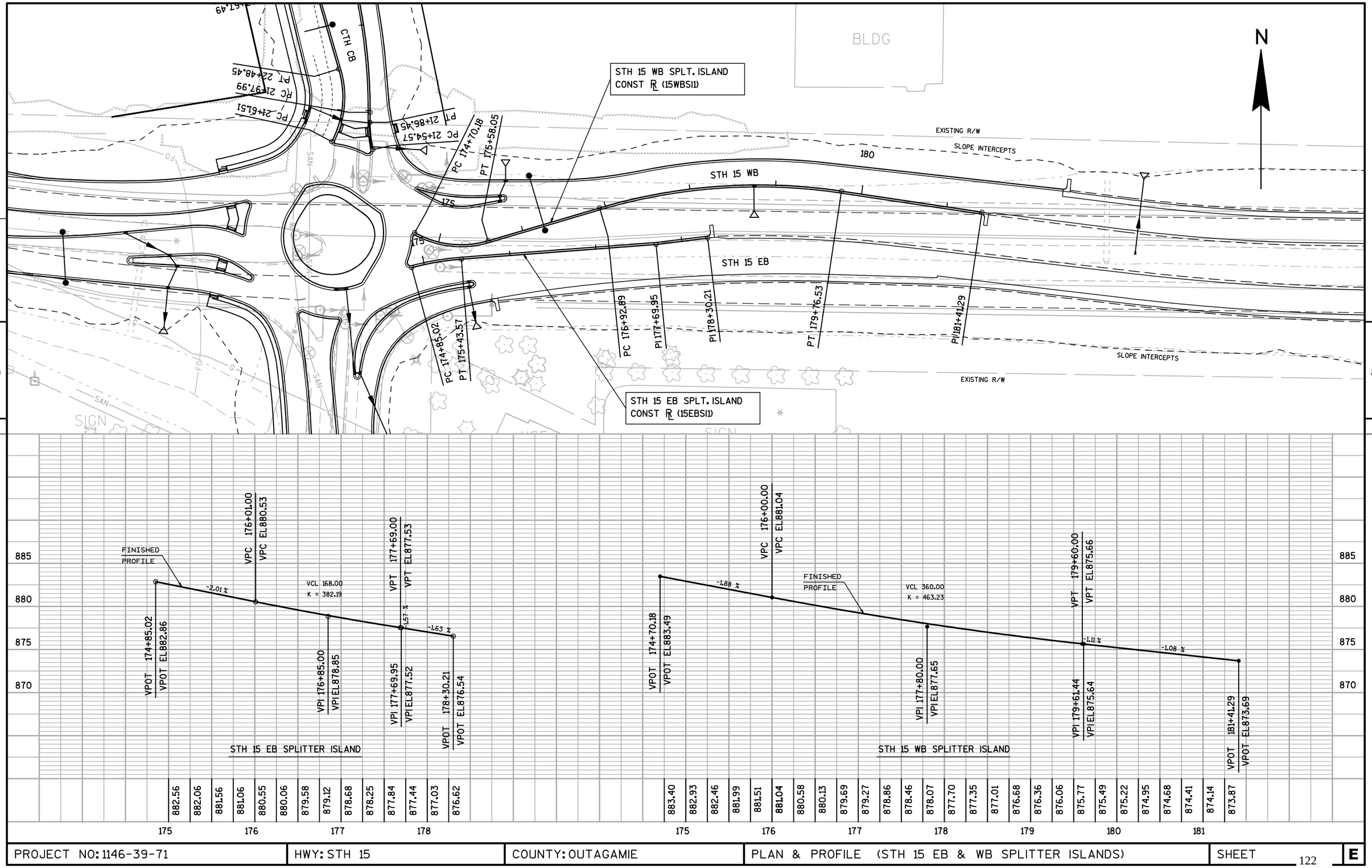

PROJECT NO: 1146-39-71	HWY: STH 15	COUNTY: OUTAGAMIE	PLAN & PROFILE (STH 15 EB & WB SPLITTER ISLANDS)	SHEET 122 E

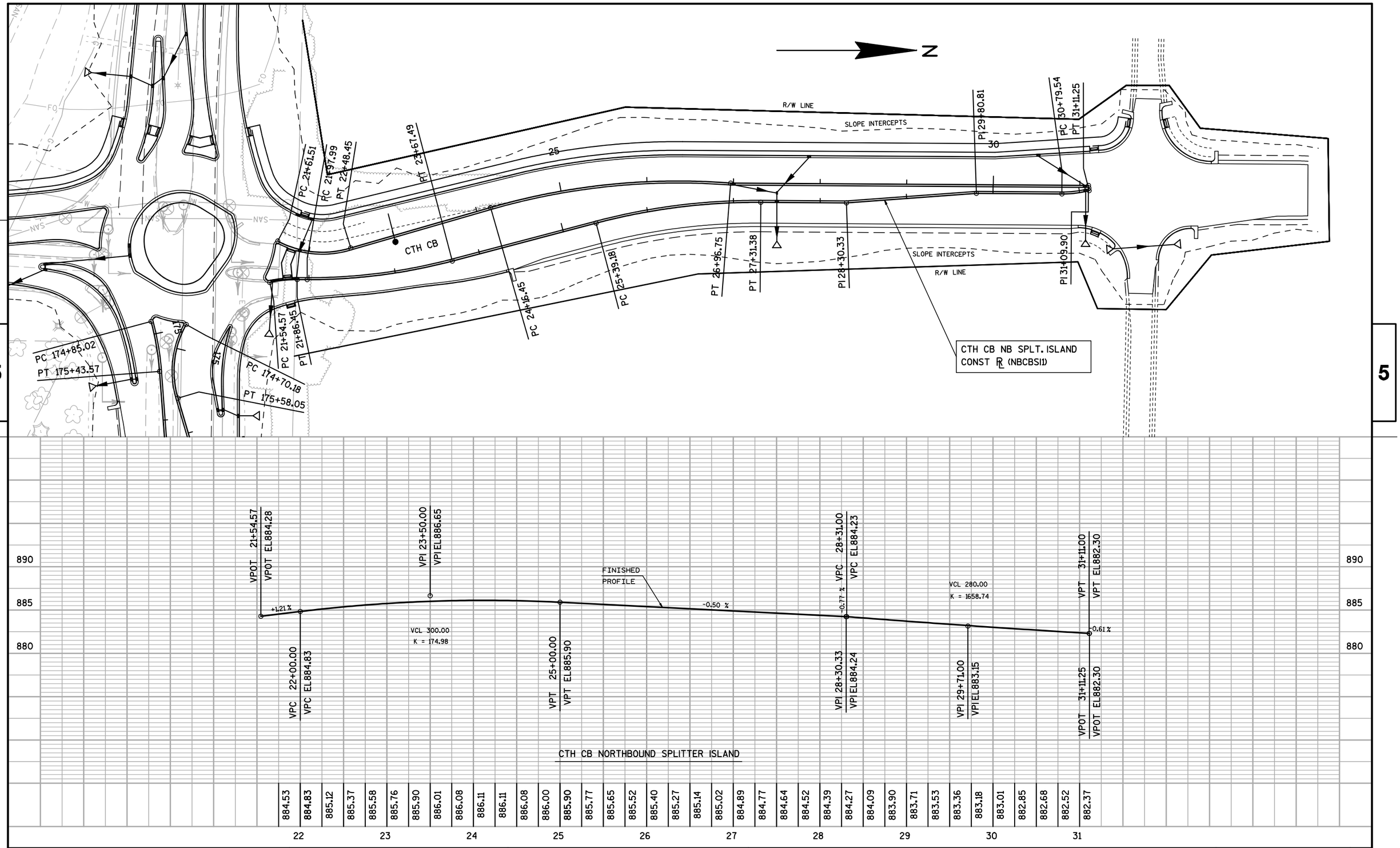

PROJECT NO: 1146-39-71	HWY: STH 15	COUNTY: OUTAGAMIE	PLAN & PROFILE (CTH CB NB SPLITTER ISLAND NBCBSI1)	SHEET 123 E

FILE NAME : F:\d3_114639\050113_pp.DGN PLOT DATE : 27-JUL-2011 13:27 PLOT BY : dotmzc PLOT NAME : 050113 pp PLOT SCALE : 100.000000:1.000000

WISDOT/CADDS SHEET 40

CTH CB SB SPLT. ISLAND
CONST ℄ (SBCBSI1)

N

R/W LINE
SLOPE INTERCEPTS
SLOPE INTERCEPTS
R/W LINE

CTH CB

PC 21+61.51
RC 21+97.99
PT 22+48.45
PT 23+67.49
PC 24+16.45
PC 25+39.18
PT 26+96.75
PT 27+31.38
PI 28+30.33
PI 29+80.81
PC 30+79.54
PT 31+11.25
PI 31+09.90

PC 21+54.57
PT 21+86.45

PC 174+85.02
PT 175+43.57
PC 174+70.18
PT 175+58.05

CTH CB SOUTHBOUND SPLITTER ISLAND

VPOT 21+61.51 VPOT EL884.89
VPC 22+35.00 VPC EL885.52
VPI 23+50.00 VPI EL886.50
VPT 24+65.00 VPT EL885.91
VPI 26+40.85 VPI EL885.02
VPI 27+00.00 VPI EL884.68
VPI 28+00.00 VPI EL884.17
VPI 29+00.00 VPI EL883.66
VPC 30+00.00 VPC EL883.14
VPI 30+54.50 VPI EL882.85
VPT 31+09.00 VPT EL882.40
VPOT 31+09.90 VPOT EL882.39

FINISHED PROFILE

+0.85 %
-0.51 %
-0.57 %
-0.51 %
-0.51 %
-0.52 %
-0.83 %

VCL 230.00
K = 168.74
VCL 109.00
K = 356.14

22	23	24	25	26	27	28	29	30	31
885.01	885.64	886.11	886.12	885.98	885.74	885.48	885.10	884.82	884.55	884.30	884.17	883.91	883.66	883.40	883.14	882.84	882.66
885.22	885.81	886.13	886.07	885.86	885.61	885.36	884.97	884.68	884.42	884.04	883.79	883.53	883.27	883.00	882.47
885.43	885.95	886.05															

890
885
880

PROJECT NO: 1146-39-71	HWY: STH 15	COUNTY: OUTAGAMIE	PLAN & PROFILE (CTH CB SB SPLITTER ISLAND SBCBSI1)	SHEET 124 E

FILE NAME : F:\d3_114639\050114_pp.dgn PLOT DATE : 27-JUL-2011 13:27 PLOT BY : dotmzc PLOT NAME : 050114 pp PLOT SCALE : 100.000000:1.000000

WISDOT/CADDS SHEET 40

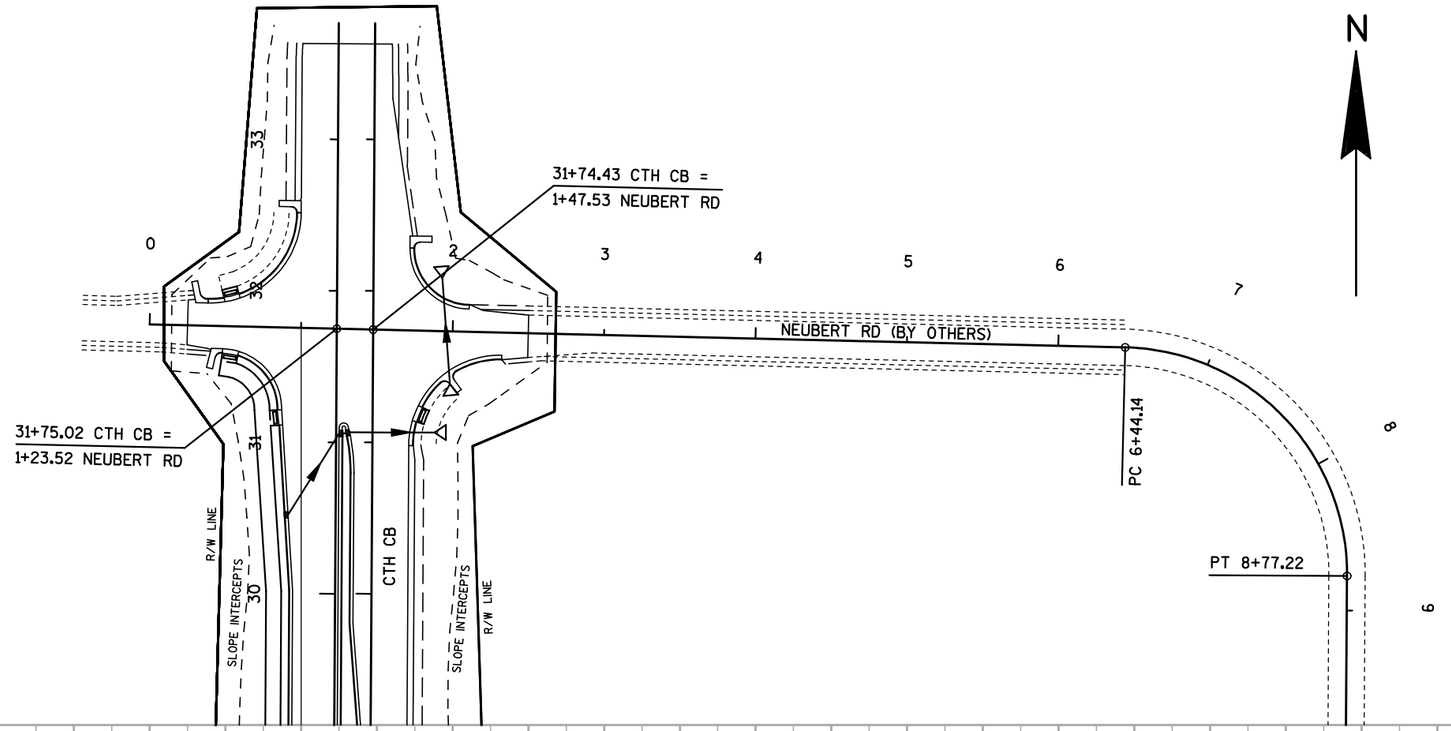

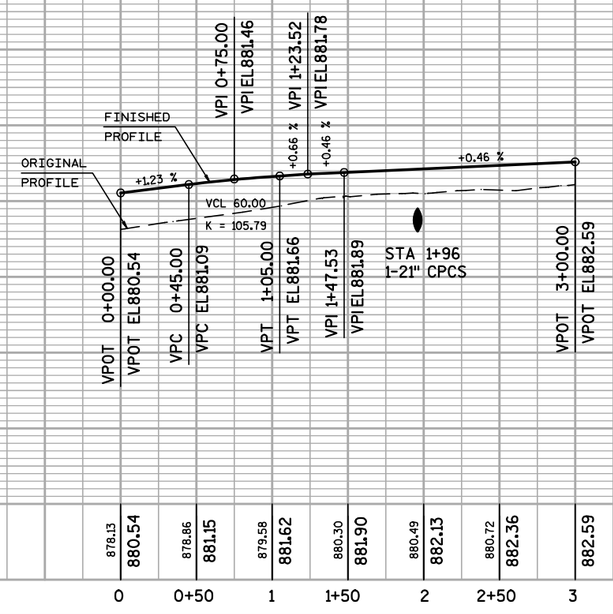

PROJECT NO: 1146-39-71	HWY: STH 15	COUNTY: OUTAGAMIE	PLAN & PROFILE (NEUBERT RD)	SHEET	E

FILE NAME : F:\d3_114639\050117_pp.DGN PLOT DATE : 27-JUL-2011 13:27 PLOT BY : dotmzc PLOT NAME : 050117 pp PLOT SCALE : 100.000000:1.000000

WISDOT/CADDS SHEET 40

Standard Detail Drawing List

08A5-16A	INLET COVERS TYPE A, H, A-S, & H-S
08A5-16B	INLET COVERS TYPE B, B-A, C, MS, MS-A, & WM
08A5-17C	INLET COVERS TYPE F, HM, HM-S, S, T, V, HM-GJ, & HM-GJ-S
08B6-4	MANHOLES TYPE 1
08C1-5	INLETS TYPE 1, 2, 3 & 4
08C5-2	INLETS TYPE 8, 9, 10, AND 11
08D1-17	CONCRETE CURB, CONCRETE CURB AND GUTTER AND TIES
08D4-5	CONCRETE SURFACE DRAINS & ASPHALTIC FLUMES
08D5-14A	CURB RAMPS TYPES 1 AND 1-A
08D5-14B	CURB RAMPS TYPES 2 AND 3
08D5-14C	CURB RAMPS TYPE 4A
08D5-14D	CURB RAMPS TYPE 4B
08D5-14E	CURB RAMPS TYPES 5, 6, 7A, 7B & 8
08E8-3	TYPICAL INSTALLATIONS OF EROSION BALES / TEMPORARY DITCH CHECKS
08E9-6	SILT FENCE
08E10-2	INLET PROTECTION TYPE A, B, C AND D
08F1-11	APRON ENDWALLS FOR CULVERT PIPE
08F4-6	JOINT TIES FOR CONCRETE PIPE
09A1-12A	AT-GRADE SIDE ROAD INTERSECTION, TYPES "B1", "B2", "C" AND D AND TEE INTERSECTION BYPASS LANE
09B2-7	CONDUIT
09B4-9	PULL BOX
09C2-6	CONCRETE BASES, TYPES 1, 2 & 5
09C3-3	TRANSFORMER/PEDESTAL BASES
09C5-7	CONCRETE CONTROL CABINET BASES
09D1-4	CABINET SERVICE INSTALLATION (METER BREAKER PEDESTAL)
09E1-10D	POLE MOUNTINGS FOR LIGHTING UNITS, TYPE 5 (30 FEET)
09E1-10G	HARDWARE DETAILS FOR POLE MOUNTINGS
09E3-3	NON-FREEWAY LIGHTING UNIT POLE WIRING
11B2-2	CONCRETE MEDIAN NOSE
12A4-1	STRUCTURE IDENTIFICATION PLAQUES, SIGN BRIDGES & OVERHEAD SIGN SUPPORT
13C1-15	CONCRETE PAVEMENT LONGITUDINAL JOINTS AND TIES
13C11-10A	RURAL DOWELED CONCRETE PAVEMENT
13C11-10B	RURAL DOWELED CONCRETE PAVEMENT
13C18-1A	CONCRETE PAVEMENT JOINTING
13C18-1B	CONCRETE PAVEMENT STEEL REINFORCEMENT
13C18-1C	CONCRETE PAVEMENT JOINT TIES
13C18-1D	CONCRETE PAVEMENT JOINTING AT UTILITY FIXTURES
14A2-1	TREE PLANTING DETAIL
15A3-1	MARKER POSTS, FLEXIBLE, FOR CULVERT END
15C2-4A	BARRICADES AND SIGNS FOR MAINLINE CLOSURES
15C2-4B	BARRICADES AND SIGNS FOR MAINLINE CLOSURES
15C2-4C	DETOUR SIGNING FOR MAINLINE CLOSURES
15C4-1	TRAFFIC CONTROL, ADVANCE WARNING SIGNS 45 M.P.H. OR GREATER TWO-WAY UNDIVIDED ROAD OPEN TO TRAFFIC
15C7-11A	PAVEMENT MARKING SYMBOLS
15C7-11B	PAVEMENT MARKING WORDS
15C7-11E	ROUNDABOUT ARROWS
15C8-13A	PAVEMENT MARKING (MAINLINE)
15C8-13F	PAVEMENT MARKING (ISLANDS, STOP LINE & CROSS WALK)
15C8-13G	PAVEMENT MARKING (RAMPS & GORES)
15C8-13H	LANE DROP PAVEMENT MARKING
15C18-3	MEDIAN ISLAND MARKING
15C20-1	YIELD MARKING
15C27-1	DOUBLE ARROW WARNING SIGN PLACEMENT

6

NOTE:
GRATE IS REVERSIBLE.

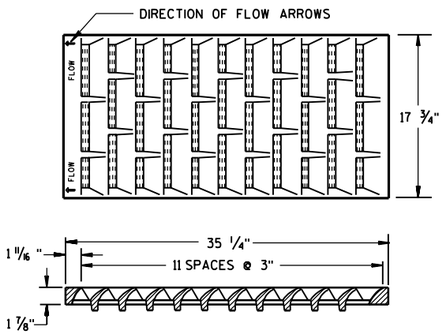

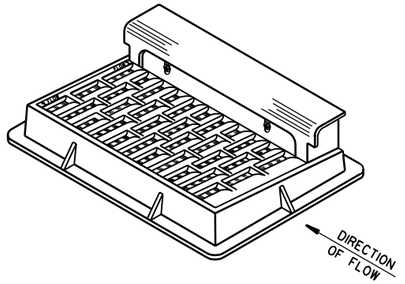

NOTE: CURB BOX HEIGHT ADJUSTABLE 6" TO 9"

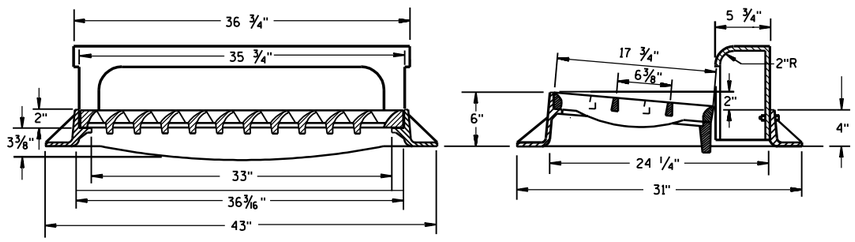

TYPE "H"

(APPROXIMATE WEIGHT 422 LBS.)
FRAME..... 175 LBS.
GRATE..... 138 LBS.
CURB BOX..... 109 LBS.

1 1/8" DIAGONAL BARS WITH 1 5/8" OPENINGS

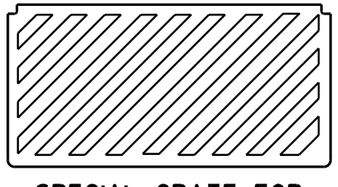

SPECIAL GRATE FOR TYPE "H" COVER

(MEASURES 35 1/4" X 17 3/4" X 2")
(APPROXIMATE WEIGHT 172 LBS.)
GRATE..... 172 LBS.

(NOTED AS TYPE H-S ON DRAINAGE TABLE)

GENERAL NOTES

DETAILS OF CONSTRUCTION, MATERIALS AND WORKMANSHIP NOT SHOWN ON THIS DRAWING SHALL CONFORM TO THE PERTINENT REQUIREMENTS OF THE STANDARD SPECIFICATIONS AND THE APPLICABLE SPECIAL PROVISIONS.

DETAIL DRAWINGS FOR PROPOSED ALTERNATE DESIGNS FOR CATCH BASIN, MANHOLE AND INLET COVERS SHALL BE SUBMITTED TO THE ENGINEER FOR APPROVAL PROVIDING THAT SUCH ALTERNATE DESIGNS MAKE PROVISION FOR EQUIVALENT CAPACITY AND STRENGTH.

ROUND FRAMES AND COVERS SHALL HAVE CONTINUOUSLY MACHINED BEARING SURFACES TO PREVENT ROCKING AND RATTLING.

THE ACTUAL WEIGHT OF COVERS MAY VARY WITHIN 5 PERCENT, PLUS OR MINUS, OF THE APPROXIMATE WEIGHT.

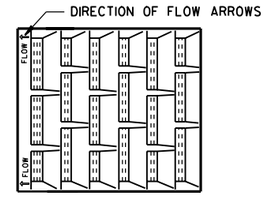

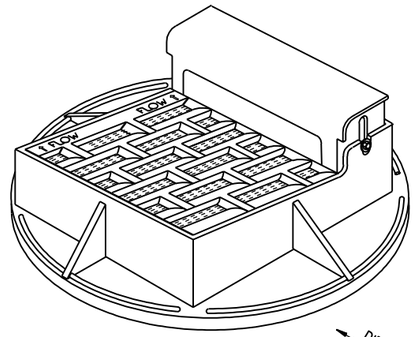

NOTE: CURB BOX ADJUSTABLE 4" TO 9"

NOTE:
GRATE IS REVERSIBLE.

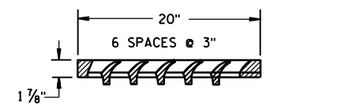

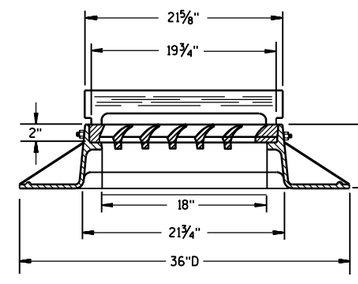

TYPE "A"

(APPROXIMATE WEIGHT 325 LBS.)
FRAME..... 157 LBS.
GRATE..... 84 LBS.
CURB BOX..... 84 LBS.

1" DIAGONAL BARS WITH 1 1/2" OPENINGS

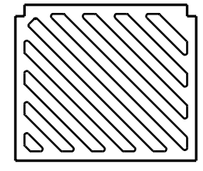

SPECIAL GRATE FOR TYPE "A" COVER

(MEASURES 19 3/4" X 17" X 1 7/8"
GRATE..... 84 LBS.

(NOTED AS TYPE A-S ON DRAINAGE TABLE)

INLET COVERS
TYPE A, H, A-S, & H-S

STATE OF WISCONSIN
DEPARTMENT OF TRANSPORTATION

APPROVED
10/4/99
DATE
CHIEF ROADWAY DEVELOPMENT ENGINEER
FHWA

6

S.D.D. 8 A 5-16a

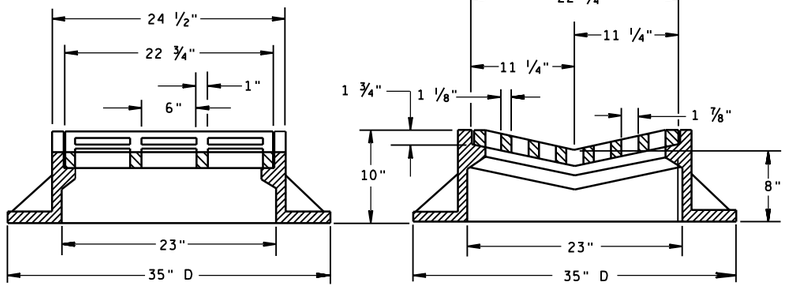

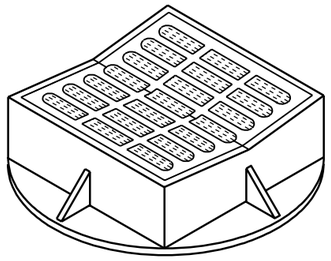

TYPE "B"

(APPROXIMATE WEIGHT 395 LBS.)

FRAME..... 285 LBS.
GRATE..... 110 LBS.

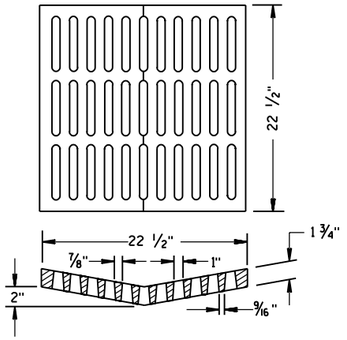

ALTERNATIVE GRATE FOR TYPE "B" COVER

(APPROXIMATE GRATE WEIGHT 125 LBS.)
GRATE.....125 LBS.

USE WHERE PEDESTRIAN OR BICYCLE TRAFFIC IS POSSIBLE.

NOTED AS TYPE B-A ON THE DRAINAGE TABLE

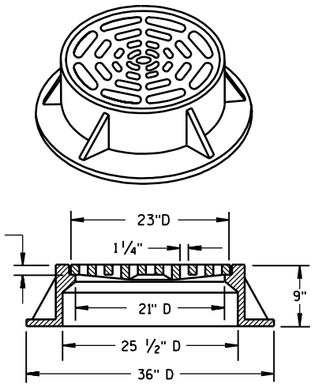

TYPE "C"

(APPROXIMATE WEIGHT 340 LBS.)

FRAME..... 235 LBS.
GRATE..... 105 LBS.

GENERAL NOTES

DETAILS OF CONSTRUCTION, MATERIALS AND WORKMANSHIP NOT SHOWN ON THIS DRAWING SHALL CONFORM TO THE PERTINENT REQUIREMENTS OF THE STANDARD SPECIFICATIONS AND THE APPLICABLE SPECIAL PROVISIONS.

DETAIL DRAWINGS FOR PROPOSED ALTERNATE DESIGNS FOR CATCH BASIN, MANHOLE AND INLET COVERS SHALL BE SUBMITTED TO THE ENGINEER FOR APPROVAL PROVIDING THAT SUCH ALTERNATE DESIGNS MAKE PROVISION FOR EQUIVALENT CAPACITY AND STRENGTH.

ROUND FRAMES AND COVERS SHALL HAVE CONTINUOUSLY MACHINED BEARING SURFACES TO PREVENT ROCKING AND RATTLING.

THE ACTUAL WEIGHT OF COVERS MAY VARY WITHIN 5 PERCENT, PLUS OR MINUS, OF THE APPROXIMATE WEIGHT.

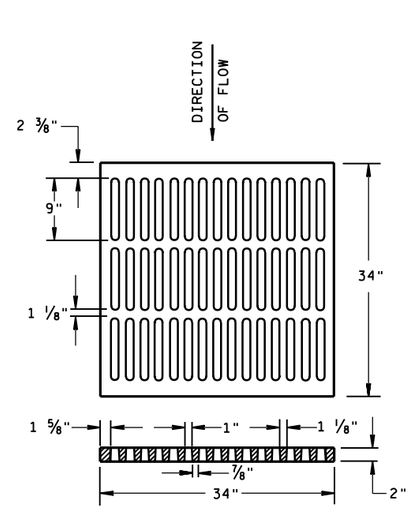

ALTERNATIVE TYPE "MS"

(APPROXIMATE GRATE WEIGHT 365 LBS.)
GRATE.....365 LBS.

USE WHERE PEDESTRIAN OR BICYCLE TRAFFIC IS PERMITTED

NOTED AS TYPE MS-A ON THE DRAINAGE TABLE

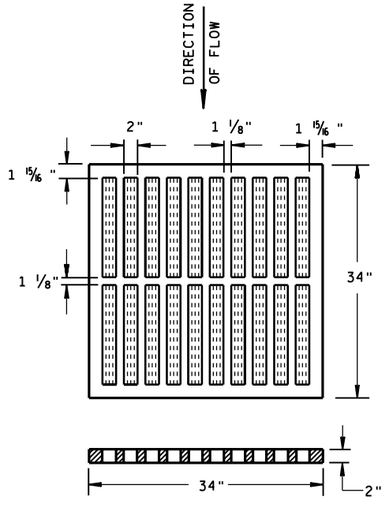

TYPE "MS"

(APPROXIMATE GRATE WEIGHT 270 LBS.)
GRATE.....270 LBS.

USE ON FREEWAYS AND EXPRESSWAYS

NOTED AS TYPE MS ON DRAINAGE TABLE

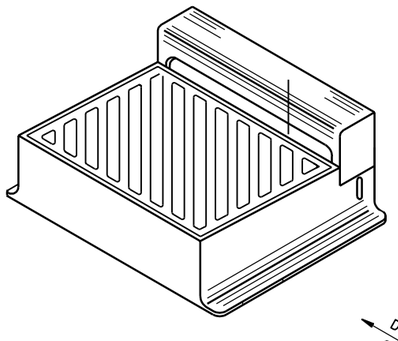

DIAGONAL SLOTS, SHALL BE ORIENTED TO THE DIRECTION OF FLOW AS ILLUSTRATED. GRATES ARE MANUFACTURED TO BE REVERSIBLE.

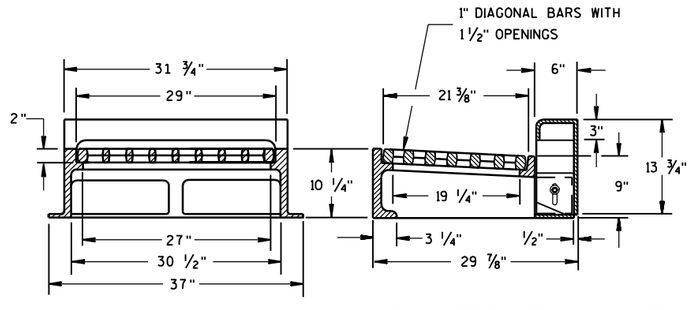

NOTE: CURB BOX HEIGHT ADJUSTABLE 6" TO 9"

TYPE "WM"

(APPROXIMATE WEIGHT 670 LBS.)

FRAME..... 360 LBS.
GRATE..... 160 LBS.
CURB BOX..... 150 LBS.

INLET COVERS
TYPE B, B-A, C, MS, MS-A, & WM

STATE OF WISCONSIN
DEPARTMENT OF TRANSPORTATION

APPROVED
10/4/99
DATE
FHWA

CHIEF ROADWAY DEVELOPMENT ENGINEER

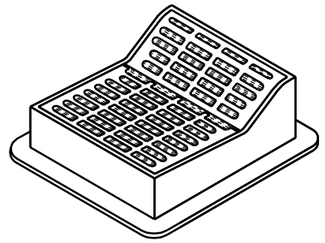

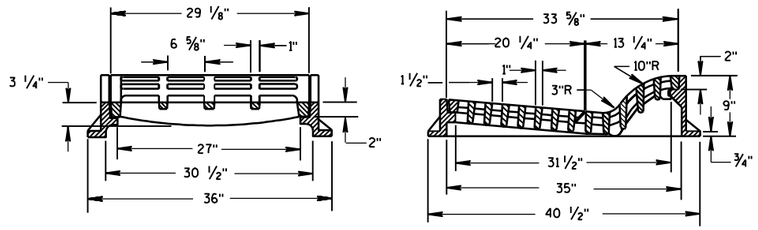

TYPE "F"

(APPROXIMATE WEIGHT 645 LBS.)

FRAME.....300 LBS.
GRATE.....165 LBS.
GRATE.....180 LBS.

USE WITH TYPES A & D CONCRETE CURB & GUTTER, 36 INCH.

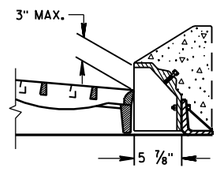

ALTERNATIVE CURB BOX FOR TYPE "HM" COVER

(APPROXIMATE WEIGHT 79 LBS.)
CURB BOX.....79 LBS.

USE WITH TYPES G & J CONCRETE CURB & GUTTER, 30 INCH
NOTED AS TYPE HM-GJ ON DRAINAGE TABLE

NOTE:
SPECIAL GRATE FOR THE
TYPE "H" COVER MAY ALSO BE
USED FOR THE TYPE "HM-GJ" COVER
NOTED AS TYPE HM-GJ-S ON DRAINAGE TABLE

GENERAL NOTES

DETAILS OF CONSTRUCTION, MATERIALS AND WORKMANSHIP NOT SHOWN ON THIS DRAWING SHALL CONFORM TO THE PERTINENT REQUIREMENTS OF THE STANDARD SPECIFICATIONS AND THE APPLICABLE SPECIAL PROVISIONS.

DETAIL DRAWINGS FOR PROPOSED ALTERNATE DESIGNS FOR INLET COVERS SHALL BE SUBMITTED TO THE ENGINEER FOR APPROVAL PROVIDING THAT SUCH ALTERNATE DESIGNS MAKE PROVISION FOR EQUIVALENT CAPACITY AND STRENGTH.

THE ACTUAL WEIGHT OF COVERS MAY VARY WITHIN 5 PERCENT, PLUS OR MINUS, OF THE APPROXIMATE WEIGHT.

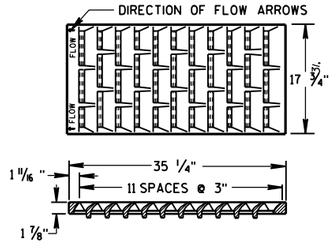

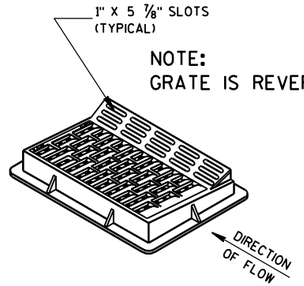

NOTE:
GRATE IS REVERSIBLE.

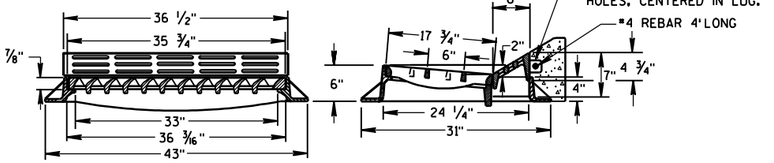

TYPE "HM"

(APPROXIMATE WEIGHT 375 LBS.)
FRAME.....175 LBS.
GRATE.....138 LBS.
CURB BOX..... 62 LBS.

USE WITH TYPES A & D CONCRETE CURB & GUTTER, 36 INCH.

NOTE:
SPECIAL GRATE FOR THE
TYPE "H" COVER MAY ALSO BE
USED FOR THE TYPE "HM" COVER
NOTED AS TYPE HM-S ON DRAINAGE TABLE

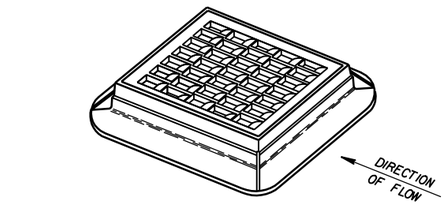

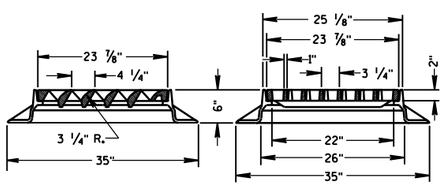

TYPE "S"

(APPROXIMATE WEIGHT 334 LBS.)

FRAME.....165 LBS.
GRATE.....169 LBS.

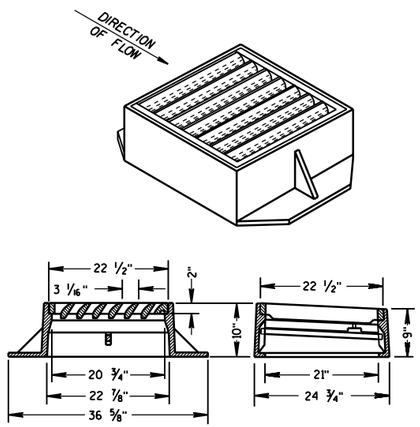

TYPE "V"

(APPROXIMATE WEIGHT 405 LBS.)

FRAME.....270 LBS.
GRATE.....130 LBS.
SAFETY BAR..... 5 LBS.

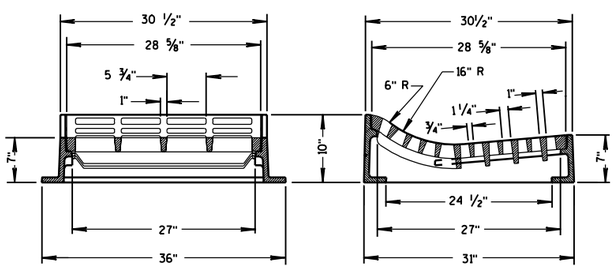

TYPE "T"

(APPROXIMATE WEIGHT 530 LBS.)
FRAME.....270 LBS.
GRATE.....260 LBS.

USE WITH TYPES R & T CONCRETE CURB & GUTTER, 30 INCH.

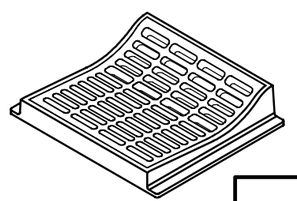

INLET COVERS
TYPE F, HM, HM-S, S, T, V, HM-GJ, & HM-GJ-S

STATE OF WISCONSIN
DEPARTMENT OF TRANSPORTATION

APPROVED
12/17/07
DATE
/S/ Jerry H. Zogg
ROADWAY STANDARDS DEVELOPMENT ENGINEER
FHWA

6

S.D.D. 8 A 5-17c

6

S.D.D. 8 A 5-17c

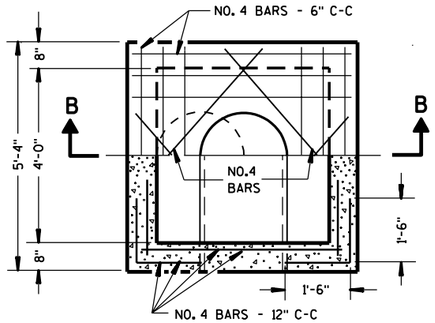

HALF SECTION A-A

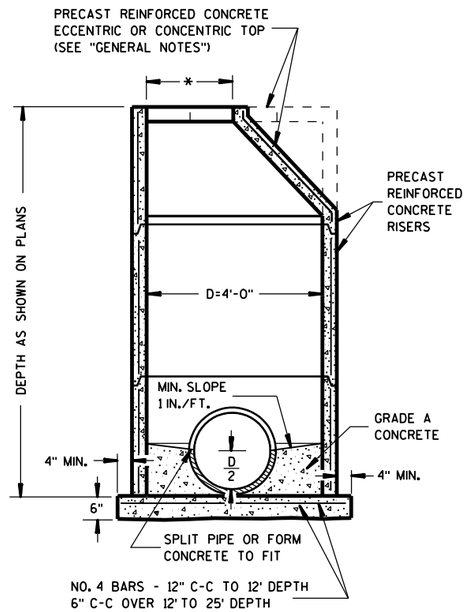

PRECAST REINFORCED CONCRETE

GENERAL NOTES

DETAILS OF CONSTRUCTION, MATERIALS AND WORKMANSHIP NOT SHOWN ON THIS DRAWING SHALL CONFORM TO THE PERTINENT REQUIREMENTS OF THE STANDARD SPECIFICATIONS AND THE APPLICABLE SPECIAL PROVISIONS.

DETAILED DRAWINGS FOR PROPOSED ALTERNATE DESIGNS FOR UNDERGROUND DRAINAGE STRUCTURES SHALL BE SUBMITTED TO THE ENGINEER FOR APPROVAL PROVIDING THAT SUCH ALTERNATE DESIGNS MAKE PROVISION FOR EQUIVALENT CAPACITY AND STRENGTH.

ALL DRAINAGE STRUCTURES ARE DESIGNATED ON THE PLANS AS "MANHOLES 1-C", "CATCH BASINS 1-B", "INLETS 3-H", ETC. THE FIRST DIGIT DESIGNATES THE MASONRY PORTION OF THE STRUCTURE, AND THE FOLLOWING LETTER DESIGNATES THE TYPE OF COVER TO BE USED TO COMPRISE THE COMPLETE UNIT.

PRECAST REINFORCED BASES SHALL BE PLACED ON A BED OF MATERIAL AT LEAST 6 INCHES IN DEPTH, WHICH MEETS THE REQUIREMENTS OF GRANULAR BACKFILL. THIS BEDDING SHALL BE COMPACTED AND PROVIDE UNIFORM SUPPORT FOR THE ENTIRE AREA OF THE BASE.

PRECAST REINFORCED CONE TOPS (ECCENTRIC OR CONCENTRIC) MAY BE USED ON CONCRETE BLOCK STRUCTURES. THE CONE TOPS SHALL BE INSTALLED ON A BED OF MORTAR.

ECCENTRIC CONE TOPS MAY BE USED ON ALL STRUCTURES, AND CONCENTRIC CONE TOPS SHALL BE USED ONLY ON STRUCTURES 5 FEET OR LESS IN DEPTH, UNLESS OTHERWISE DIRECTED BY THE ENGINEER.

STEPS CONFORMING TO AASHTO M 199 SHALL BE INSTALLED IN ALL STRUCTURES OVER 5 FEET IN DEPTH.

SOLID ALUMINUM STEPS SHALL HAVE A MINIMUM CROSS SECTIONAL DIMENSION OF 0.75 INCH. ALUMINUM SURFACES TO BE EMBEDDED IN CONCRETE SHALL BE GIVEN ONE COAT OF SUITABLE QUALITY PAINT, SUCH AS ZINC CHROMATE PRIMER CONFORMING TO FEDERAL SPECIFICATION TT-P-645 OR EQUIVALENT.

ALL BAR STEEL REINFORCEMENT SHALL BE EMBEDDED 2 INCHES CLEAR UNLESS OTHERWISE SHOWN OR NOTED.

PRECAST REINFORCED CONCRETE RISERS MAY BE PLACED WITH TONGUE UP OR DOWN.

ALL PRECAST INLET UNITS AND MANHOLES SHALL CONFORM TO THE PERTINENT REQUIREMENTS OF AASHTO DESIGNATION M 199.

* USE 2'-0" DIAMETER OPENING WITH TYPE "C", "L" AND "J" COVERS, OR 3'-0" DIAMETER WITH TYPE "K" AND "M" COVERS.

① 2 COURSES 6" BLOCK.

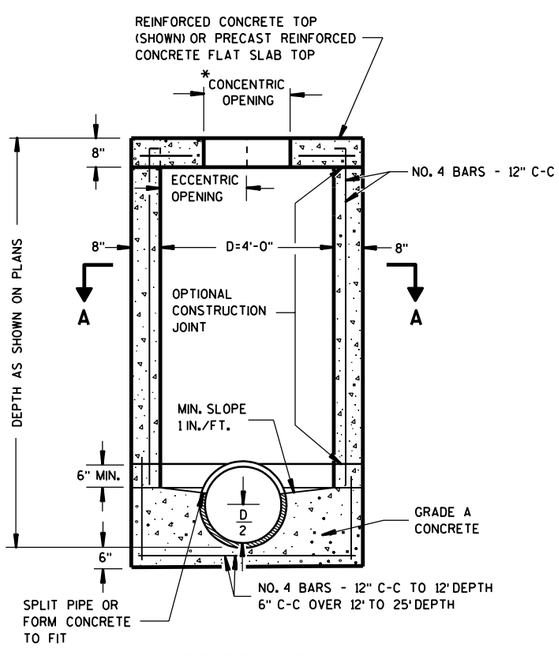

SECTION B-B
REINFORCED CONCRETE

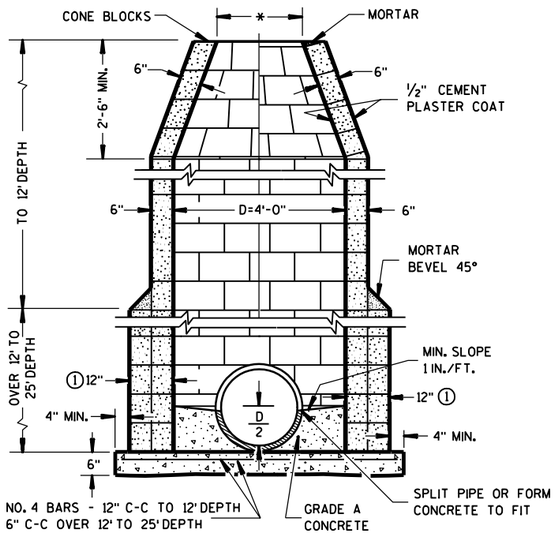

CONCRETE BLOCK

MANHOLES TYPE 1

MANHOLES TYPE 1	
STATE OF WISCONSIN DEPARTMENT OF TRANSPORTATION	
APPROVED 9/9/05 DATE FHWA	/S/ Jerry H. Zogg ROADWAY STANDARDS DEVELOPMENT ENGINEER

6

S.D.D. 8 B 6-4

6

S.D.D. 8 B 6-4

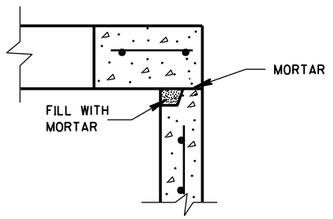

DETAIL "A"

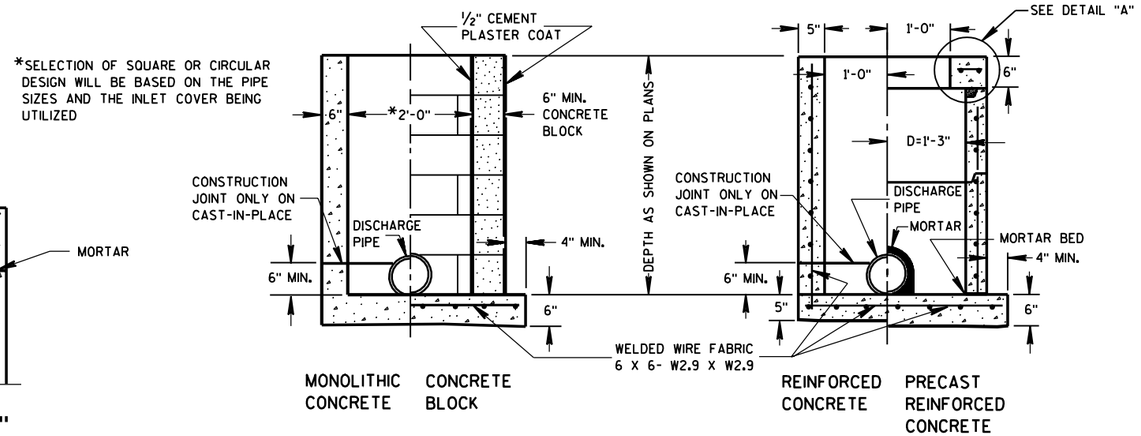

INLETS TYPE 1

GENERAL NOTES

DETAILS OF CONSTRUCTION, MATERIALS AND WORKMANSHIP NOT SHOWN ON THIS DRAWING SHALL CONFORM TO THE PERTINENT REQUIREMENTS OF THE STANDARD SPECIFICATIONS AND THE APPLICABLE SPECIAL PROVISIONS.

DETAILED DRAWINGS FOR PROPOSED ALTERNATE DESIGNS FOR UNDERGROUND DRAINAGE STRUCTURES SHALL BE SUBMITTED TO THE ENGINEER FOR APPROVAL PROVIDING THAT SUCH ALTERNATE DESIGNS MAKE PROVISION FOR EQUIVALENT CAPACITY AND STRENGTH.

ALL PRECAST INLET UNITS SHALL CONFORM TO THE PERTINENT REQUIREMENTS OF AASHTO DESIGNATION M 199.

ALL DRAINAGE STRUCTURES ARE DESIGNATED ON THE PLANS AS "MANHOLES 1-C", "CATCH BASINS 1-B", "INLETS 3-H", ETC. THE FIRST DIGIT DESIGNATES THE MASONRY PORTION OF THE STRUCTURE, AND THE FOLLOWING LETTER DESIGNATES THE TYPE OF COVER TO BE USED TO COMPRISE THE COMPLETE UNIT.

PRECAST REINFORCED BASES SHALL BE PLACED ON A BED OF MATERIAL AT LEAST 6 INCHES IN DEPTH, WHICH MEETS THE REQUIREMENTS OF GRANULAR BACKFILL. THIS BEDDING SHALL BE COMPACTED AND PROVIDE UNIFORM SUPPORT FOR THE ENTIRE AREA OF THE BASE.

PRECAST REINFORCED CONCRETE FLAT SLAB TOPS MAY BE USED ON THE STRUCTURES. THE TOPS SHALL BE INSTALLED ON A BED OF MORTAR.

ALL BAR STEEL REINFORCEMENT SHALL BE EMBEDDED 2 INCHES CLEAR UNLESS OTHERWISE SHOWN OR NOTED.

PRECAST REINFORCED CONCRETE RISERS SHALL BE PLACED WITH TONGUE DOWN.

(1) USE 2'-6" OPENING FOR TYPE 2 INLETS, 3'-0" OPENING FOR TYPE 3 INLETS, AND 2'-11" FOR TYPE 4 INLETS.

(2) USE 2'-0" OPENING FOR TYPE 1, 2 & 3 INLETS, 2'-6½" OPENING FOR TYPE 4 INLETS.

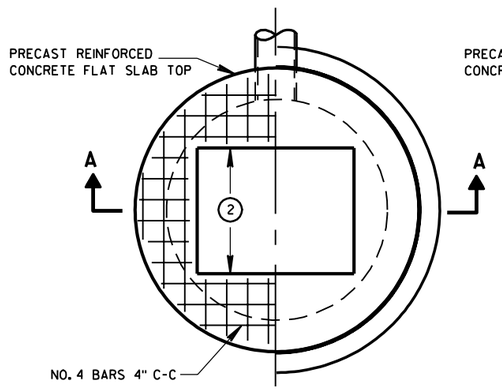

PLAN VIEW

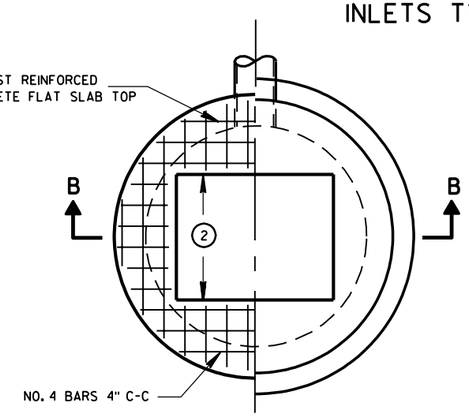

PLAN VIEW

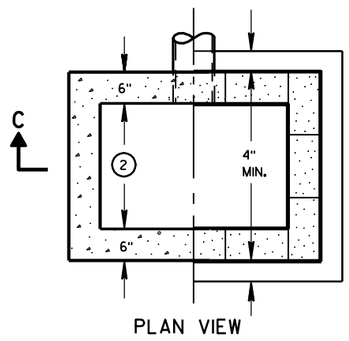

PLAN VIEW

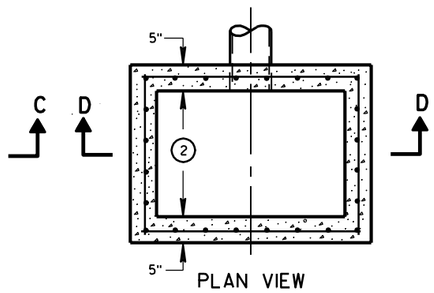

PLAN VIEW

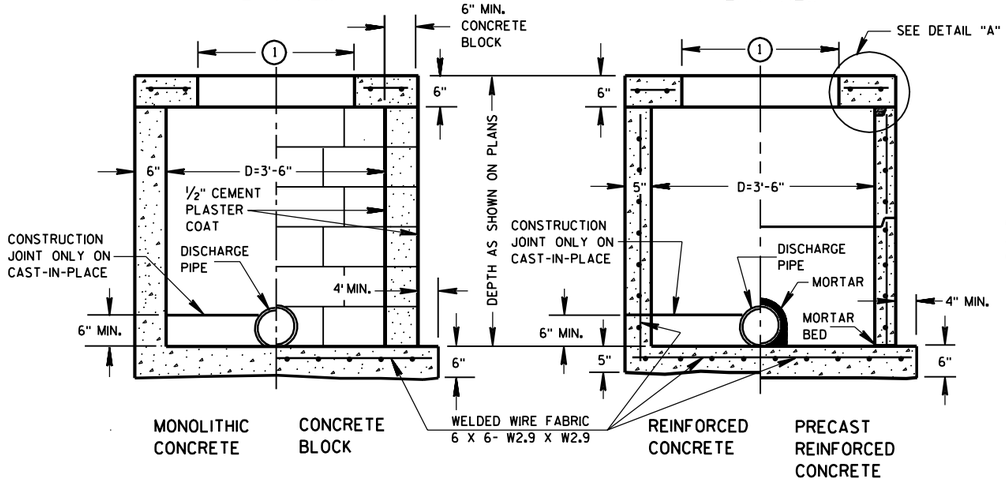

SECTION A-A

SECTION B-B

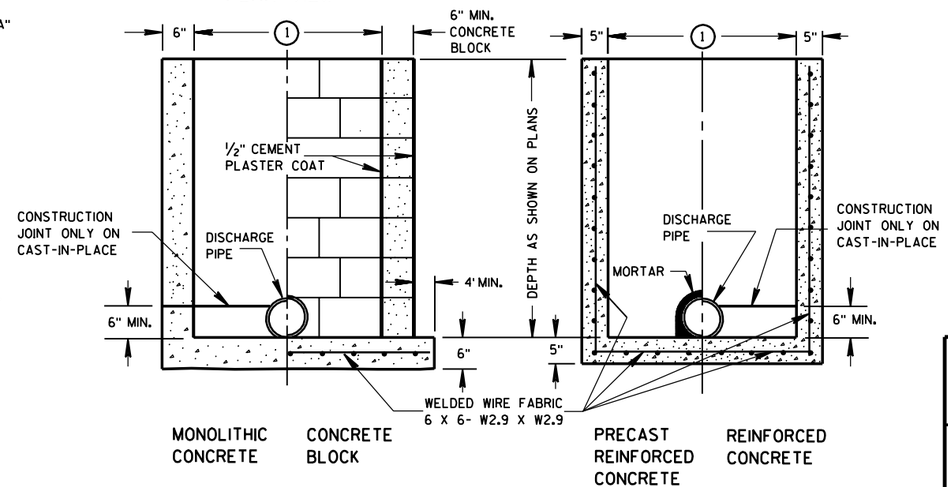

SECTION C-C

SECTION D-D

INLETS TYPE 2, 3 & 4

INLETS TYPE 1, 2, 3 & 4

STATE OF WISCONSIN
DEPARTMENT OF TRANSPORTATION

APPROVED
8/26/94
DATE
FHWA

CHIEF ROADWAY DEVELOPMENT ENGINEER

S.D.D. 8 C 1-5

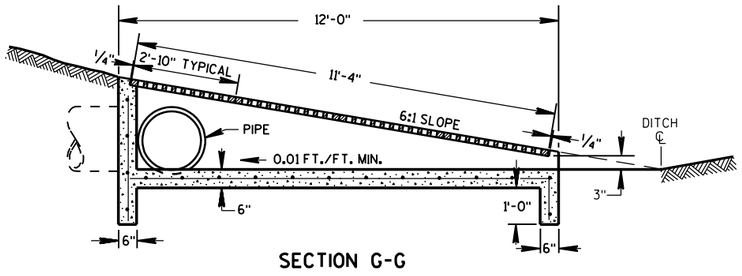

SECTION G-G

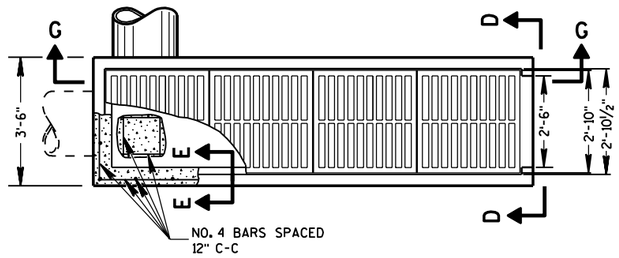

PLAN VIEW

REINFORCED CONCRETE INLET TYPE 11

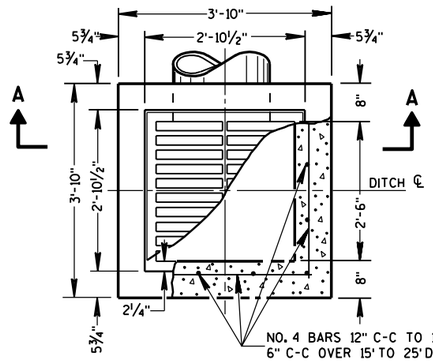

PLAN VIEW

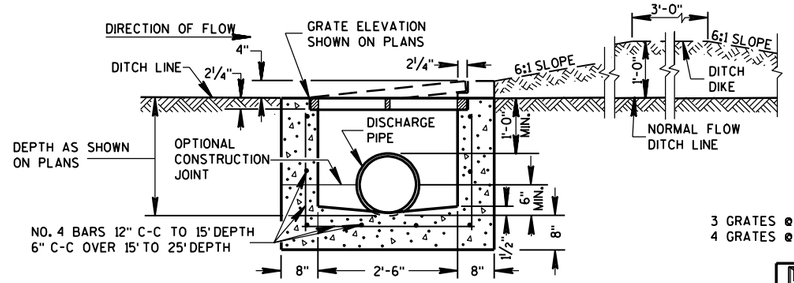

SECTION A-A

REINFORCED CONCRETE INLET TYPE 8

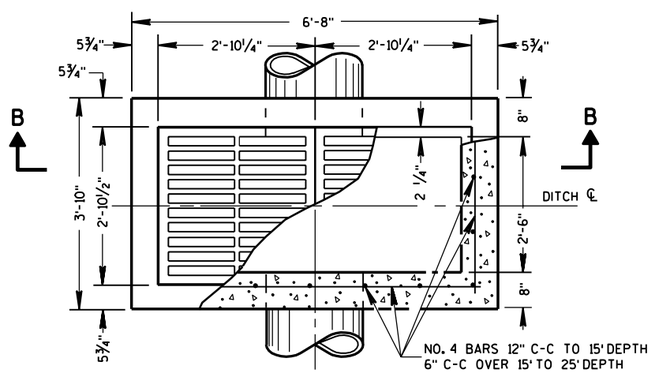

PLAN VIEW

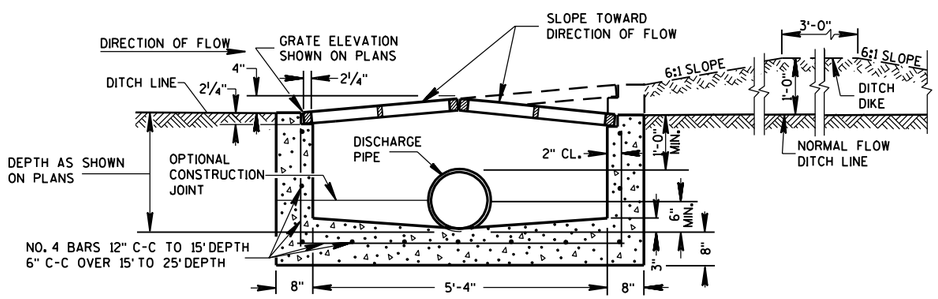

SECTION B-B

REINFORCED CONCRETE INLET TYPE 9

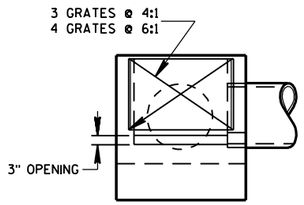

SECTION D-D

GENERAL NOTES

DETAILS OF CONSTRUCTION, MATERIALS AND WORKMANSHIP NOT SHOWN ON THIS DRAWING SHALL CONFORM TO THE PERTINENT REQUIREMENTS OF THE STANDARD SPECIFICATIONS AND THE APPLICABLE SPECIAL PROVISIONS.

DETAILED DRAWINGS FOR PROPOSED ALTERNATE DESIGNS FOR INLETS WHICH MAY INCLUDE PRECAST REINFORCED CONCRETE INLETS, SHALL BE SUBMITTED TO THE ENGINEER FOR APPROVAL PROVIDING THAT SUCH ALTERNATE DESIGNS MAKE PROVISION FOR EQUIVALENT CAPACITY AND STRENGTH.

PRECAST REINFORCED CONCRETE INLET UNITS, IF USED, SHALL CONFORM TO THE REQUIREMENTS OF THE CATCH BASINS, MANHOLES AND INLETS SECTION OF THE STANDARD SPECIFICATIONS. UNLESS OTHERWISE AUTHORIZED IN WRITING BY THE ENGINEER, THE CONTRACTOR SHALL NOT ORDER AND DELIVER PRECAST INLET UNITS REQUIRED FOR THE PROJECT UNTIL A CORRECTED LIST OF SIZES IS FURNISHED BY THE ENGINEER.

ALL INLETS ARE DESIGNATED ON THE PLANS AS "INLETS, 8-MS", ETC. THIS DESIGNATION IS INTERPRETED TO MEAN THAT THE NUMBER, OR FIRST DIGIT DESIGNATES THE MASONRY PORTION OF THE STRUCTURE AND THE FOLLOWING LETTER DESIGNATES THE TYPE OF COVER OR IRON CASTING TO BE USED THEREWITH TO COMPRISE THE COMPLETE UNIT.

ALL BAR STEEL REINFORCEMENT SHALL BE EMBEDDED 2 INCHES CLEAR UNLESS OTHERWISE SHOWN OR NOTED.

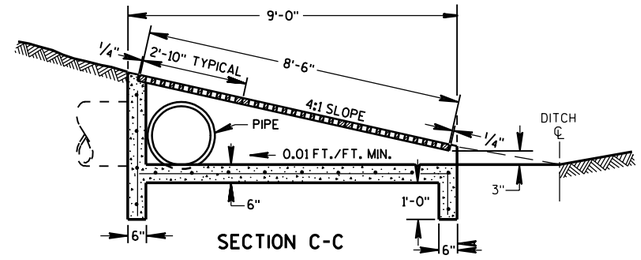

SECTION C-C

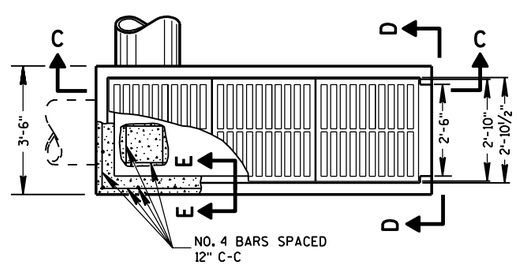

PLAN VIEW

REINFORCED CONCRETE INLET TYPE 10

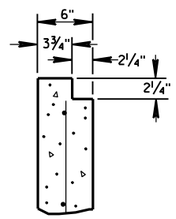

SECTION E-E

INLETS TYPE 8, 9, 10 AND 11

STATE OF WISCONSIN
DEPARTMENT OF TRANSPORTATION

APPROVED
8/10/94
DATE

CHIEF ROADWAY DEVELOPMENT ENGINEER

FHWA

S.D.D. 8 C 5-2

6

S.D.D. 8 C 5-2

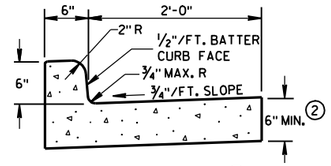

TYPES A & D ①

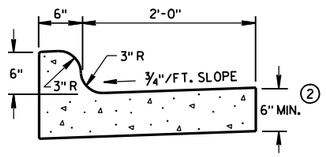

TYPES K & L ①

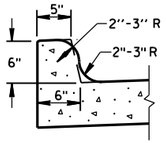

OPTIONAL CURB SHAPE FOR TYPES K & L ①

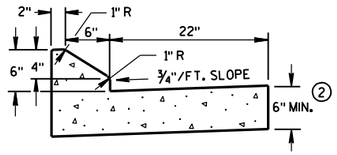

6" SLOPED CURB TYPES G & J ①

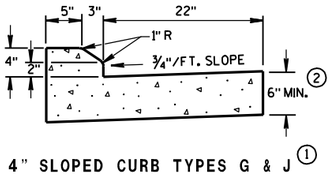

4" SLOPED CURB TYPES G & J ①

CONCRETE CURB & GUTTER 30"

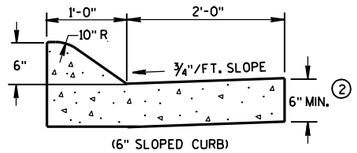

(6" SLOPED CURB)

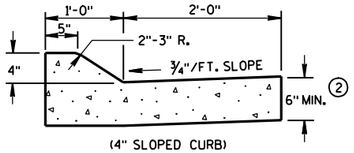

(4" SLOPED CURB)

TYPES A & D ①

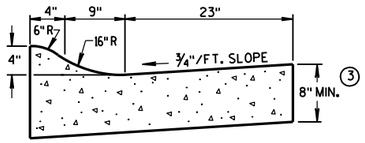

4" SLOPED CURB TYPES R & T ①④

CONCRETE CURB & GUTTER 36"

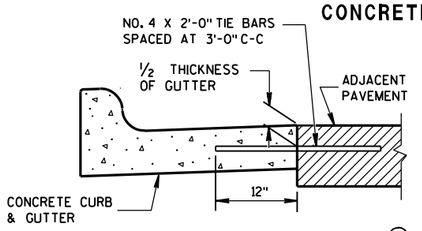

TYPICAL TIE BAR LOCATION ①

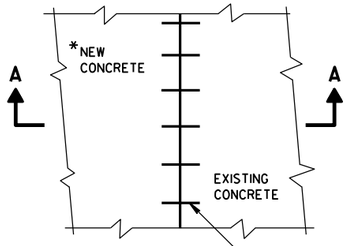

*NEW CURB & GUTTER, SURFACE DRAINS, CONCRETE PAVEMENT OR OTHER NEW CONCRETE.

PLAN VIEW

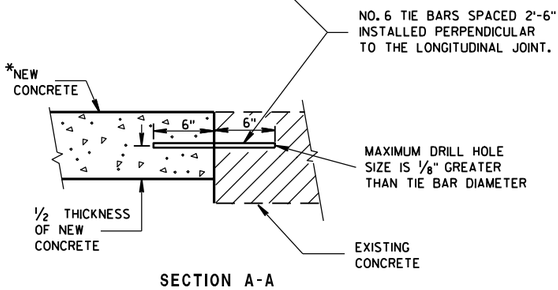

SECTION A-A

TIE BARS DRILLED INTO EXISTING PAVEMENT

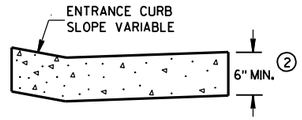

DRIVEWAY ENTRANCE CURB
(WHEN DIRECTED BY THE ENGINEER)

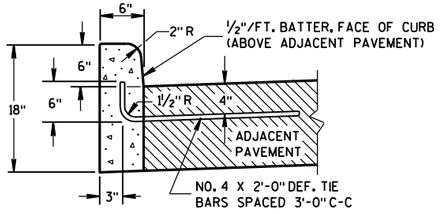

① TYPES A & D

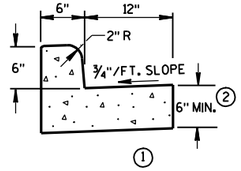

① TYPES A & D

CONCRETE CURB & GUTTER 18"

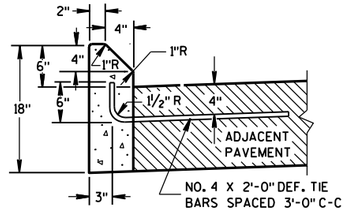

① TYPES G & J

CONCRETE CURB

GENERAL NOTES

DETAILS OF CONSTRUCTION, MATERIALS AND WORKMANSHIP NOT SHOWN ON THIS DRAWING SHALL CONFORM TO THE PERTINENT REQUIREMENTS OF THE CONTRACT.

PAVEMENT TIES AND TIE BARS SHALL BE EPOXY COATED IN CONFORMANCE WITH SUBSECTION 505.2.6.2 OF THE STANDARD SPECIFICATIONS.

INTEGRAL CURB & GUTTER SHALL CONFORM TO THE DETAILS SHOWN FOR CONCRETE CURB & GUTTER INCLUDING THE TRANSVERSE GUTTER SLOPE. A LONGITUDINAL CONSTRUCTION JOINT IS NOT REQUIRED WITH INTEGRAL CURB AND GUTTER.

WHERE THE TRANSVERSE JOINTS IN THE PAVEMENT ARE REQUIRED TO BE SEALED, THE JOINTS IN THE INTEGRAL CURB AND GUTTER SHALL BE SEALED TO THE FACE OF CURB WITH THE SAME TYPE OF SEALANT. THE COST OF FURNISHING AND INSTALLING THIS SEALANT SHALL BE INCIDENTAL TO THE ITEM CONCRETE CURB AND GUTTER.

UNLESS OTHERWISE SHOWN ON THE TYPICAL CROSS SECTIONS, THE BASE AGGREGATE AND COMMON EXCAVATION LIMITS ARE 2'-0" BEHIND THE BACK OF CURBS.

① TIE BARS ARE REQUIRED FOR CURB AND GUTTER TYPES A, G, K AND R.

② THE BOTTOM OF CURB AND GUTTER MAY BE CONSTRUCTED EITHER LEVEL OR PARALLEL TO THE SLOPE OF THE SUBGRADE OR BASE AGGREGATE PROVIDED A 6" MINIMUM GUTTER THICKNESS IS MAINTAINED.

③ THE BOTTOM OF CURB AND GUTTER MAY BE CONSTRUCTED EITHER LEVEL OR PARALLEL TO THE SLOPE OF THE SUBGRADE OR BASE AGGREGATE PROVIDED A 8" MINIMUM GUTTER THICKNESS IS MAINTAINED.

④ THE FACE OF CURB IS 6" FROM THE BACK OF CURB.

⑤ WHEN REVERSE SLOPE GUTTER IS REQUIRED, THE LOCATION(S) WILL BE SHOWN ELSEWHERE IN THE PLAN.

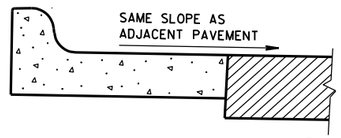

REVERSE SLOPE GUTTER ⑤
(TYPICAL FOR ALL CURB & GUTTER TYPES)

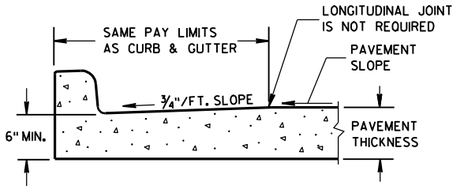

PARTIAL SECTION OF PAVEMENT WITH INTEGRAL CURB & GUTTER

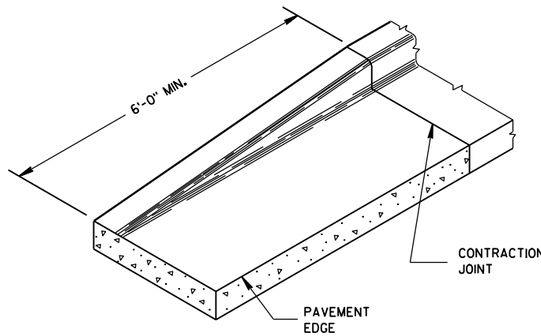

END SECTION CURB & GUTTER

CONCRETE CURB, CONCRETE CURB & GUTTER AND TIES

STATE OF WISCONSIN
DEPARTMENT OF TRANSPORTATION

APPROVED
9/4/08 DATE
/S/ Jerry H. Zogg
ROADWAY STANDARDS DEVELOPMENT ENGINEER
FHWA

6

S.D.D. 8 D 1-17

ASPHALTIC FLUME

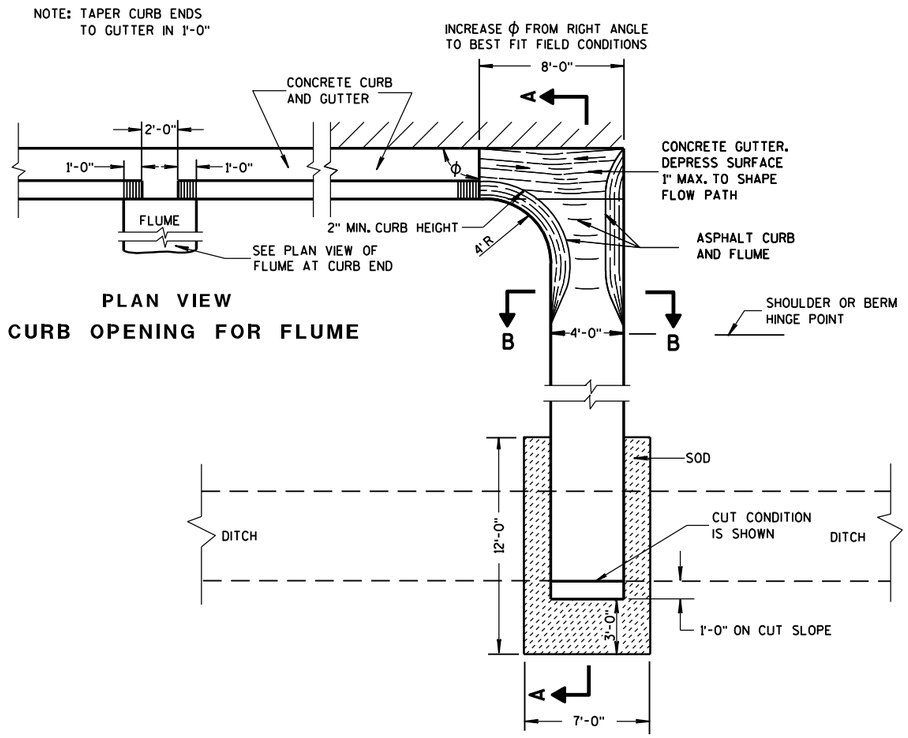

PLAN VIEW
CURB OPENING FOR FLUME

PLAN VIEW
FLUME AT CURB END

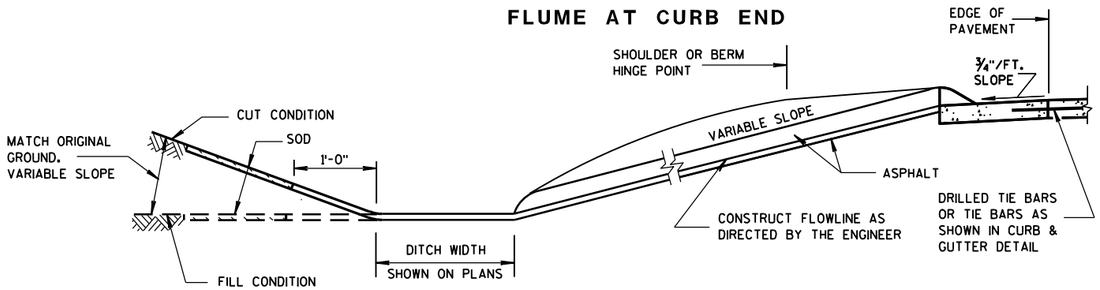

SECTION A-A

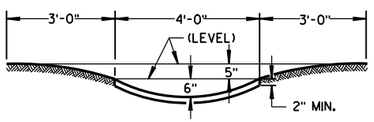

SECTION B-B

GENERAL NOTES

DETAILS OF CONSTRUCTION, MATERIALS AND WORKMANSHIP NOT SHOWN ON THIS DRAWING SHALL CONFORM TO PERTINENT REQUIREMENTS OF THE STANDARD SPECIFICATIONS AND APPLICABLE SPECIAL PROVISIONS.

WELDED STEEL WIRE FABRIC SHALL BE IN ACCORDANCE WITH AASHTO SPECIFICATION M55.

① JOINTS SHALL BE ⅛ TO ¼ INCH WIDE BY 1½ INCHES DEEP AND SPACED AT UNIFORM INTERVALS OF APPROXIMATELY 4 FEET.

② GEOTEXTILE FABRIC TYPE "R" SHALL UNDERLAY THE FULL LENGTH AND WIDTH OF THE CONCRETE SURFACE DRAIN AND RIPRAP.

③ CONCRETE SURFACE DRAIN WITHOUT CURB AND GUTTER MAY BE USED ON BACKSLOPES WHEN SPECIFIED

③ CONCRETE SURFACE DRAIN

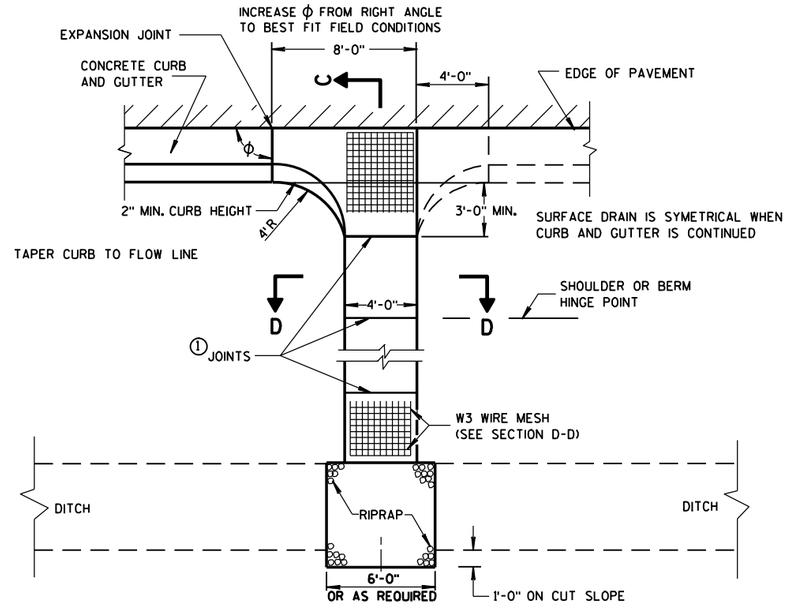

PLAN VIEW

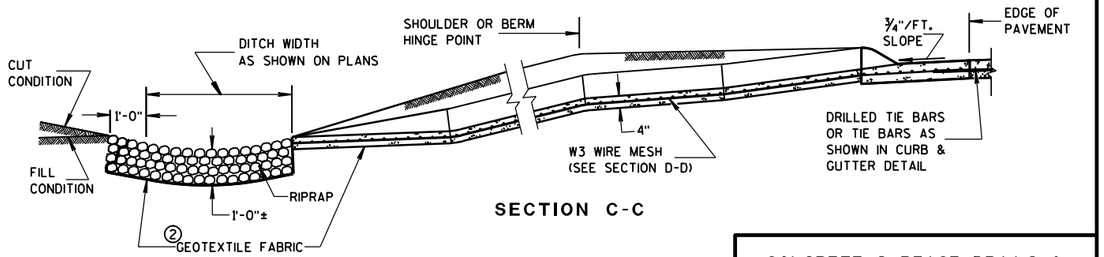

SECTION C-C

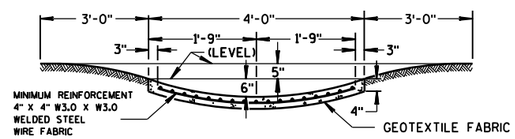

SECTION D-D

CONCRETE SURFACE DRAINS & ASPHALTIC FLUMES

STATE OF WISCONSIN
DEPARTMENT OF TRANSPORTATION

APPROVED

9-4-08
DATE

/S/ Jerry H. Zogg
ROADWAY STANDARDS DEVELOPMENT ENGINEER

FHWA

6

S.D.D. 8 D 4-5

6

S.D.D. 8 D 4-5

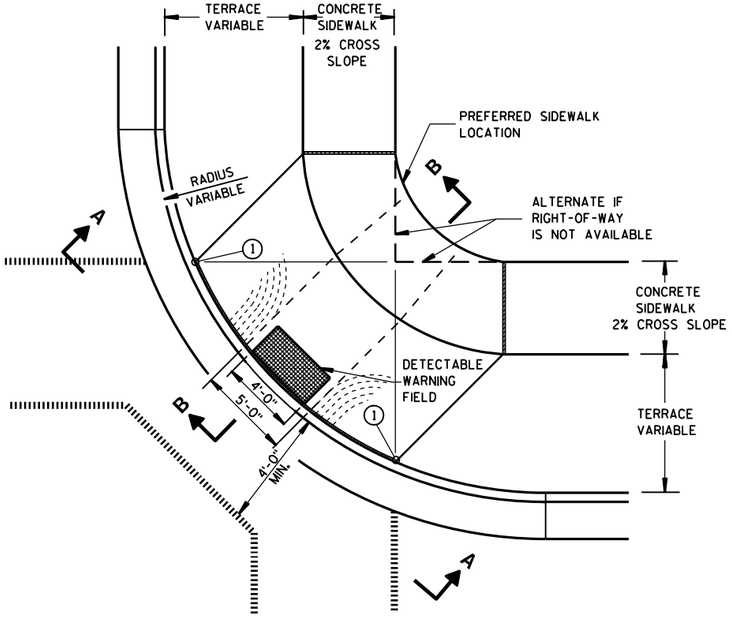

PLAN VIEW

TYPE 1 RAMP

(CENTER OF CORNER RADIUS)

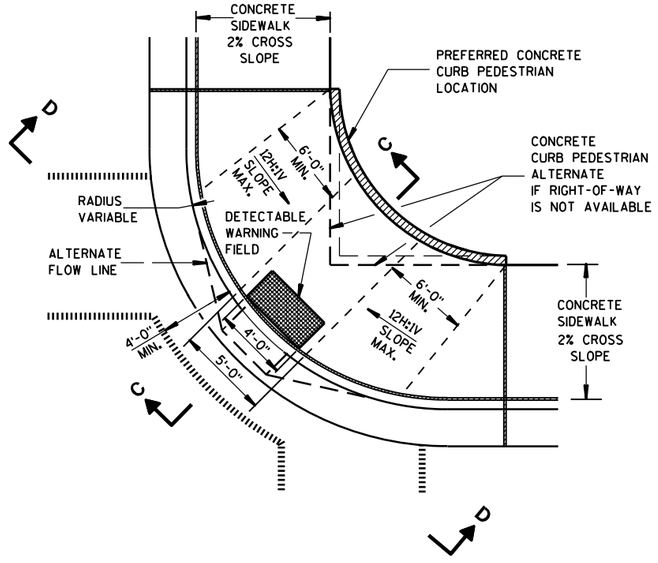

PLAN VIEW

TYPE 1-A RAMP

(NO TERRACE)

GENERAL NOTES

DETAILS OF CONSTRUCTION, MATERIALS AND WORKMANSHIP NOT SHOWN ON THIS DRAWING SHALL CONFORM TO THE PERTINENT REQUIREMENTS OF THE STANDARD SPECIFICATIONS AND THE APPLICABLE SPECIAL PROVISIONS.

RAMPS SHALL BE BUILT AT 12H:1V OR FLATTER. WHEN NECESSARY, THE SIDEWALK ELEVATION MAY BE LOWERED TO MEET THE HIGH POINT ON THE RAMP.

TYPE 1 RAMPS SHALL HAVE A NORMAL SIDEWALK APRON AND CURB ON BOTH SIDES OF RAMP.

DETECTABLE WARNING FIELD SHALL BE MEASURED AND PAID BY THE SQUARE FOOT AS "CURB RAMP DETECTABLE WARNING FIELD". THE CONCRETE PEDESTRIAN CURB, IF NEEDED, SHALL BE MEASURED AND PAID BY THE LINEAL FOOT AS "CONCRETE CURB PEDESTRIAN". CONCRETE SIDEWALK IN THE CURB RAMP AREA SHALL BE MEASURED AND PAID BY THE SQUARE FOOT AS CONCRETE SIDEWALK, INCLUDING THE AREA UNDER THE DETECTABLE WARNING FIELD.

SELECT CURB RAMP DETECTABLE WARNING FIELD MATERIALS AND DEVICES FROM THE DEPARTMENT'S APPROVED MATERIALS LIST. THE COLOR OF THE DETECTABLE WARNING FIELD IS SPECIFIED ELSEWHERE AND IS INCIDENTAL TO THE BID ITEM OF "CURB RAMP DETECTABLE WARNING FIELD".

SURFACE TEXTURE OF THE RAMP SHALL BE OBTAINED BY COARSE BROOMING TRANSVERSE TO THE SLOPE OF THE RAMP.

(1) THIS POINT IS AN EXTENSION OF OUTSIDE EDGE OF APPROACHING SIDEWALK WHERE IT MEETS THE BACK OF CONCRETE CURB.

(2) GRADE CHANGE BETWEEN GUTTER FLAG SLOPE AND THE CURB RAMP SLOPE SHALL NOT EXCEED 11%. PROVIDE DRAINAGE AWAY FROM CURB RAMP AT GUTTER FLAG INTERFACE.

LEGEND

- ½" EXPANSION JOINT-SIDEWALK
- CONTRACTION JOINT FIELD LOCATED
- PAVEMENT MARKING CROSSWALK (WHITE)
- ALTERNATIVE LAYOUT

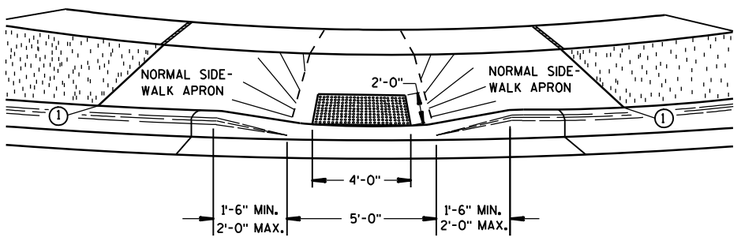

VIEW A-A

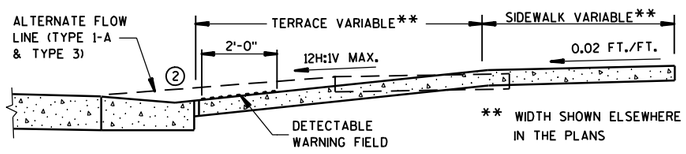

SECTION B-B

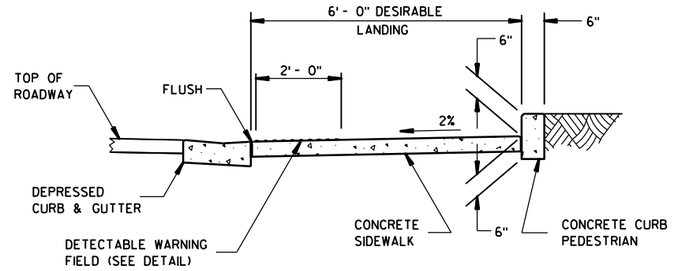

SECTION C-C

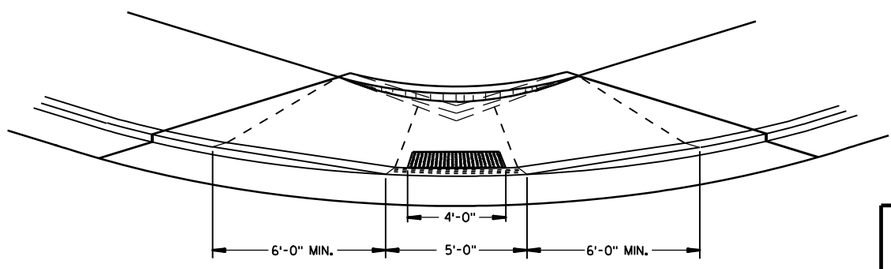

VIEW D-D

CURB RAMPS TYPES 1 AND 1-A

STATE OF WISCONSIN
DEPARTMENT OF TRANSPORTATION

6

S.D.D. 8 D 5-14a

6

S.D.D. 8 D 5-14a

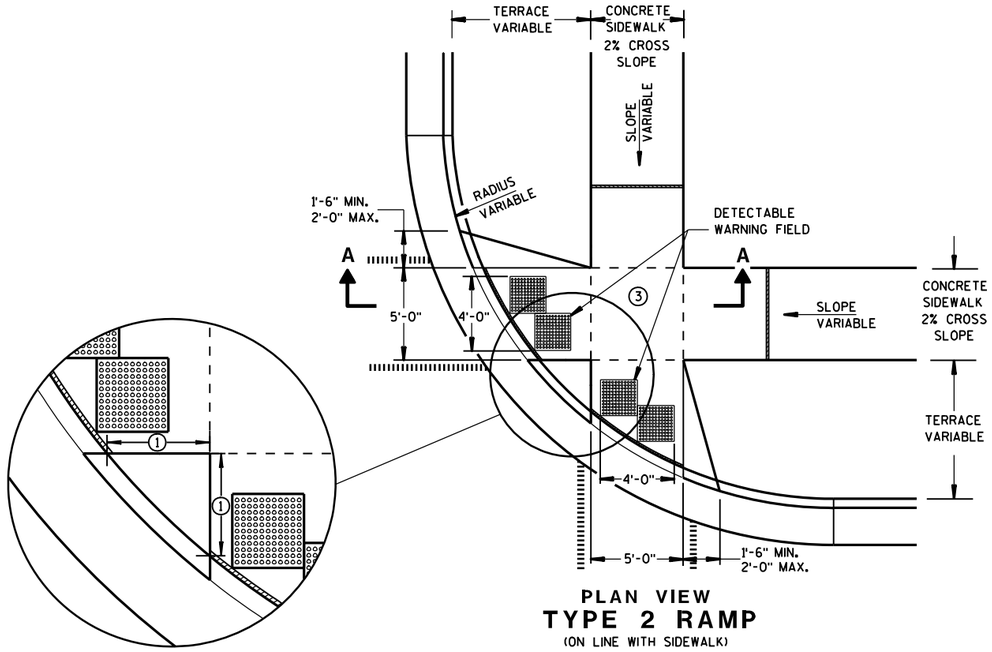

PLAN VIEW
TYPE 2 RAMP
(ON LINE WITH SIDEWALK)

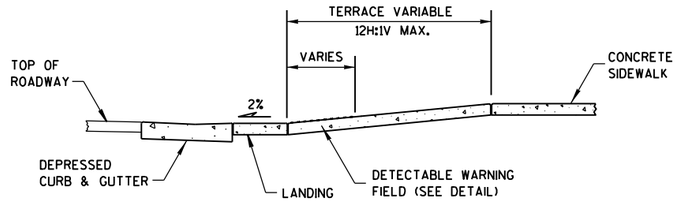

SECTION A-A

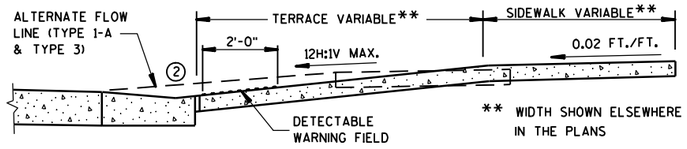

SECTION B-B

GENERAL NOTES

USE THE TYPE 3 RAMP ONLY WHEN A TYPE 1 OR TYPE 2 CANNOT BE ACHIEVED BECAUSE OF FIELD CONDITIONS.

(1) WHEN THIS DISTANCE IS LESS THAN 6'-0" IT MAY BE DIFFICULT TO ACHIEVE A 12H:1V SLOPE, OR FLATTER, ON THE RAMP. REDUCE CURB HEIGHT IN TRIANGLE AREA TO ACHIEVE 12H:1V SLOPE, OR FLATTER, ON RAMP. 2" MINIMUM CURB HEIGHT.

(2) GRADE CHANGE BETWEEN GUTTER FLAG SLOPE AND THE CURB RAMP SLOPE SHALL NOT EXCEED 11%. PROVIDE DRAINAGE AWAY FROM CURB RAMP AT GUTTER FLAG INTERFACE.

(3) PROVIDE LANDING AT TOP OF RAMP WITH NO MORE THAN 2% SLOPE IN ANY DIRECTION.

LEGEND

- ½" EXPANSION JOINT-SIDEWALK
- CONTRACTION JOINT FIELD LOCATED
- PAVEMENT MARKING CROSSWALK (WHITE)
- ALTERNATIVE LAYOUT

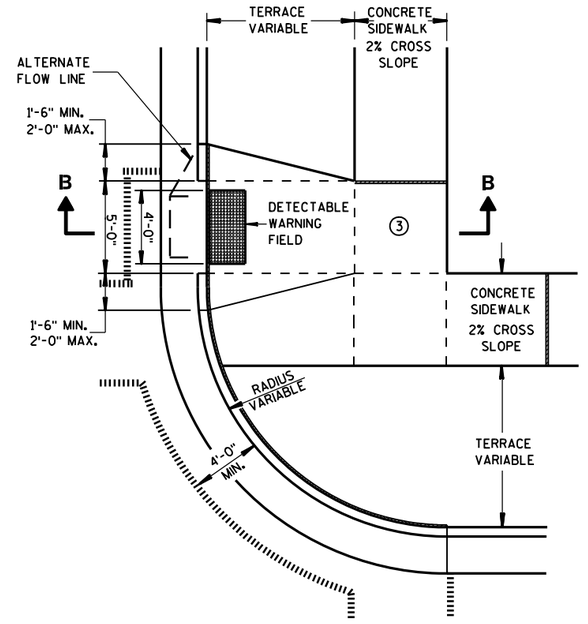

PLAN VIEW
TYPE 3 RAMP
(OUTSIDE OF CROSSWALK AREA)

CURB RAMPS
TYPES 2 AND 3

STATE OF WISCONSIN
DEPARTMENT OF TRANSPORTATION

6

S.D.D. 8 D 5-14b

6

S.D.D. 8 D 5-14b

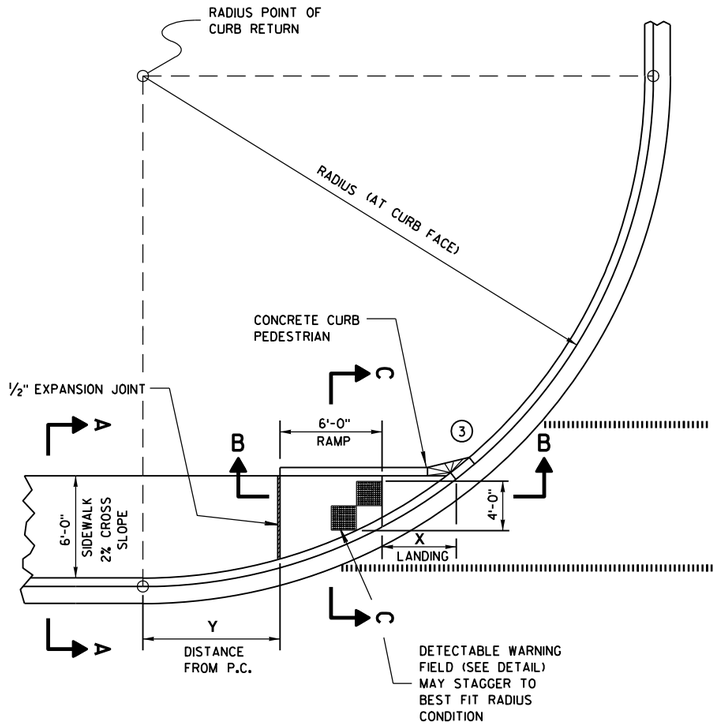

CURB RAMP TYPE 4A
PLAN VIEW

RADIUS (AT CURB FACE)	X	Y
20 FEET	6'-1¾"	2'-7¼"
30 FEET	7'-11¾"	4'-8¼"
40 FEET	9'-5¼"	6'-5"
50 FEET	10'-8¾"	7'-11¼"
60 FEET	11'-10¼"	9'-3½"

INTERMEDIATE RADII CAN BE INTERPOLATED

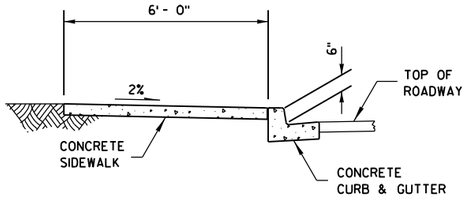

SECTION A-A

GENERAL NOTES

AVOID PLACING DRAINAGE STRUCTURES, JUNCTION BOXES OR OTHER OBSTRUCTIONS IN FRONT OF RAMP ACCESS AREAS.

RAMP SLOPES SHALL NOT BE STEEPER THAN 12:1.

SIDEWALK CROSS SLOPE SHALL NOT EXCEED 2%.

(3) INSTALL TRANSITION NOSE. (INCIDENTAL TO OTHER PAY ITEMS.) DO NOT MARK TRANSITION NOSE.

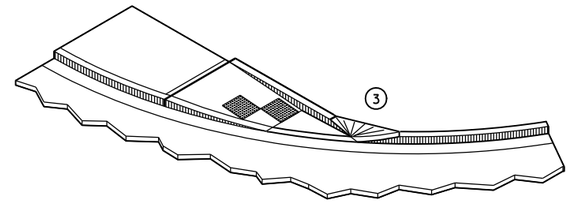

ISOMETRIC VIEW

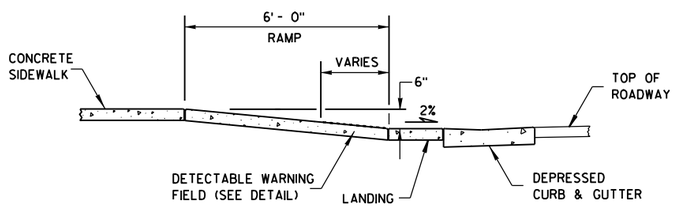

SECTION B-B

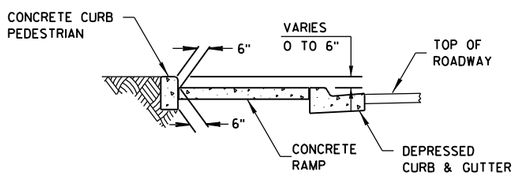

SECTION C-C

LEGEND

½" EXPANSION JOINT-SIDEWALK

CONTRACTION JOINT FIELD LOCATED

PAVEMENT MARKING CROSSWALK (WHITE)

CURB RAMPS
TYPE 4A

STATE OF WISCONSIN
DEPARTMENT OF TRANSPORTATION

6

S.D.D. 8 D 5-14c

6

S.D.D. 8 D 5-14c

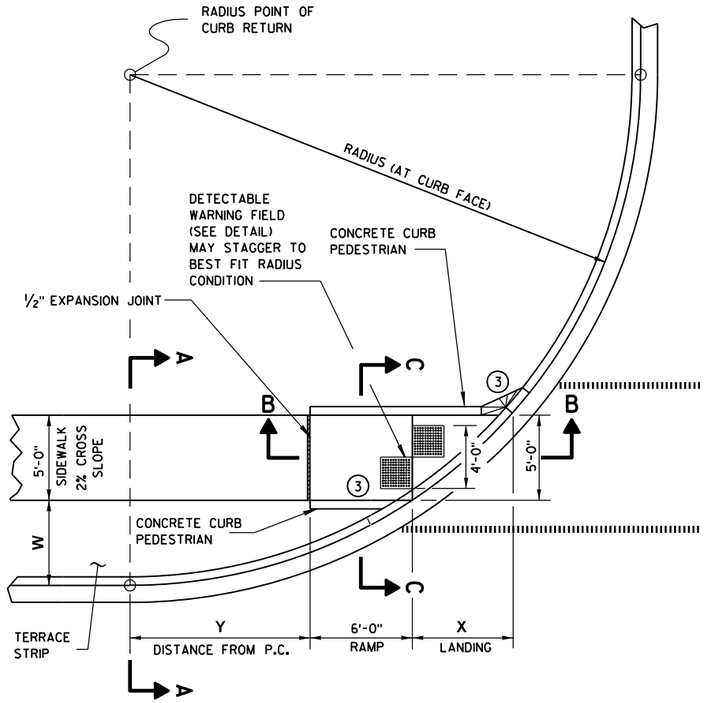

CURB RAMP TYPE 4B
PLAN VIEW

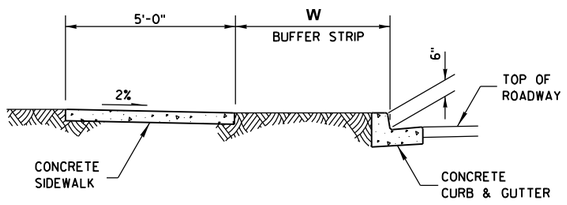

SECTION A-A

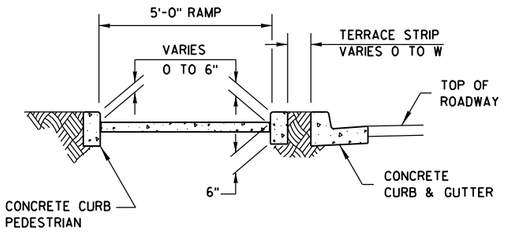

SECTION C-C

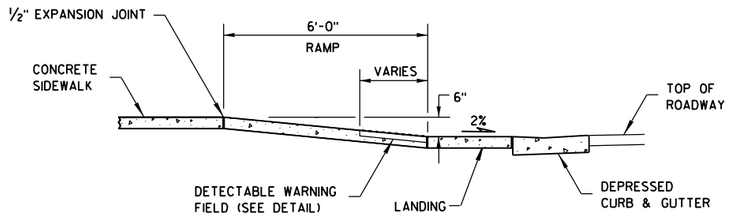

SECTION B-B

GENERAL NOTES

AVOID PLACING DRAINAGE STRUCTURES, JUNCTION BOXES OR OTHER OBSTRUCTIONS IN FRONT OF RAMP ACCESS AREAS.

RAMP SLOPES SHALL NOT BE STEEPER THAN 12:1.

SIDEWALK CROSS SLOPE SHALL NOT EXCEED 2%.

(3) INSTALL TRANSITION NOSE. (INCIDENTAL TO OTHER PAY ITEMS.) DO NOT MARK TRANSITION NOSE.

RADIUS (AT CURB FACE)	W = 3'-0"		W = 4'-0"		W = 5'-0"		W = 6'-0"		W = 7'-0"	
	X	Y	X	Y	X	Y	X	Y	X	Y
20 FEET	5'-5½"	4'-6½"	4'-8½"	6'-0"	4'-1"	7'-2¾"	3'-7"	8'-3½"	3'-1½"	9'-2½"
30 FEET	7'-3¾"	7'-1"	6'-5½"	8'-11½"	5'-9¼"	10'-7"	5'-2½"	12'-0"	4'-8¾"	13'-3¼"
40 FEET	8'-9½"	9'-2½"	7'-10"	11'-5¼"	7'-1"	13'-4½"	6'-5¾"	15'-¾"	5'-11½"	16'-7¼"
50 FEET	10'-¾"	11'-¾"	9'-¼"	13'-7¼"	8'-2½"	15'-9½"	7'-6½"	17'-9"	6'-11¾"	19'-6¼"
60 FEET	11'-2½"	12'-8¾"	10'-¾"	15'-6½"	9'-2¼"	17'-11¾"	8'-5¾"	20'-1¾"	7'-10½"	22'-1½"
70 FEET	12'-2¾"	14'-3¼"	11'-¼"	17'-4"	10'-1"	19'-11¾"	9'-3¾"	22'-4¼"	8'-8¼"	24'-6¼"
80 FEET	13'-2"	15'-8½"	11'-10½"	18'-11¾"	10'-10¾"	21'-10"	10'-1"	24'-4¾"	9'-5"	26'-8¾"
90 FEET	14'- ½"	17'-½"	12'-8¼"	20'-6½"	11'-7¾"	23'-7"	10'-9¾"	26'-3¾"	10'-1¼"	28'-9½"
100 FEET	14'-10½"	18'-3¾"	13'-5½"	22'-0"	12'-4¼"	25'-2¾"	11'-5¾"	28'-1½"	10'-9"	30'-9"

INTERMEDIATE RADII CAN BE INTERPOLATED

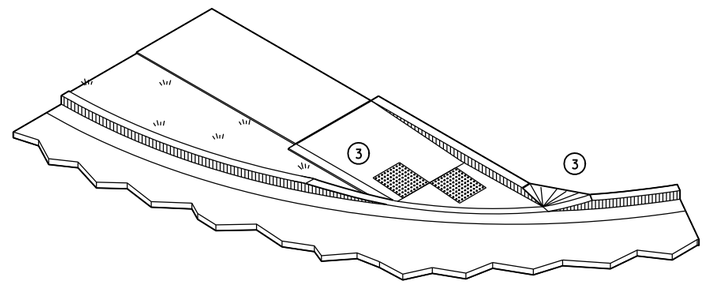

ISOMETRIC VIEW

LEGEND

- ½" EXPANSION JOINT-SIDEWALK
- CONTRACTION JOINT FIELD LOCATED
- PAVEMENT MARKING CROSSWALK (WHITE)

CURB RAMPS TYPE 4B

STATE OF WISCONSIN
DEPARTMENT OF TRANSPORTATION

6

S.D.D. 8 D 5-14d

6

S.D.D. 8 D 5-14d

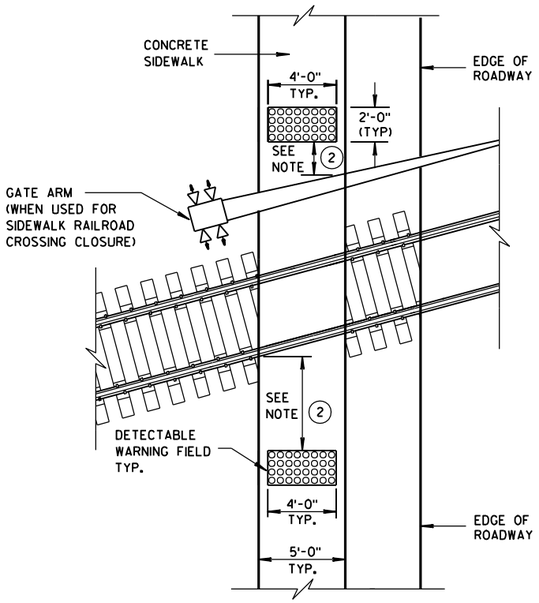

TYPE 8
DETECTABLE WARNINGS AT RAILROAD CROSSING

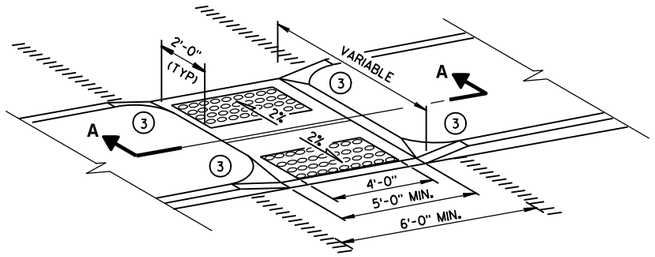

MEDIAN ISLAND
NON-ELEVATED CROSSING
TYPE 5

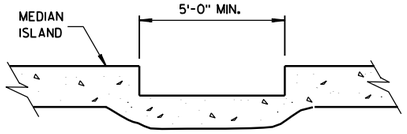

SECTION A-A

GENERAL NOTES

SIDEWALK CROSS SLOPE SHALL NOT EXCEED 2%.

(1) SLOPE SIDEWALK TOWARD LANDING AS SHOWN WHERE THERE IS NO TERRACE OR WHERE THE TERRACE WIDTH IS LESS THAN 6 FEET WIDE.

(2) THE EDGE OF THE DETECTABLE WARNING FIELD NEAREST TO A RAILROAD CROSSING SHALL BE 1.5 FEET ± 0.1' FROM THE FACE OF THE GATE ARM IF THE GATE ARM EXTENDS ACROSS THE SIDEWALK. WHERE THERE IS NO PEDESTRIAN GATE, THE EDGE OF THE DETECTABLE WARNING FIELD NEAREST TO THE RAILROAD CROSSING SHALL BE 15 FEET FROM THE NEAREST RAIL.

(3) INSTALL TRANSITION NOSE. (INCIDENTAL TO OTHER PAY ITEMS.) DO NOT MARK TRANSITION NOSE.

LEGEND

½" EXPANSION JOINT-SIDEWALK

CONTRACTION JOINT FIELD LOCATED

PAVEMENT MARKING CROSSWALK (WHITE)

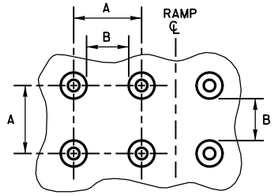

PLAN VIEW

	MIN.	MAX.
A	1.6"	2.4"
B	0.65"	1.5"
C	*	*
D	0.9"	1.4"

* THE C DIMENSION IS 50% TO 65% OF THE D DIMENSION.

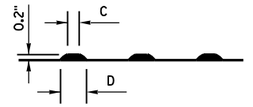

ELEVATION VIEW

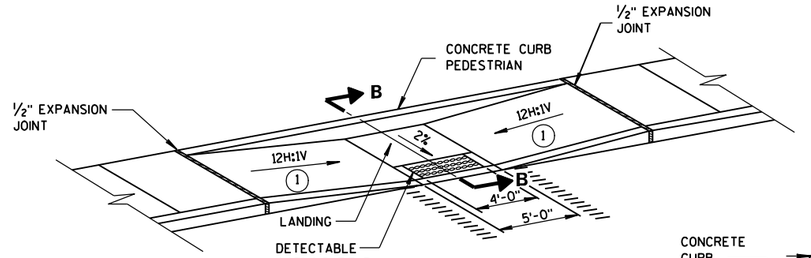

MID-BLOCK CROSSING
TYPE 7A

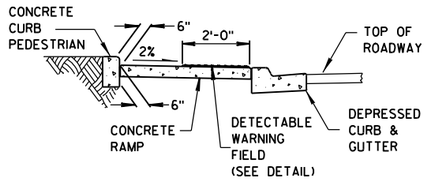

SECTION B-B

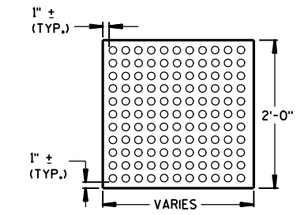

PLAN VIEW

TRUNCATED DOMES
DETECTABLE WARNING PATTERN DETAIL

DETECTABLE WARNING FIELD (TYPICAL)

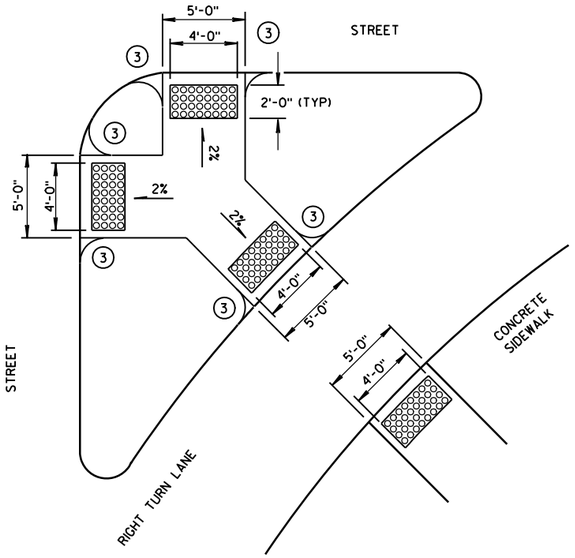

TYPE 6
DETECTABLE WARNING AT ISLANDS

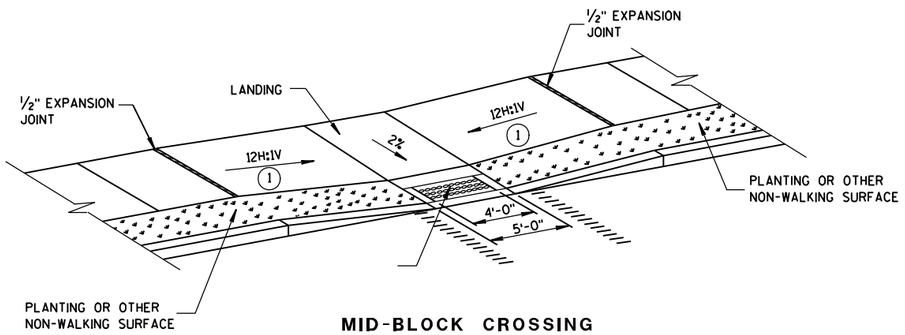

MID-BLOCK CROSSING
TYPE 7B

NOTE: THESE PARALLEL AND PARALLEL/PERPENDICULAR CURB RAMPS MAY BE USED AT INTERSECTIONS AND MID BLOCK LOCATIONS.

CURB RAMPS
TYPES 5, 6, 7A, 7B & 8

STATE OF WISCONSIN
DEPARTMENT OF TRANSPORTATION

APPROVED

2-9-10 — DATE — FHWA

/S/ Jerry H. Zogg — ROADWAY STANDARDS DEVELOPMENT ENGINEER

6

S.D.D. 8 D 5-14e

6

S.D.D. 8 D 5-14e

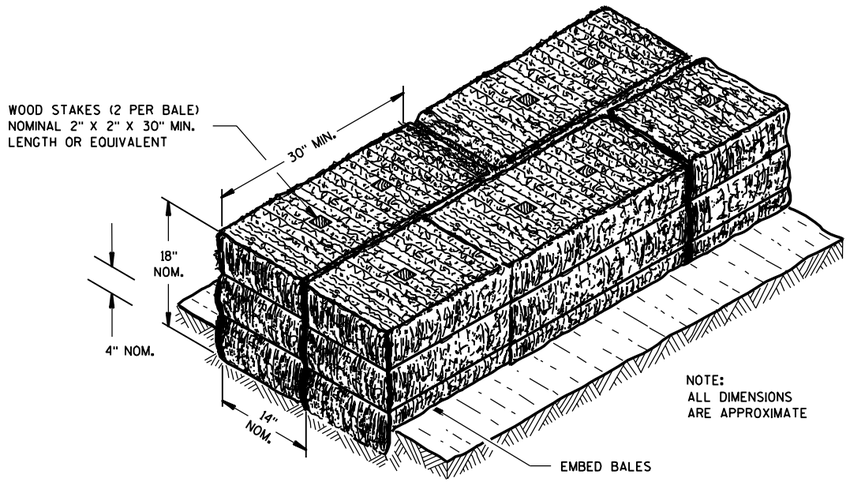

SECTION A-A

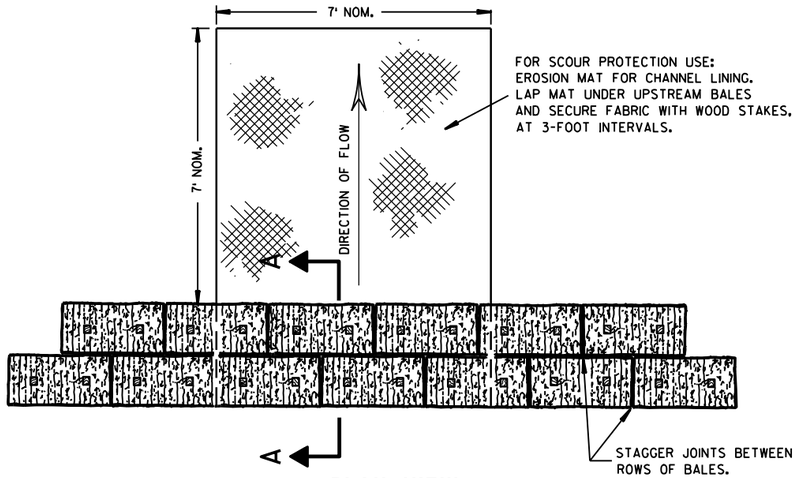

PLAN VIEW

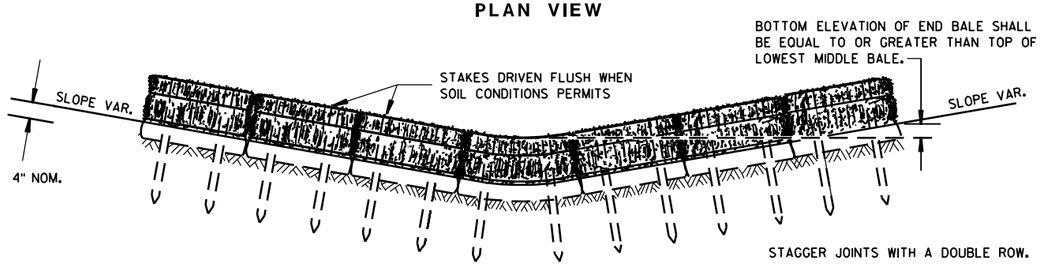

FRONT ELEVATION

TEMPORARY DITCH CHECK USING EROSION BALES (1)

GENERAL NOTES

DETAILS OF CONSTRUCTION, MATERIALS AND WORKMANSHIP NOT SHOWN ON THIS DRAWING SHALL CONFORM TO THE PERTINENT REQUIREMENTS OF THE STANDARD SPECIFICATIONS AND THE APPLICABLE SPECIAL PROVISIONS.

(1) TEMPORARY DITCH CHECKS EITHER EROSION BALES OR MANUFACTURED SHALL BE PAID FOR UNDER THE BID ITEM OF TEMPORARY DITCH CHECK. THE DEPARTMENT WILL NOT PAY FOR TEMPORARY DITCH CHECKS CONSTRUCTED OF A SINGLE ROW OF EROSION BALES.

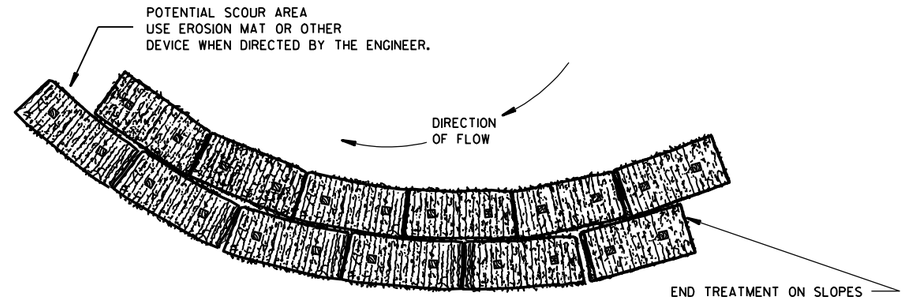

PLAN VIEW

WHEN ALTERING THE DIRECTION OF FLOW

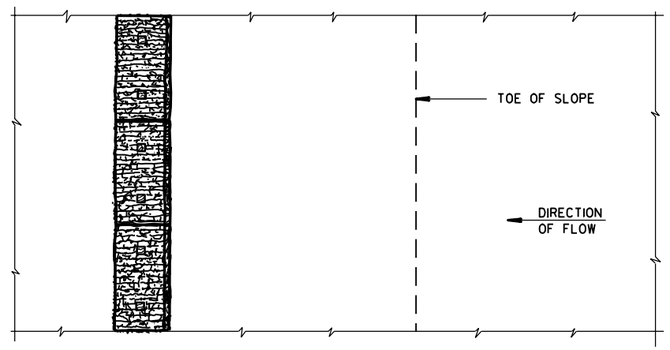

PLAN VIEW

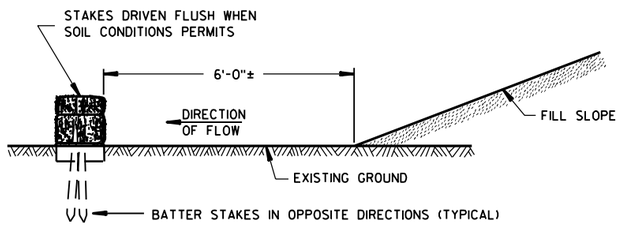

FRONT ELEVATION

WHEN EXISTING GROUND SLOPES AWAY FROM FILL SLOPE

EROSION BALES FOR SHEET FLOW

TYPICAL INSTALLATIONS OF EROSION BALES / TEMPORARY DITCH CHECKS

STATE OF WISCONSIN
DEPARTMENT OF TRANSPORTATION

APPROVED
6/04/02
DATE
CHIEF ROADWAY DEVELOPMENT ENGINEER
FHWA

6

S.D.D. 8 E 8-3

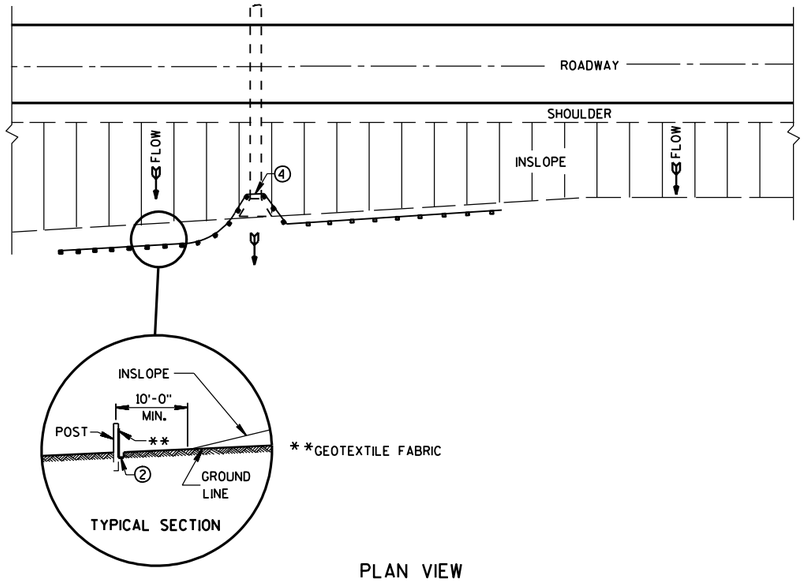

PLAN VIEW

TYPICAL APPLICATION OF SILT FENCE

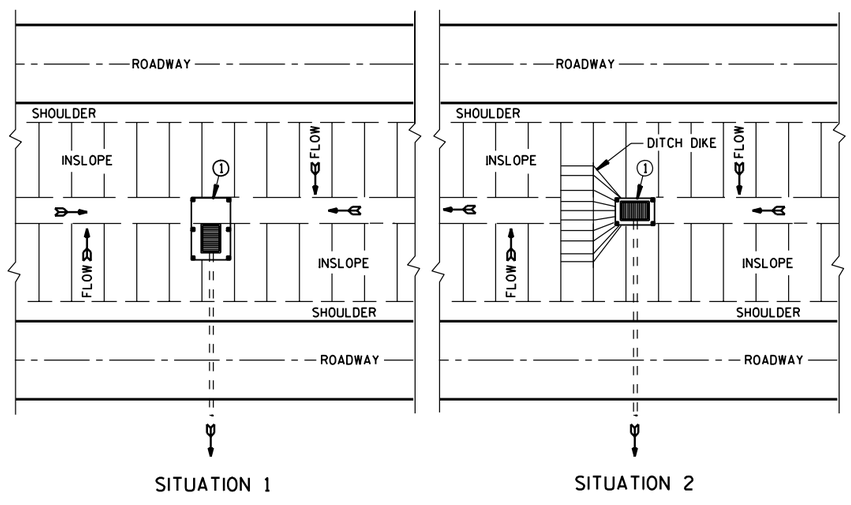

PLAN VIEW

SILT FENCE AT MEDIAN SURFACE DRAINS

GENERAL NOTES

DETAILS OF CONSTRUCTION NOT SHOWN ON THIS DRAWING SHALL CONFORM TO THE PERTINENT REQUIREMENTS OF THE STANDARD SPECIFICATIONS AND APPLICABLE SPECIAL PROVISIONS.

1. HORIZONTAL BRACE REQUIRED WITH 2" X 4" WOODEN FRAME OR EQUIVALENT AT TOP OF POSTS.
2. FOR MANUAL INSTALLATIONS THE TRENCH SHALL BE A MINIMUM OF 4" WIDE & 6" DEEP TO BURY AND ANCHOR THE GEOTEXTILE FABRIC. FOLD MATERIAL TO FIT TRENCH AND BACKFILL & COMPACT TRENCH WITH EXCAVATED SOIL.
3. WOOD POSTS SHALL BE A MINIMUM SIZE OF 1⅛" X 1⅛" OF OAK OR HICKORY.
4. SILT FENCE TO EXTEND ACROSS THE TOP OF THE PIPE.
5. CONSTRUCT SILT FENCE FROM A CONTINUOUS ROLL IF POSSIBLE BY CUTTING LENGTHS TO AVOID JOINTS. IF A JOINT IS NECESSARY USE ONE OF THE FOLLOWING TWO METHODS: A) OVERLAP THE END POSTS AND TWIST, OR ROTATE, AT LEAST 180 DEGREES, B) HOOK THE END OF EACH SILT FENCE LENGTH.

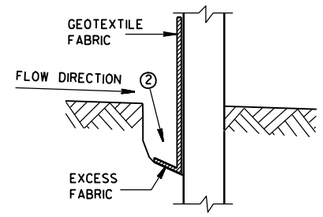

TRENCH DETAIL

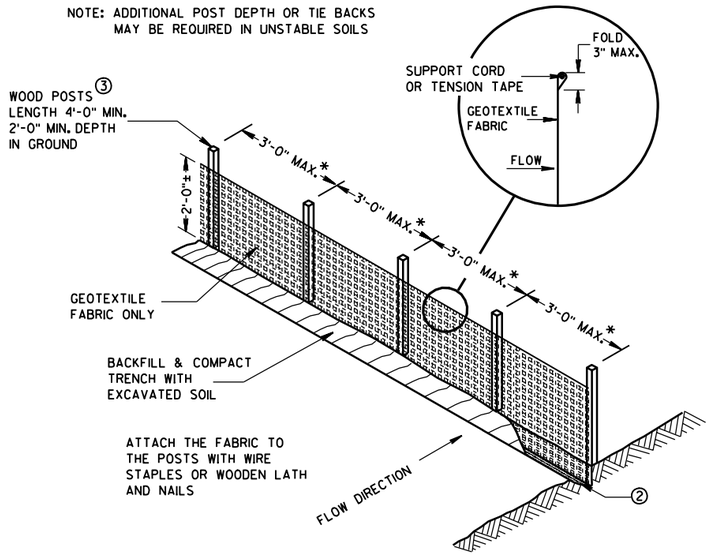

SILT FENCE

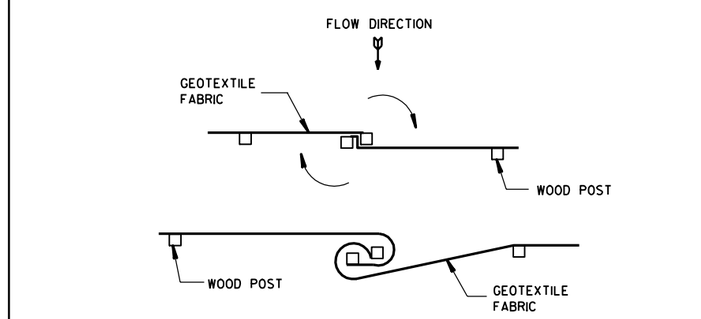

TWIST METHOD

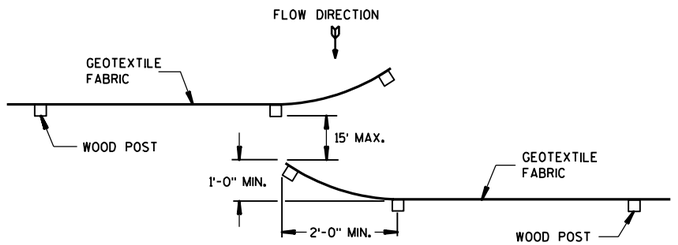

HOOK METHOD

JOINING TWO LENGTHS OF SILT FENCE 5

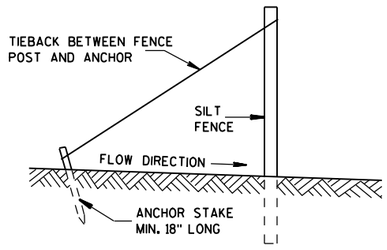

SILT FENCE TIE BACK

(WHEN REQUIRED BY THE ENGINEER)

6

SILT FENCE

STATE OF WISCONSIN
DEPARTMENT OF TRANSPORTATION

APPROVED

4-29-05
DATE

FHWA

CHIEF ROADWAY DEVELOPMENT ENGINEER

S.D.D. 8 E 9-6

S.D.D. 8 E 9-6

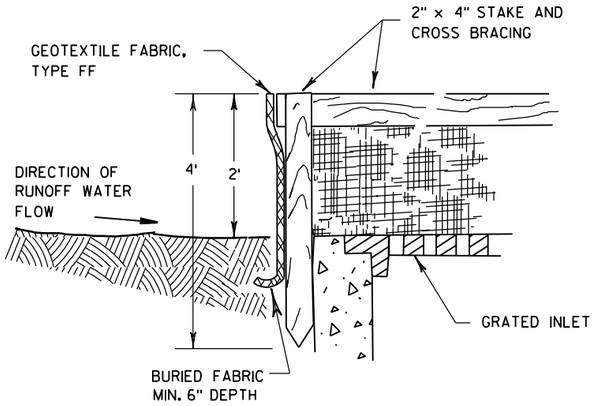

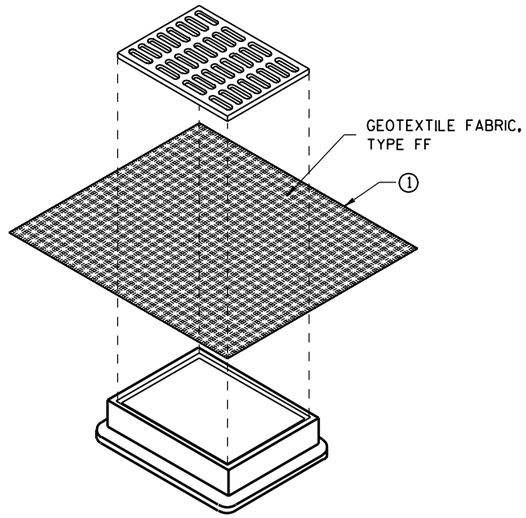

INLET PROTECTION, TYPE B
(WITHOUT CURB BOX)

(CAN BE INSTALLED IN ANY INLET WITHOUT A CURB BOX)

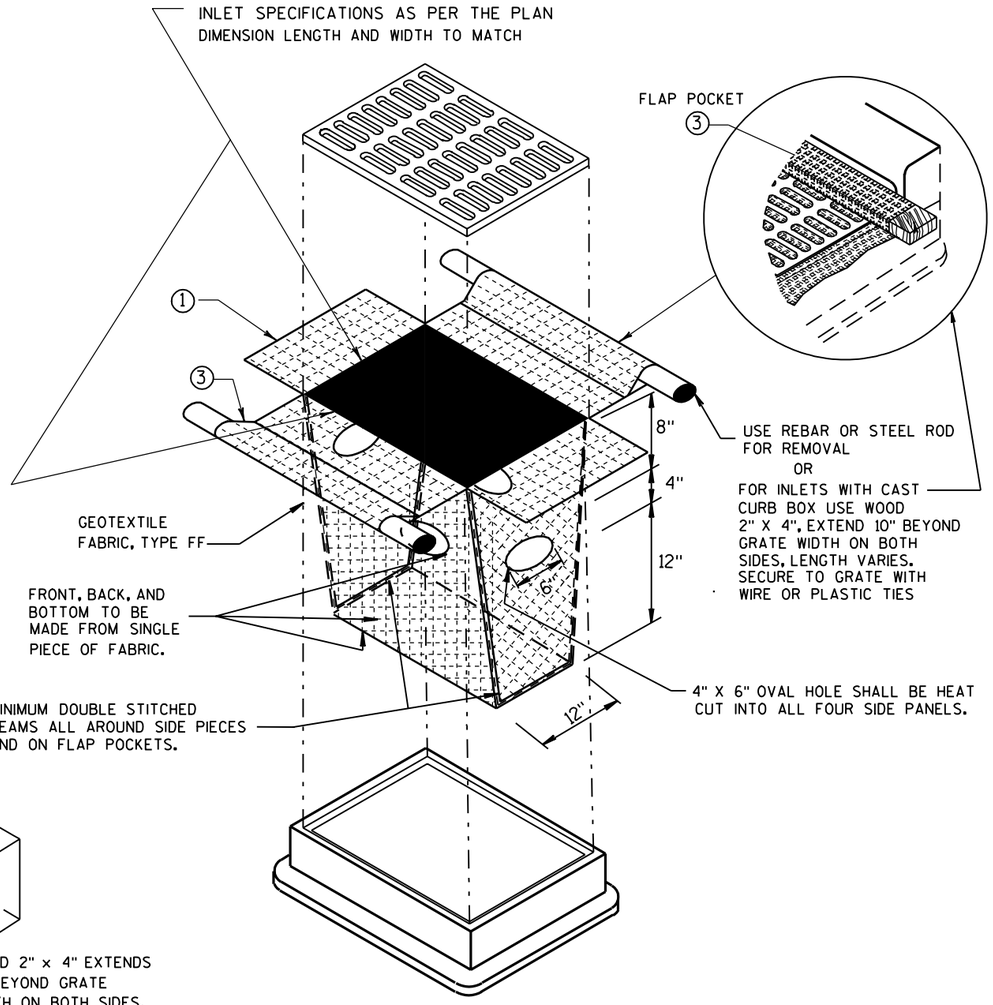

INLET PROTECTION, TYPE D

(CAN BE INSTALLED IN ANY INLET TYPE WITH
OR WITHOUT A CURB BOX AS PER NOTE ②)

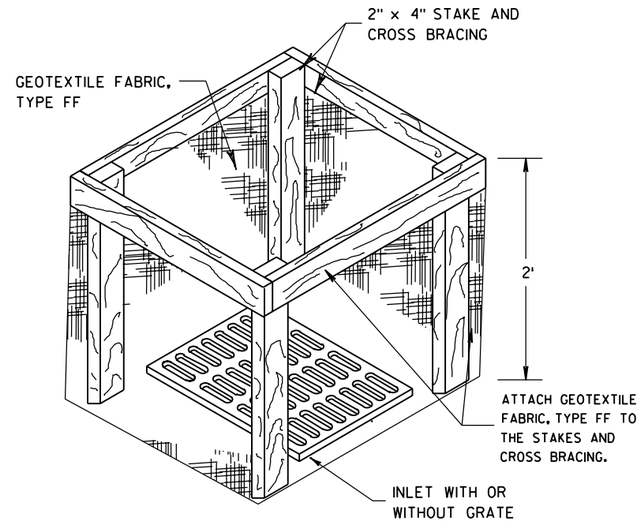

INLET PROTECTION, TYPE A

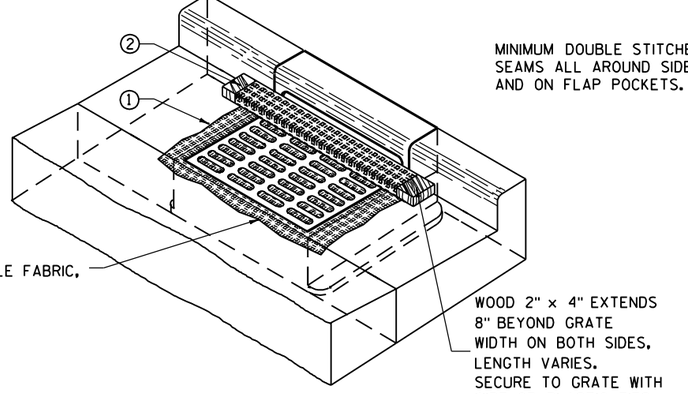

INLET PROTECTION, TYPE C (WITH CURB BOX)

GENERAL NOTES

INLET PROTECTION DEVICES SHALL BE MAINTAINED OR REPLACED AT THE DIRECTION OF THE ENGINEER.

MANUFACTURED ALTERNATIVES APPROVED AND LISTED ON THE DEPARTMENT'S EROSION CONTROL PRODUCT ACCEPTABILITY LIST MAY BE SUBSTITUTED.

WHEN REMOVING OR MAINTAINING INLET PROTECTION, CARE SHALL BE TAKEN SO THAT THE SEDIMENT TRAPPED ON THE GEOTEXTILE FABRIC DOES NOT FALL INTO THE INLET. ANY MATERIAL FALLING INTO THE INLET SHALL BE REMOVED IMMEDIATELY.

① FINISHED SIZE, INCLUDING FLAP POCKETS WHERE REQUIRED, SHALL EXTEND A MINIMUM OF 10" AROUND THE PERIMETER TO FACILITATE MAINTENANCE OR REMOVAL.

② FOR INLET PROTECTION, TYPE C (WITH CURB BOX), AN ADDITIONAL 18" OF FABRIC IS WRAPPED AROUND THE WOOD AND SECURED WITH STAPLES. THE WOOD SHALL NOT BLOCK THE ENTIRE HEIGHT OF THE CURB BOX OPENING.

③ FLAP POCKETS SHALL BE LARGE ENOUGH TO ACCEPT WOOD 2X4.

INSTALLATION NOTES

TYPE B & C

TRIM EXCESS FABRIC IN THE FLOW LINE TO WITHIN 3" OF THE GRATE.

THE CONTRACTOR SHALL DEMONSTRATE A METHOD OF MAINTENANCE, USING A SEWN FLAP, HAND HOLDS OR OTHER METHOD TO PREVENT ACCUMULATED SEDIMENT FROM ENTERING THE INLET.

TYPE D

DO NOT INSTALL INLET PROTECTION TYPE D IN INLETS SHALLOWER THAN 30", MEASURED FROM THE BOTTOM OF THE INLET TO THE TOP OF THE GRATE.

TRIM EXCESS FABRIC IN THE FLOW LINE TO WITHIN 3" OF THE GRATE.

THE INSTALLED BAG SHALL HAVE A MINIMUM SIDE CLEARANCE, BETWEEN THE INLET WALLS AND THE BAG, MEASURED AT THE BOTTOM OF THE OVERFLOW HOLES, OF 3". WHERE NECESSARY THE CONTRACTOR SHALL CINCH THE BAG, USING PLASTIC ZIP TIES, TO ACHIEVE THE 3" CLEARANCE. THE TIES SHALL BE PLACED AT A MAXIMUM OF 4" FROM THE BOTTOM OF THE BAG.

INLET PROTECTION
TYPE A, B, C, AND D

STATE OF WISCONSIN
DEPARTMENT OF TRANSPORTATION

APPROVED
10/16/02
DATE
FHWA

CHIEF ROADWAY DEVELOPMENT ENGINEER

6

S.D.D. 8 E 10-2

6

S.D.D. 8 E 10-2

METAL APRON ENDWALLS

PIPE DIA. (IN.)	MIN. THICK. (inches) STEEL	MIN. THICK. (inches) ALUM.	DIMENSIONS (inches) A (±1")	B (MAX.)	H (±1")	L (±1 1/2")	L1 ①	L2 ①	W (±2")	APPROX. SLOPE	BODY
12	.064	.060	6	6	6	21	12	17 1/2	24	2 1/2 to 1	1 Pc.
15	.064	.060	7	8	6	26	14	21 3/4	30	2 1/2 to 1	1 Pc.
18	.064	.060	8	10	6	31	15	28 1/4	36	2 1/2 to 1	1 Pc.
21	.064	.060	9	12	6	36	18	29 5/8	42	2 1/2 to 1	1 Pc.
24	.064	.075	10	13	6	41	18	37 1/4	48	2 1/2 to 1	1 Pc.
30	.079	.075	12	16	8	51	18	52 1/4	60	2 1/2 to 1	1 Pc.
36	.079	.105	14	19	9	60	24	59 3/4	72	2 1/2 to 1	2 Pc.
42	.109	.105	16	22	11	69	24	75 5/8	84	2 1/2 to 1	2 Pc.
48	.109	.105	18	27	12	78	24	81	90	2 1/4 to 1	3 Pc.
54	.109	.105	18	30	12	84	30	85 1/2	102	2 1/4 to 1	3 Pc.
60	.109×	.105×	18	33	12	87	—	—	114	2 to 1	3 Pc.
66	.109×	.105×	18	36	12	87	—	—	120	2 to 1	3 Pc.
72	.109×	.105×	18	39	12	87	—	—	126	2 to 1	3 Pc.
78	.109×	.105×	18	42	12	87	—	—	132	1 1/2 to 1	3 Pc.
84	.109×	.105×	18	45	12	87	—	—	138	1 1/2 to 1	3 Pc.
90	.109×	.105×	18	37	12	87	—	—	144	1 1/2 to 1	3 Pc.
96	.109×	.105×	18	35	12	87	—	—	150	1 1/2 to 1	3 Pc.

× EXCEPT CENTER PANEL SEE GENERAL NOTES

REINFORCED CONCRETE APRON ENDWALLS

PIPE DIA. (IN.)	DIMENSIONS (inches) T	A	B	C	D	E	G	APPROX. SLOPE
12	2	4	24	48 7/8	72 7/8	24	2	3 to 1
15	2 1/4	6	27	46	73	30	2 1/4	3 to 1
18	2 1/2	9	27	46	73	36	2 1/2	3 to 1
21	2 3/4	9	36	37 1/2	73 1/2	42	2 3/4	3 to 1
24	3	9 1/2	43 1/2	30	73 1/2	48	3	3 to 1
27	3 1/4	10 1/2	49 1/2	24	73 1/2	54	3 1/4	3 to 1
30	3 1/2	12	54	19 3/4	73 1/2	60	3 1/2	3 to 1
36	4	15	63	34 3/4	97 3/4	72	4	3 to 1
42	4 1/2	21	63	35	98	78	4 1/2	3 to 1
48	5	24	72	26	98	84	5	3 to 1
54	5 1/2	27	65	* 33 1/4 - ** 35	* 98 1/4 - ** 100	90	5 1/2	2 2/5 to 1
60	6	* 30 - ** 35	60	39	99	96	5	2 to 1
66	6 1/2	* 24 - ** 30	* 72 - ** 78	* 21 - ** 27	99	102	5 1/2	2 to 1
72	7	* 24 - ** 36	78	21	99	108	6	2 to 1
78	7 1/2	* 24 - ** 36	78	21	99	114	6 1/2	2 to 1
84	8	36	90 1/2	21	111 1/2	120	6 1/2	1 1/2 to 1
90	8 1/2	41	87 1/2	24	111 1/2	132	6 1/2	1 1/2 to 1

*MINIMUM
**MAXIMUM

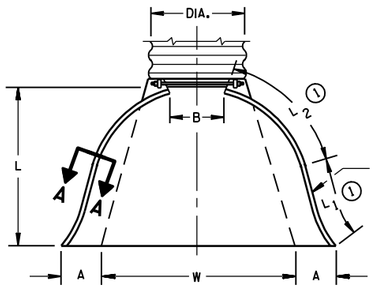

PLAN VIEW

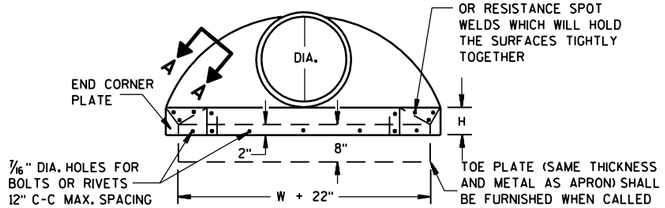

END VIEW

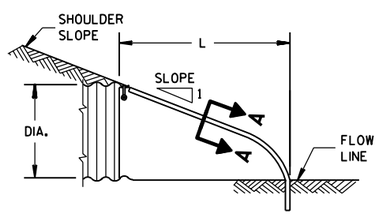

SIDE ELEVATION

METAL ENDWALLS

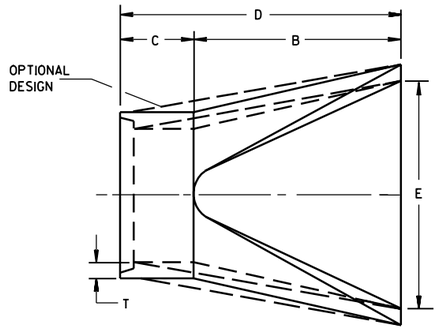

PLAN

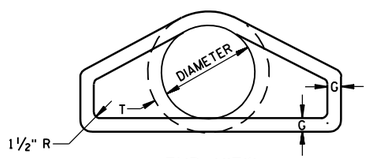

END VIEW

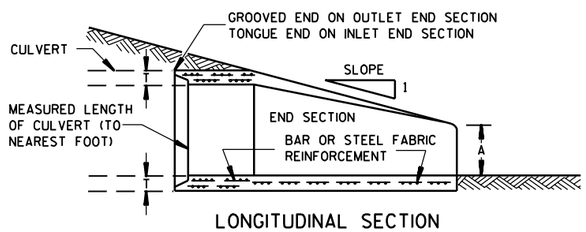

LONGITUDINAL SECTION

CONCRETE ENDWALLS

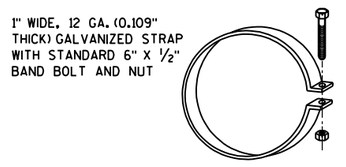

ALTERNATE FOR TYPE 1 CONNECTION

END SECTION CONNECTOR STRAP

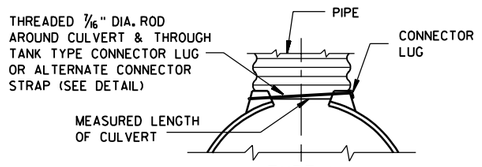

TYPE 1
FOR 12" THRU 24" CORR. PIPE

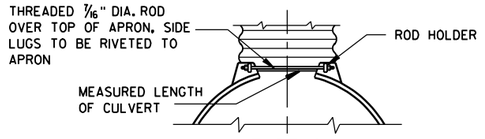

TYPE 2
FOR 30" THRU 96" CORR. PIPE

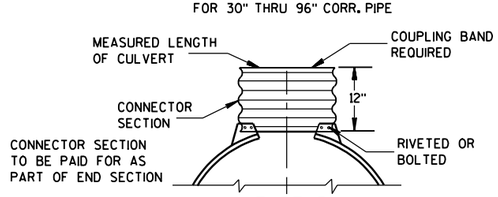

TYPE 3
FOR 42" THRU 96" CORR. PIPE

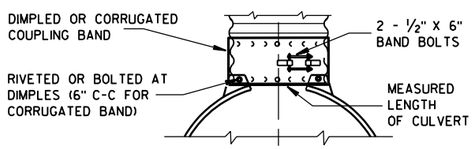

TYPE 5
ALTERNATE FOR:
ALL SIZES CORRUGATED CIRCULAR PIPE

NOTE: DIMPLED BAND FITS OVER OUTSIDE OF ENDWALL. AND CORRUGATED BAND FITS INSIDE ENDWALL. DIMPLED BAND MAY BE USED WITH HELICALLY CORRUGATED PIPE.

FOR CIRCUMFERENTIALLY CORRUGATED PIPE USE ENDWALL CONNECTION DETAILS 1, 2, 3 OR 5 AS APPLICABLE.

FOR HELICALLY CORRUGATED PIPE USE ENDWALL CONNECTION DETAILS 1, 2 OR 5.

FOR HELICALLY CORRUGATED PIPES WITH TWO CIRCUMFERENTIAL CORRUGATIONS AT EACH END USE ENDWALL CONNECTION DETAILS 1, 2 OR 3.

CONNECTION DETAILS

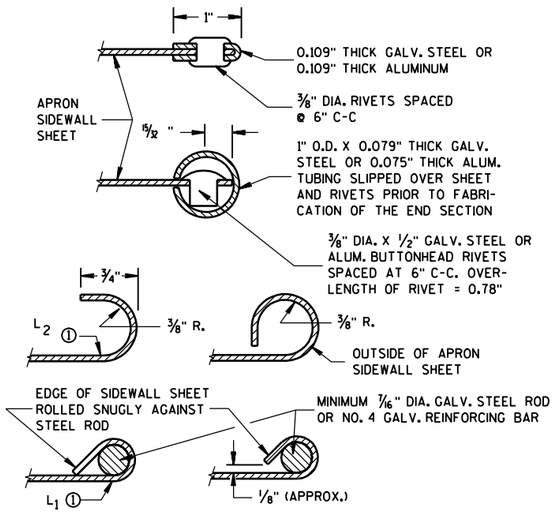

SECTION A-A

GENERAL NOTES

DETAILS OF CONSTRUCTION, MATERIALS AND WORKMANSHIP NOT SHOWN ON THIS DRAWING SHALL CONFORM TO THE PERTINENT REQUIREMENTS OF THE STANDARD SPECIFICATIONS AND THE APPLICABLE SPECIAL PROVISIONS.

CONCRETE CULVERT ENDWALLS MAY NOT BE USED WITH GALVANIZED STEEL OR ALUMINUM CULVERT PIPE OR VISE VERSA. GALVANIZED STEEL OR ALUMINUM ENDWALLS SHALL NORMALLY BE INSTALLED ON CULVERT PIPE OF THE SAME METAL.

ALL THREE PIECE STEEL APRON ENDWALLS FOR 60" DIAMETER PIPE AND LARGER SHALL HAVE 0.109" SIDES AND 0.138" CENTER PANELS. ALL THREE PIECE ALUMINUM APRON ENDWALLS FOR 60" DIAMETER PIPE AND LARGER SHALL HAVE 0.105" SIDES AND 0.134" CENTER PANELS. THE WIDTH OF CENTER PANELS SHALL BE GREATER THAN 20 PERCENT OF THE PIPE PERIMETER.

LAP SEAMS SHALL BE TIGHTLY JOINED BY GALVANIZED RIVETS OR BOLTS FOR STEEL UNITS AND ALUMINUM RIVETS AND BOLTS FOR ALUMINUM UNITS. FOR THE 60" THROUGH 96" DIAMETER APRON ENDWALL SIZES, THE REINFORCED EDGES AND CENTER PANEL SEAMS SHALL BE FURTHER REINFORCED WITH GALVANIZED STEEL OR ALUMINUM STIFFENER ANGLES. THE ANGLES SHALL BE ATTACHED BY GALVANIZED NUTS AND BOLTS FOR STEEL UNITS AND ALUMINUM NUTS AND BOLTS FOR ALUMINUM UNITS.

WHERE TWO OR MORE PIPES WITH APRON ENDWALLS ARE LAID ADJACENT TO EACH OTHER, THEY SHALL BE SEPARATED BY A DISTANCE SUFFICIENT TO PROVIDE A MINIMUM CLEARANCE OF 6 INCHES BETWEEN APRON ENDWALLS.

① FOR PIPE SIZES UP TO 60" DIAMETER, A 180° ROLLED EDGE MAY BE USED INSTEAD OF STEEL ROD REINFORCEMENT. SEE SECTION A-A.

APRON ENDWALLS FOR CULVERT PIPE

STATE OF WISCONSIN
DEPARTMENT OF TRANSPORTATION

APPROVED
11/30/94
DATE

CHIEF ROADWAY DEVELOPMENT ENGINEER

FHWA

6

S.D.D. 8 F 1-11

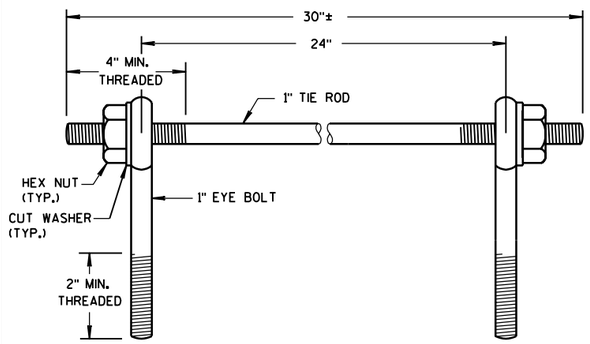

EYE BOLTS AND TIE ROD

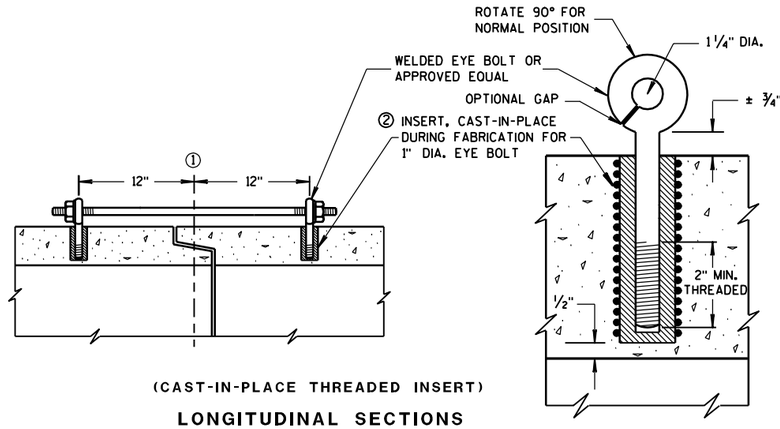

(CAST-IN-PLACE THREADED INSERT)

LONGITUDINAL SECTIONS

GENERAL NOTES

DETAILS OF CONSTRUCTION, MATERIALS, AND WORKMANSHIP NOT SHOWN ON THIS DRAWING SHALL CONFORM TO THE PERTINENT REQUIREMENTS OF THE STANDARD SPECIFICATIONS AND APPLICABLE SPECIAL PROVISIONS.

CONCRETE CULVERT PIPE SHALL BE TIED TOGETHER IN THE MANNER ILLUSTRATED BY THIS DETAIL AT LOCATIONS DESIGNATED ON THE PLAN. THE CONTRACTOR MAY USE EITHER ALTERNATE 1, 2 OR 3 FOR DRAINAGE STRUCTURES. ONLY ALTERNATE 1 AND 3 MAY BE USED FOR CATTLE PASSES. UNLESS OTHERWISE STATED IN THE CONTRACT THE MATERIALS, FABRICATION AND WORK NECESSARY TO TIE CULVERT PIPE AS INDICTED ON THE PLANS AND BY THIS DETAIL WILL BE CONSIDERED INCIDENTAL TO CILVERT PIPE, REINFORCED CONCRETE CULVERT PIPE, OR REINFORCED CONCRETE PIPE CATTLE PASS.

DETAILED DRAWINGS FOR PROPOSED ALTERNATE DESIGNS FOR JOINT TIES SHALL BE SUBMITTED TO THE ENGINEER FOR APPROVAL.

① ℄ OF TONGUE AND GROOVE OR BELL AND SPIGOT JOINTS.

② THE INSIDE OF THE THREADED INSERTS SHALL BE CLEAN TO ALLOW THE INSERTION OF THREADED EYE BOLTS.

③ HOLES SHALL BE CAST-IN-PLACE OR DRILLED 12 INCHES FROM ℄ OF TONGUE AND GROOVE.

④ BOLT PROJECTION INSIDE OF PIPE SHALL NOT EXCEED 2 INCHES.

⑤ OPENING TO BE ROD DIAMETER PLUS 1 INCH.

⑥ LENGTH ADEQUATE TO EXTEND TO WITHIN 1/2 INCH OF THE INNER SURFACE OF THE PIPE.

EYE BOLT AND TIE ROD ASSEMBLY (ALTERNATE NO. 1)

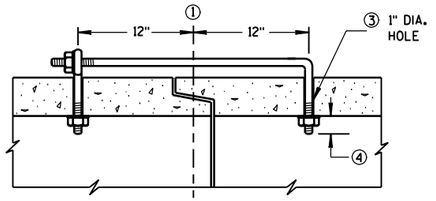

(TONGUE & GROOVE PIPE)

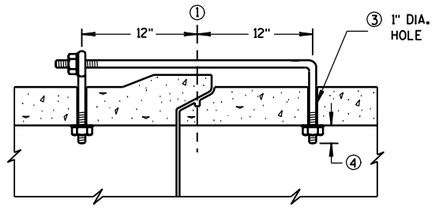

(MODIFIED BELL PIPE)

LONGITUDINAL SECTION

EYE BOLT DIMENSION TABLE

PIPE SIZE	L = LENGTH	
	TONGUE & GROOVE PIPE	MODIFIED BELL PIPE
18" TO 24"	4 1/2"	6 1/4"
30"	5"	7"
36"	5 1/2"	7"
42"	6"	
48"	6 1/2"	
60"	7 1/2"	
66"	8"	

ADJUSTABLE TIE ROD TABLE

PIPE DIAMETER	TIE ROD DIAMETER	D	L_1	N
12-60	5/8	5/8	5	1/2
66-84	3/4	3/4	5	1/2
90-108	1	1	7	1 7/16

DIMENSIONS SHOWN ARE IN INCHES

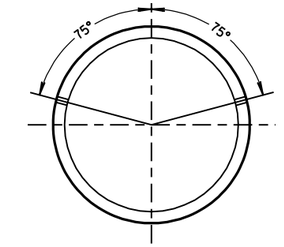

PLACEMENT OF (2) CAST-IN-PLACE INSERTS OR HOLES DURING FABRICATION FOR PIPE SECTIONS REQUIRING TIE RODS

TRANSVERSE SECTION

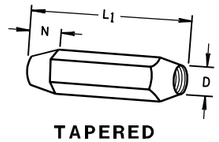

TAPERED

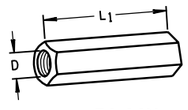

PLAIN

RIGHT AND LEFT THREADS

SLEEVE NUTS

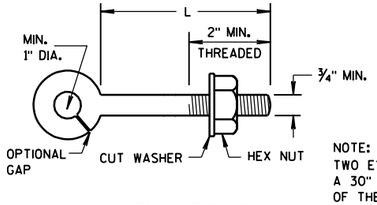

EYE BOLT

NOTE: TWO EYE BOLTS MAY BE USED WITH A 30" LONG THREADED ROD IN LIEU OF THE 90° BENT TIE ROD.

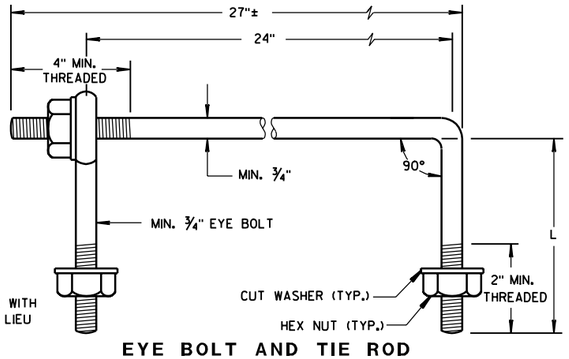

EYE BOLT AND TIE ROD

(JOINT TIES FOR 18" TO 66" DIA. CONCRETE PIPE)

EYE BOLT AND TIE ROD ASSEMBLY (ALTERNATE NO. 2)

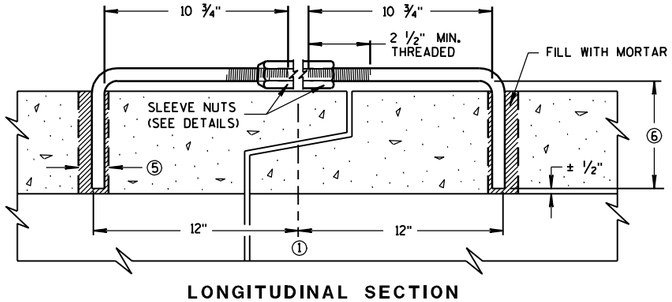

LONGITUDINAL SECTION

(JOINT TIES FOR 12" TO 108" DIA. CONCRETE PIPE)

ADJUSTABLE TIE ROD (ALTERNATE NO. 3)

JOINT TIES FOR CONCRETE PIPE

STATE OF WISCONSIN
DEPARTMENT OF TRANSPORTATION

APPROVED
12/17/07 — DATE
/S/ Jerry H. Zogg — ROADWAY STANDARDS DEVELOPMENT ENGINEER
FHWA

6

S.D.D. 8 F 4-6

6

S.D.D. 8 F 4-6

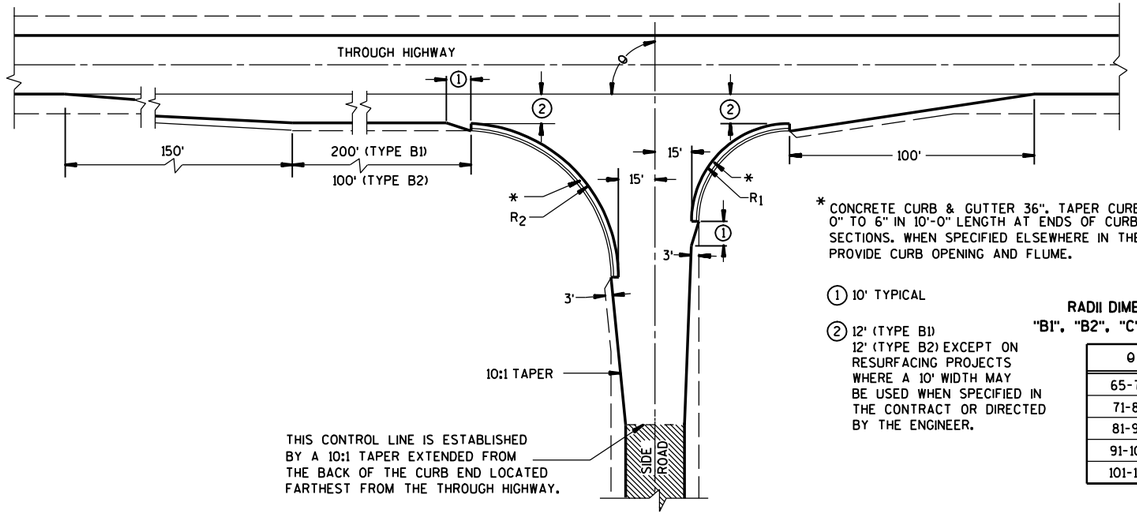

TYPE "B1" AND "B2"

* CONCRETE CURB & GUTTER 36". TAPER CURB HEIGHT 0" TO 6" IN 10'-0" LENGTH AT ENDS OF CURB & GUTTER SECTIONS. WHEN SPECIFIED ELSEWHERE IN THE CONTRACT, PROVIDE CURB OPENING AND FLUME.

① 10' TYPICAL

② 12' (TYPE B1)
12' (TYPE B2) EXCEPT ON RESURFACING PROJECTS WHERE A 10' WIDTH MAY BE USED WHEN SPECIFIED IN THE CONTRACT OR DIRECTED BY THE ENGINEER.

RADII DIMENSIONS FOR TYPES "B1", "B2", "C" AND "D" INTERSECTIONS

θ	R_1	R_2
65-70	35	70
71-80	40	70
81-90	40	60
91-100	50	55
101-110	60	45

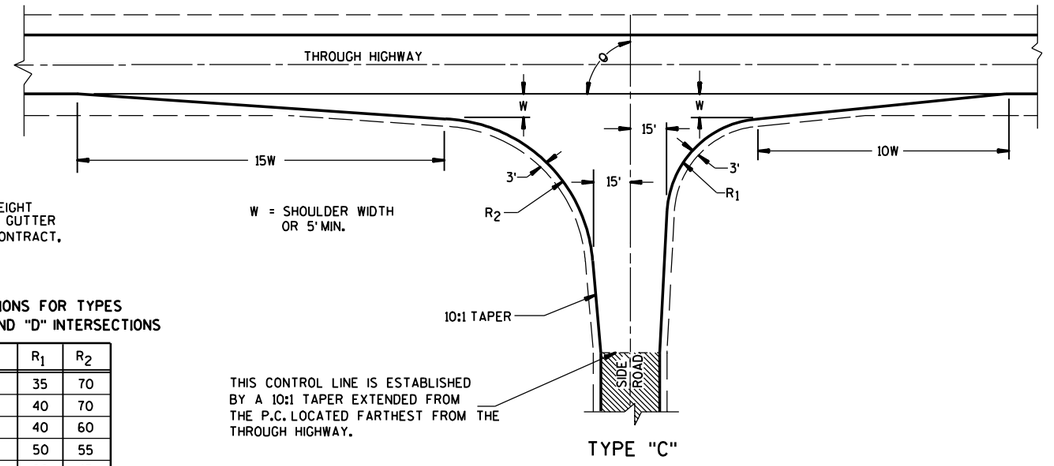

TYPE "C"

GENERAL NOTES

DESIGNS MAY BE USED INTERCHANGEABLY IN COMBINATION OR SEPARATELY FOR ANY ONE COMPLETE INTERSECTION DEPENDING UPON INTERSECTION ANGLE AND SURFACING OF EACH APPROACH ROADWAY.

SIDE ROAD SURFACING NOTE

WHEN THE SIDE ROAD IS NOT PRESENTLY PAVED, PAVEMENT SHALL BE PLACED TO THE LIMITS SHOWN UNLESS OTHERWISE PROVIDED IN THE CONTRACT. WHERE THE CONSTRUCTION LIMITS ARE BEYOND THE PAVING LIMITS, CRUSHED AGGREGATE SURFACING SHALL BE PLACED BETWEEN THE PAVING LIMITS AND CONSTRUCTION LIMITS.

WHEN THE SIDE ROAD IS PRESENTLY PAVED, NEW PAVEMENT SHALL BE PLACED TO THE LIMITS OF DESIGN AS SHOWN AND BEYOND, IF NECESSARY, TO MEET EXISTING PAVEMENT.

WHEN THE SIDE ROAD IS THE CONSTRUCTION PROJECT, THE INTERSECTION SURFACING SHALL BE THE SAME AS FOR THE PROJECT.

▨ EXISTING SURFACE

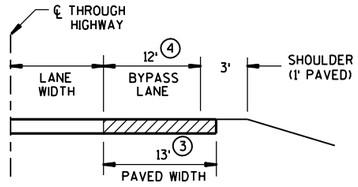

SECTION A-A
(SHOWING BYPASS LANE AND SHOULDER)

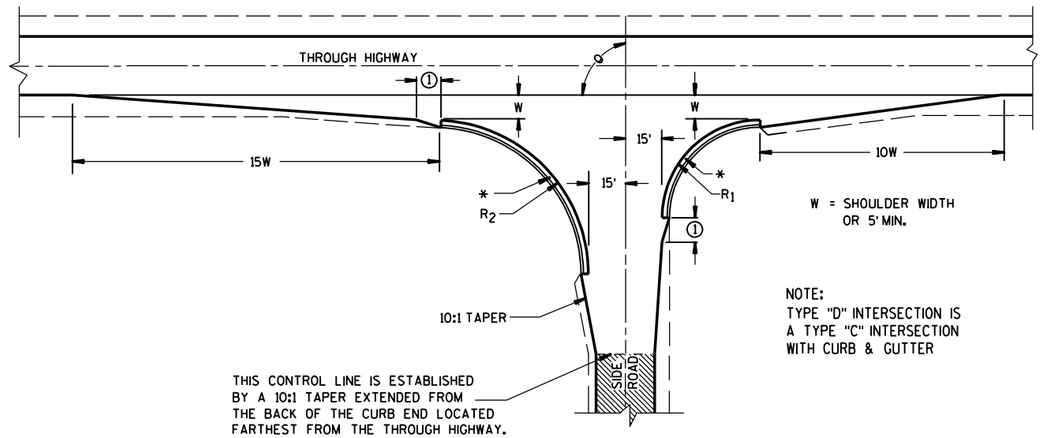

NOTE:
TYPE "D" INTERSECTION IS A TYPE "C" INTERSECTION WITH CURB & GUTTER

TYPE "D"

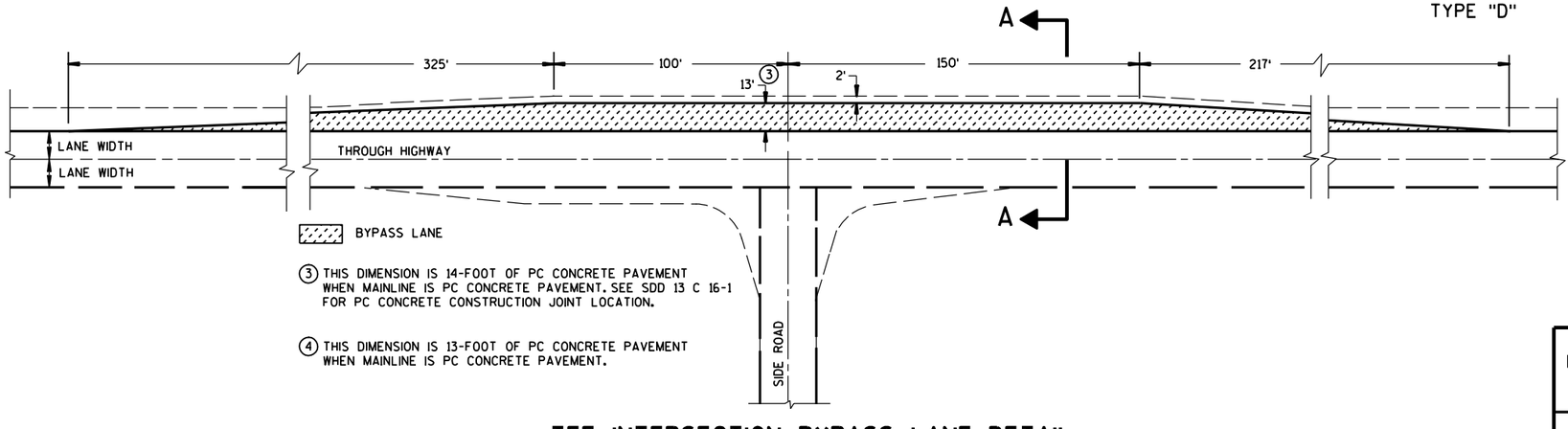

TEE INTERSECTION BYPASS LANE DETAIL

AT-GRADE SIDE ROAD INTERSECTION, TYPES "B1", "B2", "C" AND "D" AND TEE INTERSECTION BYPASS LANE

STATE OF WISCONSIN
DEPARTMENT OF TRANSPORTATION

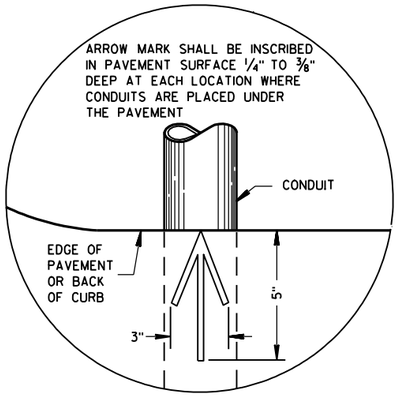

PLAN VIEW

ARROW MARK

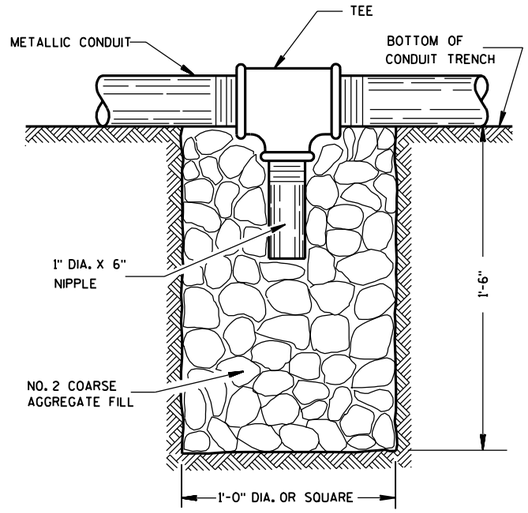

NOTE: INSTALL AT LOCATIONS WHERE METALLIC CONDUITS CANNOT BE PITCHED TO DRAIN INTO A PULL BOX.

DRAIN SUMP FOR METALLIC CONDUIT

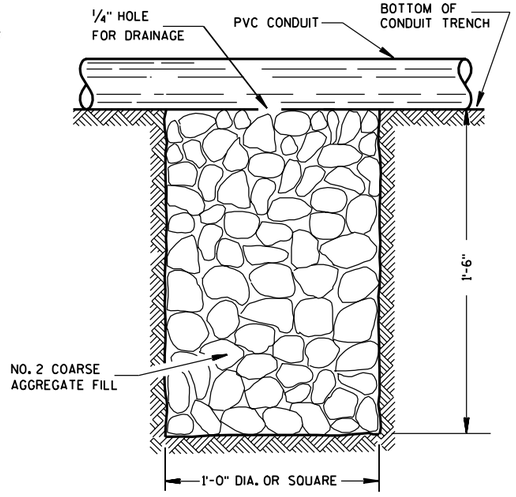

NOTE: INSTALL AT LOCATIONS WHERE PVC CONDUITS CANNOT BE PITCHED TO DRAIN INTO A PULL BOX.

DRAIN SUMP FOR PVC CONDUIT

GENERAL NOTES

DETAILS OF CONSTRUCTION, MATERIALS AND WORKMANSHIP NOT SHOWN ON THIS DRAWING SHALL CONFORM TO THE PERTINENT REQUIREMENTS OF THE CONTRACT.

METALLIC (STANDARD SPECIFICATION 652.2.2) OR NONMETALLIC (STANDARD SPECIFICATION 652.2.3) CONDUIT SHALL BE FURNISHED AND PLACED AS SHOWN.

DEPTH OF CONDUIT INSTALLED BELOW THE TRAVELED WAY SHALL BE 24 INCHES MINIMUM AND 36 INCHES MAXIMUM.

DEPTH OF CONDUIT INSTALLED THAT IS NOT BELOW THE TRAVELED WAY SHALL BE 18 INCHES MINIMUM AND 36 INCHES MAXIMUM.

ANY EXCEPTION TO THE MAXIMUM DEPTH SHALL BE ONLY WITH THE WRITTEN APPROVAL OF THE ENGINEER.

THE TRENCH SHALL NOT BE BACKFILLED PRIOR TO INSPECTION OF THE CONDUIT.

ALL METALLIC CONDUIT RACEWAY ENDS SHALL BE REAMED AND THREADED.

ALL METALLIC CONDUIT IN WHICH WIRE OR CABLE IS TO BE INSTALLED SHALL BE BUSHED WITH APPROVED THREADED BUSHINGS BEFORE INSTALLATION OF THE WIRE OR CABLE.

ALL METALLIC CONDUITS IN WHICH WIRE OR CABLE IS NOT TO BE INSTALLED SHALL BE CAPPED WITH THREADED PROTECTIVE CAPS, AS APPROVED BY THE ENGINEER.

ALL NONMETALLIC CONDUIT SHALL BE CAPPED OR PLUGGED IMMEDIATELY AFTER INSTALLATION AND SHALL REMAIN CAPPED OR PLUGGED UNTIL WIRE/CABLES ARE INSTALLED.

NONMETALLIC CONDUITS IN WHICH WIRE OR CABLE IS NOT BEING INSTALLED SHALL REMAIN CAPPED OR PLUGGED.

BENDING OF PVC ELECTRICAL CONDUIT SHALL BE ACCOMPLISHED BY USING A BLANKET OR EMERSION TYPE TANK DESIGNED FOR THE PURPOSE OF BENDING PVC ELECTRICAL CONDUIT.

ALL CUT ENDS SHALL BE TRIMMED INSIDE AND OUTSIDE TO REMOVE ALL ROUGH EDGES ON NONMETALLIC CONDUIT. (SEE NEC 347.5)

WHEN REQUIRED TO CONNECT NONMETALLIC CONDUIT TO METALLIC CONDUIT, ONLY U.L. LISTED ADAPTER FITTINGS SHALL BE USED.

PRIOR TO CONDUIT ACCEPTANCE, CONDUIT CAPS OR PLUGS SHALL BE REMOVED, AND THE CAPS, PLUGS AND CONDUIT ENDS SHALL BE THOROUGHLY CLEANED AND THEN THE CAPS OR PLUGS REINSTALLED TO ENSURE THAT THE CAPS OR PLUGS CAN BE EASILY REMOVED IN THE FUTURE.

ALL CONDUIT BEING FURNISHED AND INSTALLED SHALL HAVE THE U.L. LABEL FIRMLY ATTACHED.

CONDUIT RUNS SHALL BE THE SAME SIZE OF CONDUIT FROM ONE END TO THE OTHER (FROM PULL BOX TO PULL BOX-OR-JUNCTION BOX TO JUNCTION BOX-OR-BASE TO BASE, ETC.).

POLY ROPE OR A PULL WIRE SHALL BE INSTALLED AS STATED IN THE STANDARD SPECIFICATION, ITEM 652.3.1.1.

ALL CONDUIT RUNS SHALL BE STRAIGHT (WITHOUT BENDS) FROM PULL BOX TO PULL BOX, PULL BOX TO BASE AND BASE TO BASE AS SHOWN ON THE PLANS.

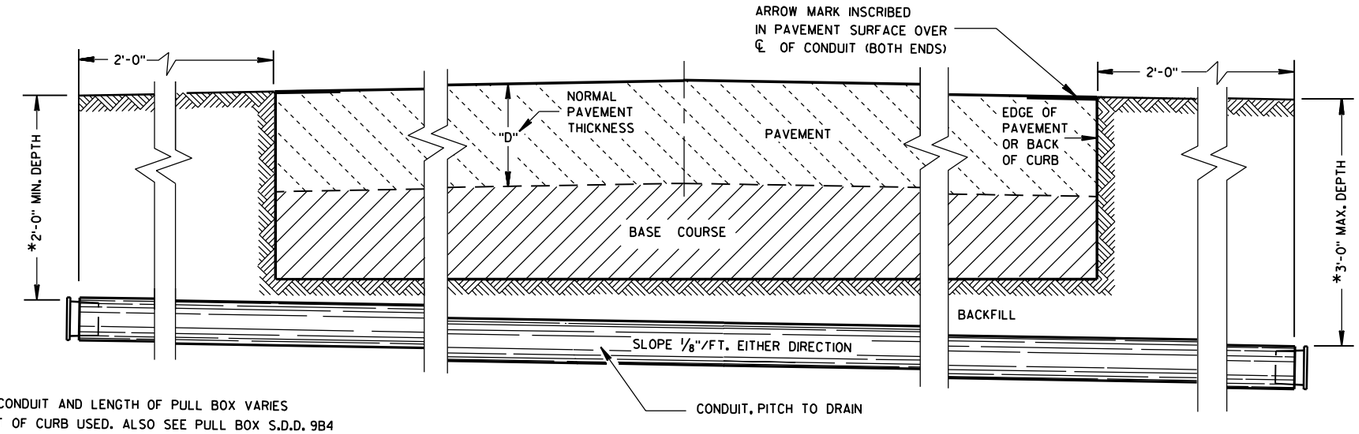

*DEPTH OF CONDUIT AND LENGTH OF PULL BOX VARIES WITH HEIGHT OF CURB USED. ALSO SEE PULL BOX S.D.D. 9B4

SIDE ELEVATION

DETAIL FOR CONDUIT UNDER PAVED HIGHWAYS

CONDUIT

STATE OF WISCONSIN
DEPARTMENT OF TRANSPORTATION

APPROVED
10/23/03
DATE
FHWA

STATE ELECTRICAL ENGINEER FOR HIGHWAYS

6

S.D.D. 9 B 2-7

TABLE OF NOMINAL DIMENSIONS AND WEIGHTS

DIMENSION IN INCHES		CORRUGATED STEEL PIPE								
PIPE DIAMETER (INSIDE)	A	12	12	12	18	18	18	24	24	24
PIPE LENGTH **	B	24	30	36	24	30	36	36	42	48
WALL THICKNESS	C	0.064	0.064	0.064	0.064	0.064	0.064	0.064	0.064	0.064
COVER	D	10 1/4	10 1/4	10 1/4	16 1/4	16 1/4	16 1/4	22 1/4	22 1/4	22 1/4
FRAME	E	14 1/2	14 1/2	14 1/2	20 1/2	20 1/2	20 1/2	26 1/2	26 1/2	26 1/2
FRAME	F	8 1/2	8 1/2	8 1/2	14 1/2	14 1/2	14 1/2	20 1/2	20 1/2	20 1/2
FRAME	G	11 1/2	11 1/2	11 1/2	17 1/2	17 1/2	17 1/2	23 1/2	23 1/2	23 1/2
WEIGHT IN POUNDS *										
FRAME AND COVER		60	60	60	110	110	110	155	155	155

* THE ACTUAL WEIGHT OF THE MANHOLE FRAME AND COVER MAY VARY WITHIN 5 PERCENT PLUS OR MINUS OF THE WEIGHTS SHOWN.

** NORMALLY USED LENGTHS. THE PROJECT ENGINEER SHALL DETERMINE IF PIPE LENGTHS, OTHER THAN THOSE SPECIFIED, SHALL BE USED, TO A MAXIMUM OF 48" (CONTINUOUS LENGTH, NON-SPLICED). THE ADDITIONAL LENGTH SHALL BE INCIDENTAL TO THE PULL BOX BID PRICE.

GENERAL NOTES

DETAILS OF CONSTRUCTION, MATERIALS AND WORKMANSHIP NOT SHOWN ON THIS DRAWING SHALL CONFORM TO THE PERTINENT REQUIREMENTS OF THE CONTRACT.

ALL FRAMES AND COVERS SHALL BE HEAVY DUTY TYPE, SUITABLE FOR VEHICULAR TRAFFIC LOADS.

PULL BOXES LOCATED IN THE ROADWAYS SHALL HAVE LOCKING COVERS.

ENTRANCE HOLES INTO PULL BOXES SHALL BE CUT WITH A CIRCULAR HOLE SAW OR HYDRAULIC CONDUIT PUNCH. HOLE SIZE SHALL BE THE OUTSIDE DIAMETER OF THE CONDUIT THAT IS TO FIT IN THE OPENING PLUS NO MORE THAN 1/4".

THE CONTRACTOR SHALL NOT INSTALL WIRE IN ANY PULL BOX UNTIL ITS INSTALLATION HAS BEEN INSPECTED AND ACCEPTED BY THE ENGINEER.

GROUNDING LUGS (MECHANICAL CONNECTORS) SHALL BE U.L. LISTED AND APPROVED FOR USE WITH COPPER WIRE. THE MECHANICAL CONNECTION (INSIDE AND OUTSIDE) TO THE PULL BOX, SHALL BE TOTALLY AND PERMANENTLY SEALED WITH A SILICONE OR RUBBERIZED CAULKING COMPOUND AS APPROVED BY THE ENGINEER.

GROUNDING LUGS ARE NOT REQUIRED IN PULL BOXES WHEN VOLTAGES OF LESS THAN 50 VOLTS AC ARE THE ONLY VOLTAGES ENCOUNTERED IN THE BOXES.

ALL METALLIC CONDUIT IN WHICH WIRE AND/OR CABLE IS TO BE INSTALLED, SHALL BE BUSHED BEFORE INSTALLATION OF THE WIRE AND/OR CABLE.

S.D.D. 9B2, "CONDUIT", APPLIES TO THIS DRAWING.

WHEN PULL BOXES ARE INSTALLED FOR FUTURE USE, DO NOT INSTALL THE EQUIPMENT GROUNDING LUG. THE EQUIPMENT GROUNDING LUG, THE EQUIPMENT GROUNDING ELECTRODE AND THE EQUIPMENT GROUNDING CONDUCTOR SHALL BE REQUIRED AND INSTALLED UNDER A FUTURE WIRING CONTRACT.

IF PULL BOX EQUIPMENT GROUNDING IS REQUIRED USING AN EQUIPMENT GROUNDING ELECTRODE IN EACH PULL BOX, THE EQUIPMENT GROUNDING ELECTRODE SHALL BE 5/8" X 8'-0", COPPERCLAD AND BE EXOTHERMICALLY WELDED TO A #4 AWG, COPPER, STRANDED WIRE (BARE OR GREEN INSULATED). THE #4 AWG WIRE SHALL BE 4 FEET IN LENGTH, NEATLY COILED, TAPED AND AVAILABLE FOR USE WHEN REQUIRED.

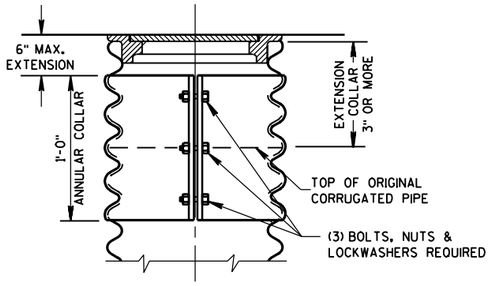

CORRUGATED PIPE EXTENDER

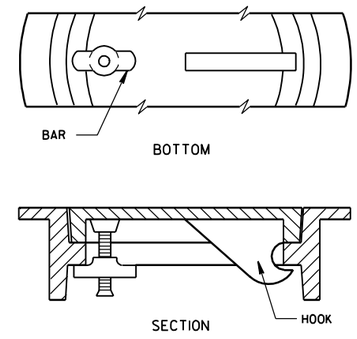

ALTERNATE COVER (LOCKING)

TIGHTENING BAR TYPE

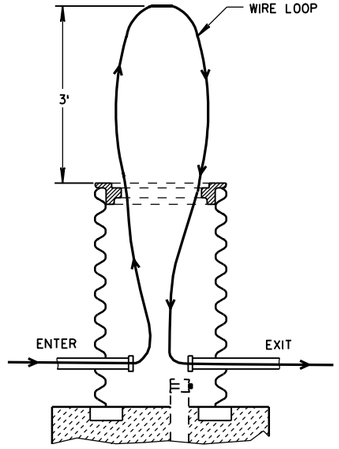

MEASUREMENT DETAIL FOR WIRE/CABLE IN THE PULL BOX

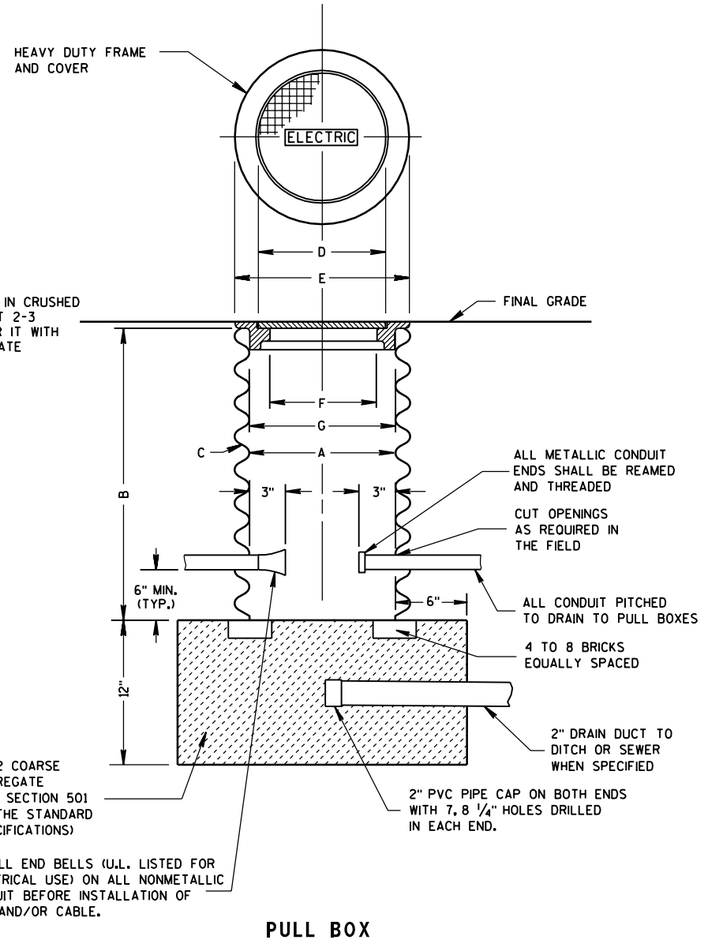

PULL BOX

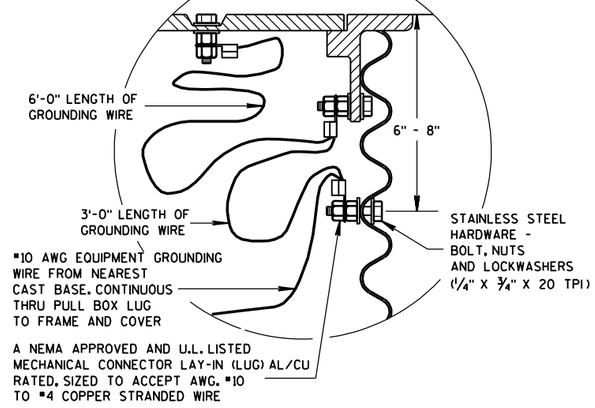

EQUIPMENT GROUNDING LUG AND LOCATION IN STEEL PULL BOXES

PULL BOX

STATE OF WISCONSIN
DEPARTMENT OF TRANSPORTATION

APPROVED
9/27/06 — DATE
/S/ Balu Ananthanarayanan — STATE ELECTRICAL ENGINEER FOR HIGHWAYS
FHWA

6

S.D.D. 9 B 4-9

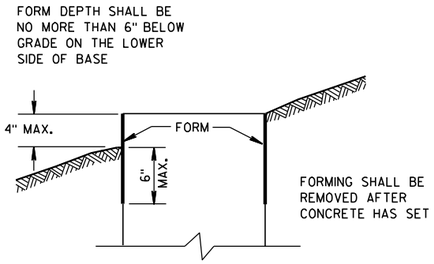

FORMING DETAIL

QUANTITY REQUIREMENTS	CONCRETE BASE TYPE		
	1	2	5
APPROX. CUBIC YARDS OF CONCRETE	0.40	0.57	0.40
LBS. OF HOOP BAR STEEL	NONE	23	16
LBS. OF VERTICAL BAR STEEL	NONE	60	18

GENERAL NOTES

DETAILS OF CONSTRUCTION, MATERIALS AND WORKMANSHIP NOT SHOWN ON THIS DRAWING SHALL CONFORM TO THE PERTINENT REQUIREMENTS OF THE CONTRACT.

BASES SHALL BE EXCAVATED BY USE OF A CIRCULAR AUGER.

TOP SURFACES OF CONCRETE BASES SHALL BE TROWEL FINISHED SMOOTH AND LEVEL.

CONDUIT SIZES AND LOCATIONS SHALL BE AS SHOWN ON THE PLANS.

THE FINAL OR TERMINATING CONCRETE BASE IN A CONDUIT RUN SHALL HAVE A 6" EXIT STUB INSTALLED FOR FUTURE CABLING USE. THE EXIT STUB SHALL BE SIZED AS USED THROUGHOUT THE CONDUIT RUN AS SHOWN AT THE ENTRANCE OF THE BASE.

MINIMUM BENDING RADIUS OF CONDUIT IS EQUAL TO 6 X THE DIAMETER.

CONDUIT HEIGHT ABOVE CONCRETE BASES SHALL BE 1 INCH. ALL METALLIC CONDUIT ENDS SHALL BE REAMED AND THREADED.

ALL CONDUIT ENDS AT THE TOP OF CONCRETE BASES SHALL BE CAPPED IF METALLIC OR PLUGGED IF NONMETALLIC IMMEDIATELY AFTER PLACEMENT AND BEFORE CONCRETE IS POURED. CONDUITS IN WHICH WIRE OR CABLE IS NOT INSTALLED SHALL REMAIN CAPPED OR PLUGGED.

GENERAL NOTES (CONTINUED)

BELL ENDS SHALL BE INSTALLED ON ALL PVC CONDUIT EXPOSED AT THE TOP OF CONCRETE BASES BEFORE INSTALLATION OF CABLE OR WIRE.

ENDS OF CONDUIT INSTALLED BELOW GRADE FOR FUTURE USE SHALL BE CAPPED IF METALLIC OR PLUGGED IF NONMETALLIC.

WHEN REQUIRED TO CONNECT NONMETALLIC CONDUIT TO METALLIC CONDUIT, ONLY ADAPTER FITTINGS, U.L. LISTED FOR ELECTRICAL USE, SHALL BE USED.

IF A BASE REQUIRES A DEEP FORM BECAUSE OF LOOSE DIRT OR FILL, THE FORM SHALL BE REMOVED BEFORE BACKFILLING AROUND THE BASE. BACKFILL SHALL BE TAMPED TIGHT AGAINST THE BARE CONCRETE BASE IN LAYERS OF 1 FOOT OR LESS.

A NO. 4 AWG, STRANDED COPPER EQUIPMENT GROUNDING CONDUCTOR SHALL BE EXOTHERMICALLY WELDED TO THE EQUIPMENT GROUNDING ELECTRODE (GROUND ROD) FOR TYPE 2 AND TYPE 5 BASES.

THE EQUIPMENT GROUNDING CONDUCTOR SHALL BE FURNISHED AND INSTALLED TO ENTER THE BASE OF THE TYPE 2 AND TYPE 5 BASES THROUGH A 1 INCH CONDUIT INSTALLED FOR GROUNDING PURPOSES, LEAVING A 4 FOOT COIL OF WIRE ABOVE THE CONCRETE BASE. THE EQUIPMENT GROUNDING CONDUCTOR SHALL BE NEATLY COILED AND THE COILS TIED TOGETHER.

ANCHOR RODS SHALL BE THREADED 12" IN LENGTH ON EACH END OF THE ROD. ANCHOR RODS SHALL BE MANUFACTURED IN ACCORDANCE WITH SECTION 654.2.1 AND 641.2.2 OF THE STANDARD SPECIFICATIONS, ASTM A-449, OR ASTM A-687 (GRADE 105).

WASHERS AND LOCK WASHERS ARE REQUIRED ON ALL ANCHOR RODS.

WHEN ANCHOR RODS USING THE ALTERNATE "L" BEND ARE FURNISHED, THE 4" "L" BEND SHALL BE IN ADDITION TO THE SPECIFIED ANCHOR ROD BAR LENGTH. THE "L" BEND END SHALL NOT BE THREADED.

ANCHOR RODS SHALL BE INSTALLED WITH MISALIGNMENTS OF LESS THAN 1:40 FROM VERTICAL.

WELDING OF THE ANCHOR RODS TO THE CAGE IS UNACCEPTABLE. TIE WIRES SHALL BE USED.

BAR STEEL REINFORCEMENT SHALL BE COATED WITH POWDERED EPOXY RESIN IN ACCORDANCE WITH SECTION 505 OF THE STANDARD SPECIFICATIONS (LATEST EDITION).

(1) THE MINIMUM DEPTH OF CONDUIT EXITING THE CONCRETE BASE AND INSTALLED BELOW THE TRAVELED WAY SHALL BE 24 INCHES. THE MINIMUM DEPTH OF CONDUIT EXITING THE CONCRETE BASE THAT IS NOT INSTALLED BELOW THE TRAVELED WAY SHALL BE 18 INCHES. THE MAXIMUM DEPTH OF ALL CONDUIT SHALL BE 36 INCHES EXCEPT WITH WRITTEN APPROVAL BY THE ENGINEER.

(2) (4) 1" DIA. X 3'-6" ANCHOR RODS.

(3) (4) 1" DIA. X 5'-0" ANCHOR RODS.

(4) (6) NO. 6 X 6'-8" BAR STEEL REINFORCEMENT.

(5) (7) NO. 4 X 5'-1" BAR STEEL REINFORCEMENT @ 1'-0" C-C.

(6) (4) 1" DIA. X 3'-6" ANCHOR RODS.

(7) (6) NO.4 X 4'-8" BAR STEEL REINFORCEMENT.

(8) (5) NO. 4 X 5'-1" BAR STEEL REINFORCEMENT @ 1'-0" C-C.

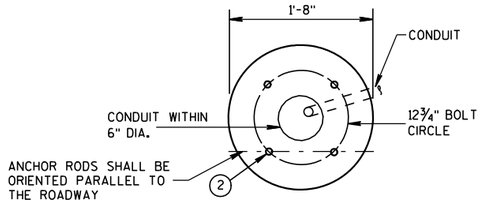

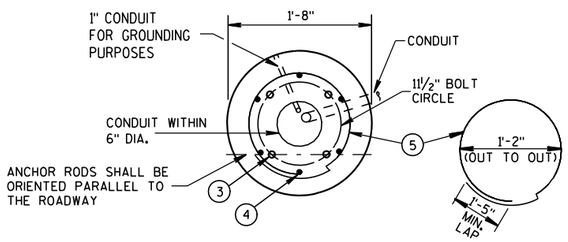

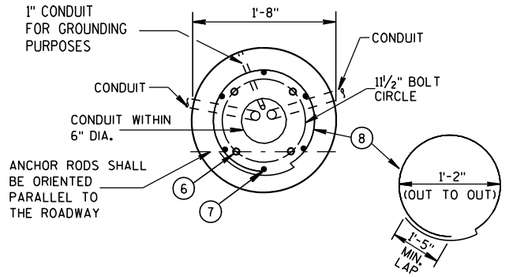

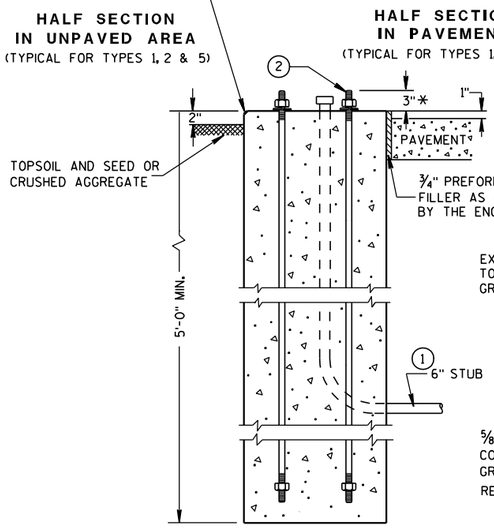

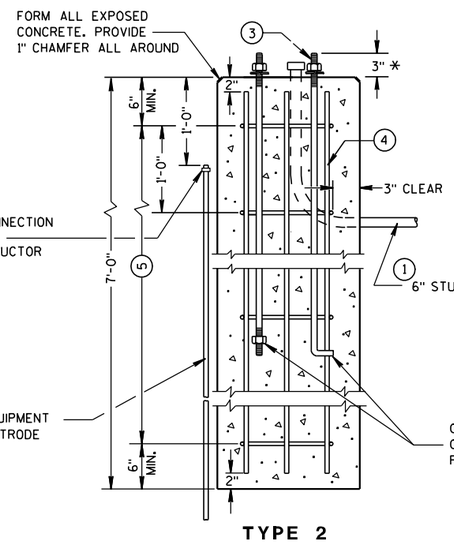

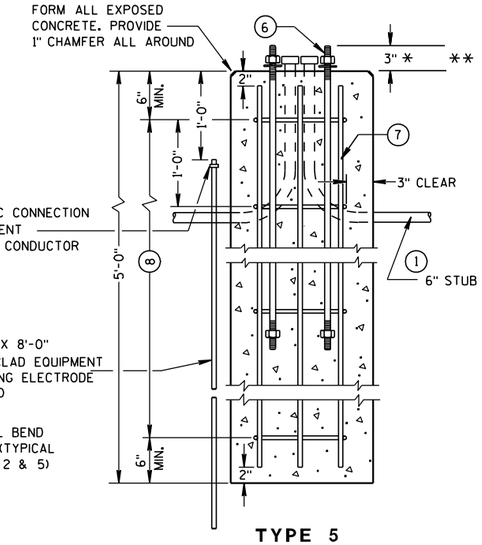

CONCRETE BASES

* ANY ANCHOR ROD PROJECTION SHORTER THAN 2¾" OR LONGER THAN 3¼" SHALL REQUIRE THE BASE TO BE REMOVED AND REPLACED AT THE CONTRACTORS EXPENSE.

** FOR NONBREAKAWAY INSTALLATIONS, 4½" ± ANCHOR ROD PROJECTION WITH THE USE OF LEVELING NUTS. RODENT SCREEN REQUIRED.

CONCRETE BASES, TYPES 1, 2 & 5

STATE OF WISCONSIN
DEPARTMENT OF TRANSPORTATION

APPROVED

3/3/10	/S/ Joanna L. Bush
DATE	STATE ELECTRICAL ENGINEER FOR HIGHWAYS

FHWA

6

S.D.D. 9 C 2-6

GENERAL NOTES

DETAILS OF CONSTRUCTION, MATERIALS AND WORKMANSHIP NOT SHOWN ON THIS DRAWING SHALL CONFORM TO THE PERTINENT REQUIREMENTS OF THE CONTRACT.

FOUR (4) BOLTS SHALL BE FURNISHED WITH EACH TRANSFORMER BASE. BOLTS SHALL BE 1" DIAMETER, 4" IN LENGTH, WITH WASHERS, LOCK WASHERS AND NUTS. BOLTS, NUTS AND WASHERS SHALL BE MANUFACTURED IN ACCORDANCE WITH SECTION 641.2.2 OF THE STANDARD SPECIFICATIONS, ASTM A-325, (92,000 YIELD) HEAVY HEX NUT AND BE GALVANIZED IN ACCORDANCE WITH ASTM A-153, CLASS C.

LEVELING SHIMS, IF NEEDED, SHALL BE DESIGNED FOR THE PURPOSE AND USED UNDER CAST BASES WHEN PLUMBING POLES OR STANDARDS DURING INSTALLATION. THE USE OF WASHERS IN LIEU OF PROPER LEVELING SHIMS IS NOT ACCEPTABLE.

SHIM LENGTH SHALL BE LONG ENOUGH TO COMPLETELY COVER THE AREA UNDER THE LENGTH AND WIDTH OF THE BASE MOUNTING FLANGE.

DOUBLE NUTTING IS NOT ACCEPTABLE FOR LEVELING OR MOUNTING PURPOSES.

A NEMA APPROVED AND U.L. LISTED MECHANICAL CONNECTOR (LUG) AL/CU RATED AND SIZED TO ACCEPT #10 AWG STRANDED WIRE, SHALL BE FURNISHED AND INSTALLED IN THE PEDESTAL AND TRANSFORMER BASES.

THE MECHANICAL CONNECTOR SHALL BE INSTALLED USING A 1/4" - 20 (TPI) STAINLESS STEEL HEX HEAD BOLT OF SUFFICIENT LENGTH TO FIRMLY ATTACH THE LUG TO THE BASE.

SHOULD THE MANNER OF ATTACHMENT OF THE LUG REQUIRE WASHERS, HEX NUTS, LOCK WASHER - THEY SHALL BE STAINLESS STEEL AS IS THE BOLT. THE MANNER OF ATTACHMENT SHALL NOT BLOCK ACCESSIBILITY TO WIRE PLACEMENT IN THE CONNECTOR.

PEDESTAL BASE COLLAR THREADING SHALL BE TAPERED AND IN ACCORDANCE WITH NATIONAL PIPE THREADING DIMENSIONS.

BASE COLLAR THREADING SHALL EXTEND INTO THE BASE COLLAR WITH SUFFICIENT DEPTH TO ACCEPT THE INSTALLATION OF TRAFFIC SIGNAL STANDARDS TO A DEPTH OF 1 1/2", THEN TIGHTENING TO A POINT OF BEING IMMOVABLE.

THE ACCESS DOOR SHALL BE OF THE SAME MATERIAL AS THE BASE.

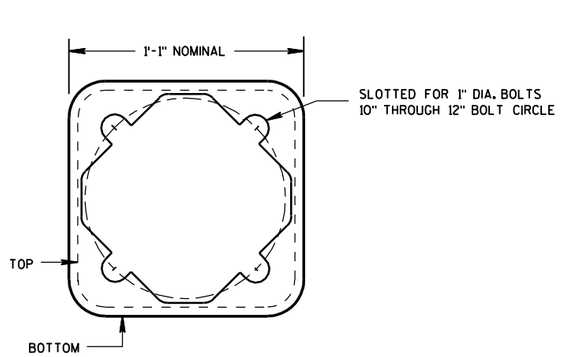

BOTTOM VIEW
(TRANSFORMER BASE)

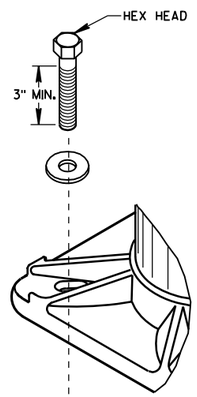

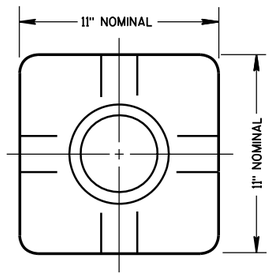

TOP VIEW
(PEDESTAL BASE)

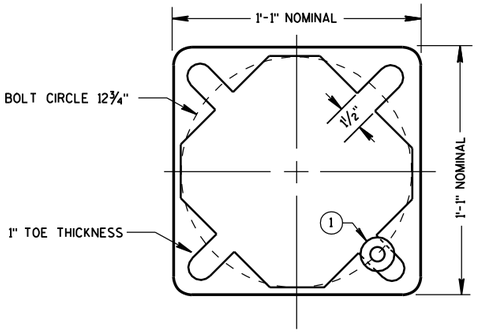

BOTTOM VIEW
(PEDESTAL BASE)

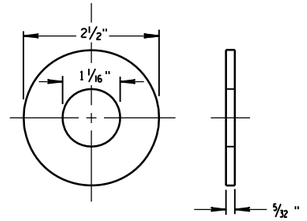

ZINC COATED STEEL WASHER
TO BE PROVIDED BY THE CONTRACTOR

PEDESTAL BASE WASHER (1)

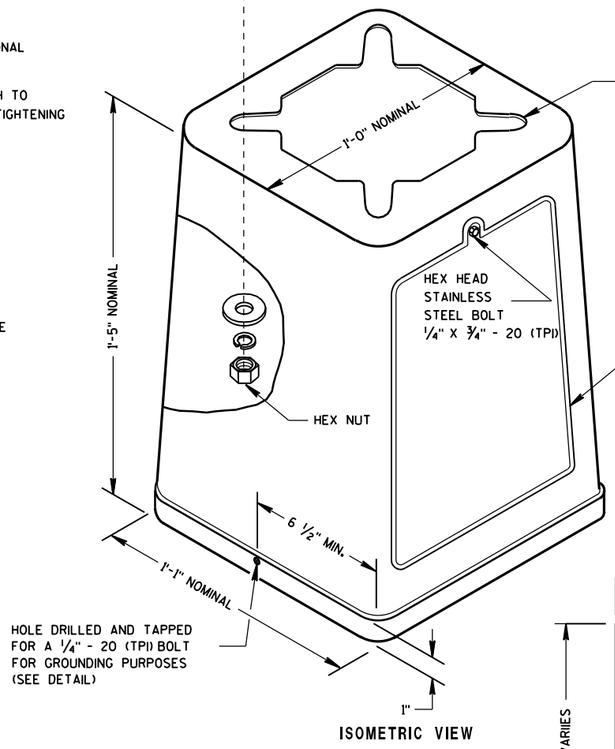

ISOMETRIC VIEW

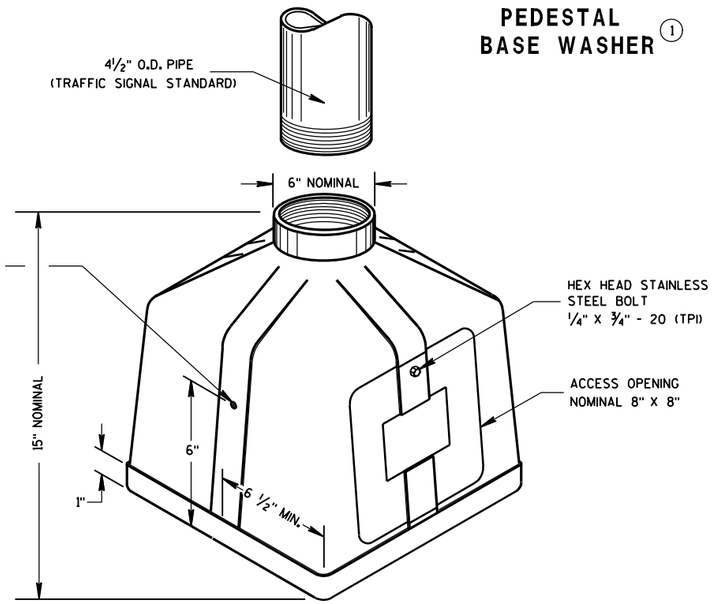

ISOMETRIC VIEW
PEDESTAL BASE

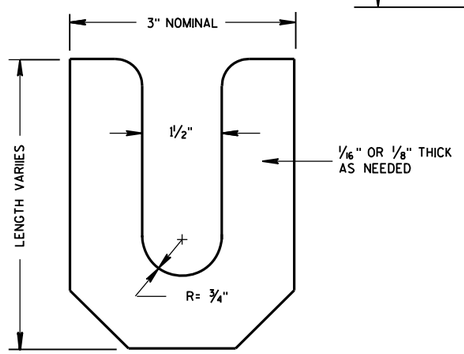

LEVELING SHIM

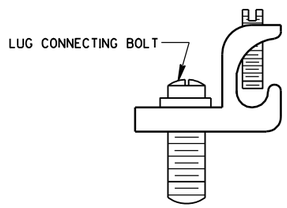

TYPICAL MECHANICAL CONNECTOR LUG
TO BE FURNISHED WITH EACH BASE

TRANSFORMER BASE
INTENDED FOR USE WITH TYPE 2, 3, 4, 5 & 6 POLES

TRANSFORMER/PEDESTAL BASES

STATE OF WISCONSIN
DEPARTMENT OF TRANSPORTATION

APPROVED
10/27/09 — DATE
/S/ Joanna L. Bush — STATE ELECTRICAL ENGINEER FOR HIGHWAYS
FHWA

6

S.D.D. 9 C 3-3

CONTROL CABINET BASE TYPE	DIMENSIONS				C.Y. CONCRETE (APPROX.)
	H	I	J	K	
TYPE 6 - 30" CABINET	34"	60"	10"	17"	.64
TYPE 7 - 38" CABINET	42"	60"	10"	21"	.93
TYPE 8 - 38" CABINET	42"	72"	12"	21"	1.29
TYPE 9 - VARIABLE	54"	72"	14"	27"	1.56
TYPE 10 - POST MOUNT	AS SHOWN				.65 *

* INCLUDES MAINTENANCE PLATFORM.

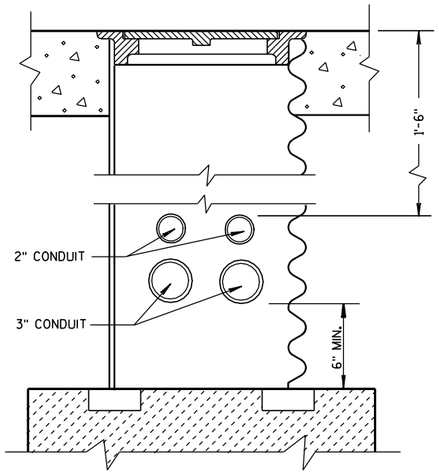

CONDUIT LOCATIONS IN 24" X 36" PULL BOX

(LEADING TO CONTROLLER CABINET BASE TYPE 6, 7, 8 AND 9)

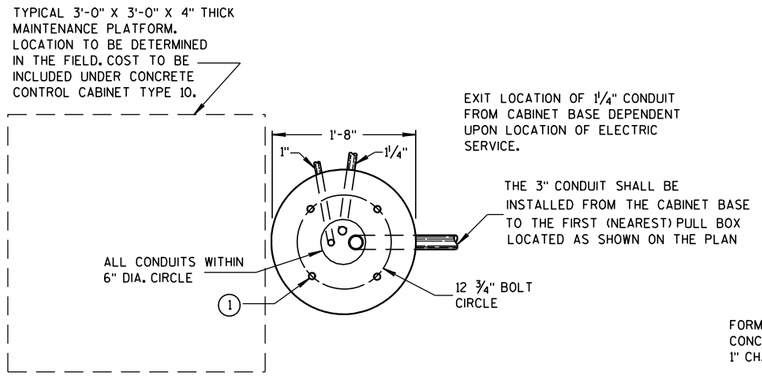

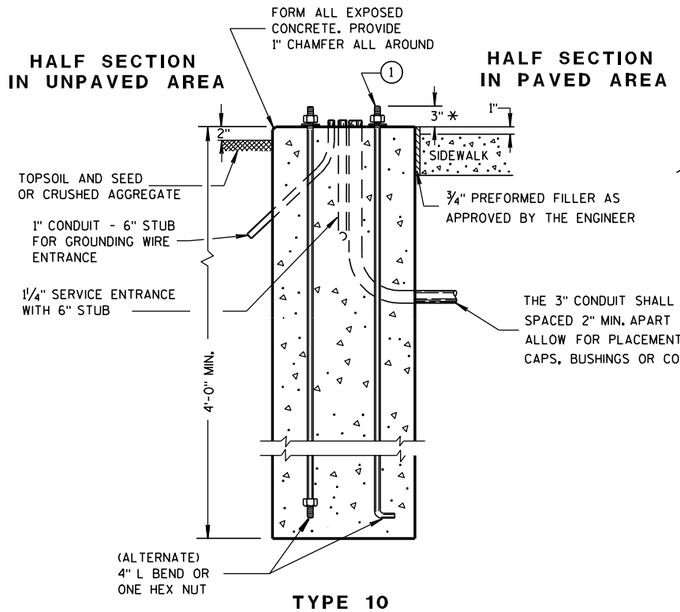

TYPE 10

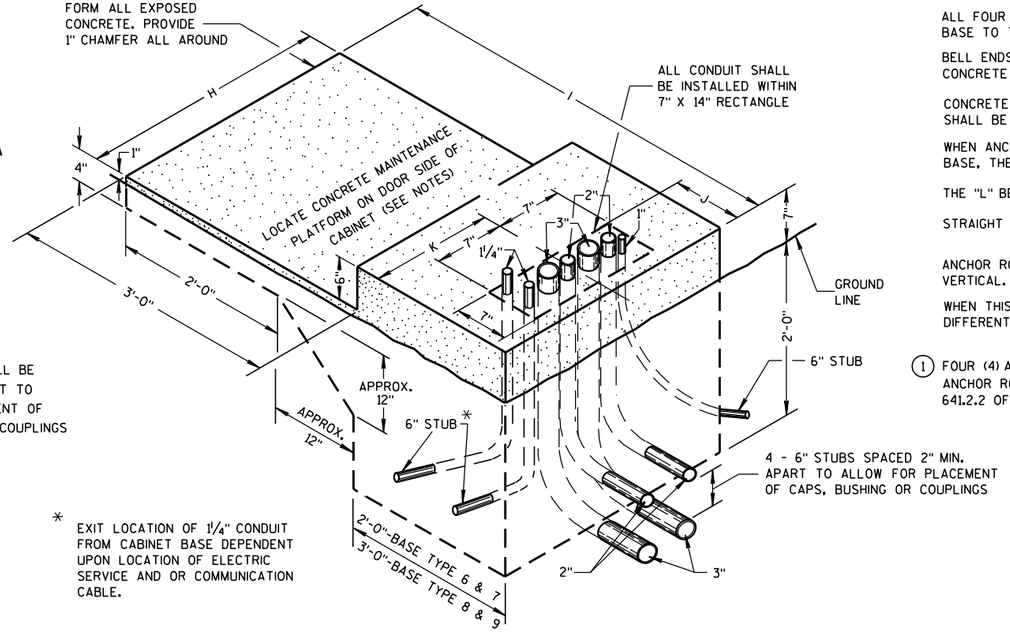

TYPE 6, 7, 8 AND 9 (ISOMETRIC VIEW)

* ANY ANCHOR ROD PROJECTION SHORTER THAN 2¾" OR LONGER THAN 3¼" SHALL REQUIRE THE BASE TO BE REMOVED AND REPLACED AT THE CONTRACTORS EXPENSE.

* EXIT LOCATION OF 1¼" CONDUIT FROM CABINET BASE DEPENDENT UPON LOCATION OF ELECTRIC SERVICE AND OR COMMUNICATION CABLE.

GENERAL NOTES

DETAILS OF CONSTRUCTION, MATERIALS AND WORKMANSHIP NOT SHOWN ON THIS DRAWING SHALL CONFORM TO THE PERTINENT REQUIREMENTS OF THE CONTRACT.

INSTALL FOUR ½ INCH MINIMUM DIAMETER X 4 INCH MINIMUM LENGTH APPROVED CONCRETE MASONRY ANCHORS TO ANCHOR THE CABINET TO TYPE 6, 7, 8, AND 9 BASES. THE ANCHOR STUDS SHALL BE LOCATED AS DIRECTED BY THE ENGINEER TO PROPERLY ANCHOR THE CONTROL CABINET TO THE BASE.

WHEN REQUIRED TO CONNECT NONMETALLIC CONDUIT TO METALLIC CONDUIT, ONLY ADAPTER FITTINGS, U.L. LISTED FOR ELECTRICAL USE, SHALL BE USED.

CONDUIT HEIGHT ABOVE THE CONCRETE BASE SHALL BE 1 INCH.

DEPTH OF CONDUIT INSTALLED BELOW THE TRAVELED WAY SHALL BE 24 INCHES MINIMUM AND 36 INCHES MAXIMUM.

DEPTH OF CONDUIT INSTALLED THAT IS NOT BELOW THE TRAVELED WAY SHALL BE 18 INCHES MINIMUM AND 36 INCHES MAXIMUM.

ANY EXCEPTION TO THE MAXIMUM DEPTH SHALL BE ONLY WITH THE WRITTEN APPROVAL OF THE ENGINEER.

CONTROL CABINET BASE TOP SURFACES SHALL BE TROWEL FINISHED SMOOTH AND LEVEL.

WHEN A TYPE 10 CONTROL CABINET BASE IS USED TO POST MOUNT A CONTROL CABINET, A 36" SQUARE 4" THICK CONCRETE MAINTENANCE PLATFORM SHALL BE REQUIRED ON THE DOOR SIDE OF THE CABINET. THE TOP 1 INCH SHALL BE ABOVE FINISHED GRADE AND BE BROOM FINISHED AND LEVEL.

MAINTENANCE PLATFORMS ARE NOT REQUIRED WHEN THE SURROUNDING AREA IS PAVED.

MINIMUM BENDING RADIUS OF CONDUIT = 6 X THE DIAMETER.

ALL METALLIC CONDUIT ENDS SHALL BE REAMED AND THREADED.

ALL CONDUIT ENDS AT THE TOP OF CONCRETE BASES SHALL BE CAPPED IF METALLIC OR PLUGGED IF NONMETALLIC IMMEDIATELY AFTER PLACEMENT AND BEFORE CONCRETE IS POURED. CONDUITS IN WHICH WIRE OR CABLE IS NOT BEING INSTALLED SHALL REMAIN CAPPED OR PLUGGED.

ALL FOUR (TWO INCH AND THREE INCH) CONDUIT SHALL BE INSTALLED FROM THE CABINET BASE TO THE FIRST (NEAREST PULL BOX LOCATED AS SHOWN ON THE PLANS.

BELL ENDS SHALL BE INSTALLED ON ALL PVC CONDUIT EXPOSED AT THE TOP OF THE CONCRETE BASE BEFORE INSTALLATION OF CABLE OR WIRE.

CONCRETE FORM DEPTH BELOW FINISHED GRADE SHALL BE 6" MAXIMUM. CONCRETE FORMS SHALL BE REMOVED AFTER CONCRETE HAS SET.

WHEN ANCHOR RODS USING THE ALTERNATE L BEND ARE FURNISHED FOR THE TYPE 10 BASE, THE 4" L BEND SHALL BE IN ADDITION TO THE SPECIFIED ANCHOR ROD BAR LENGTH.

THE "L" BEND SHALL NOT BE THREADED.

STRAIGHT ANCHOR RODS SHALL BE THREADED 12" IN LENGTH ON EACH END OF THE ROD.

ANCHOR RODS SHALL BE INSTALLED WITH MISALIGNMENTS OF LESS THAN 1:40 FROM VERTICAL.

WHEN THIS DRAWING IS USED FOR STREET LIGHTING CABINET BASES, CONDUIT MAY BE DIFFERENT AS SHOWN ON THE PLAN OR AS DIRECTED BY THE ENGINEER.

(1) FOUR (4) ANCHOR RODS, 1" DIA. X 3'-6"
ANCHOR RODS SHALL BE MANUFACTURED IN ACCORDANCE WITH SECTION 654.2.1 AND 641.2.2 OF THE STANDARD SPECIFICATIONS.

CONCRETE CONTROL CABINET BASES

STATE OF WISCONSIN
DEPARTMENT OF TRANSPORTATION

APPROVED

3/3/10
DATE

/S/ Joanna L. Bush
STATE ELECTRICAL ENGINEER FOR HIGHWAYS

FHWA

6

S.D.D. 9 C 5-7

6

S.D.D. 9 C 5-7

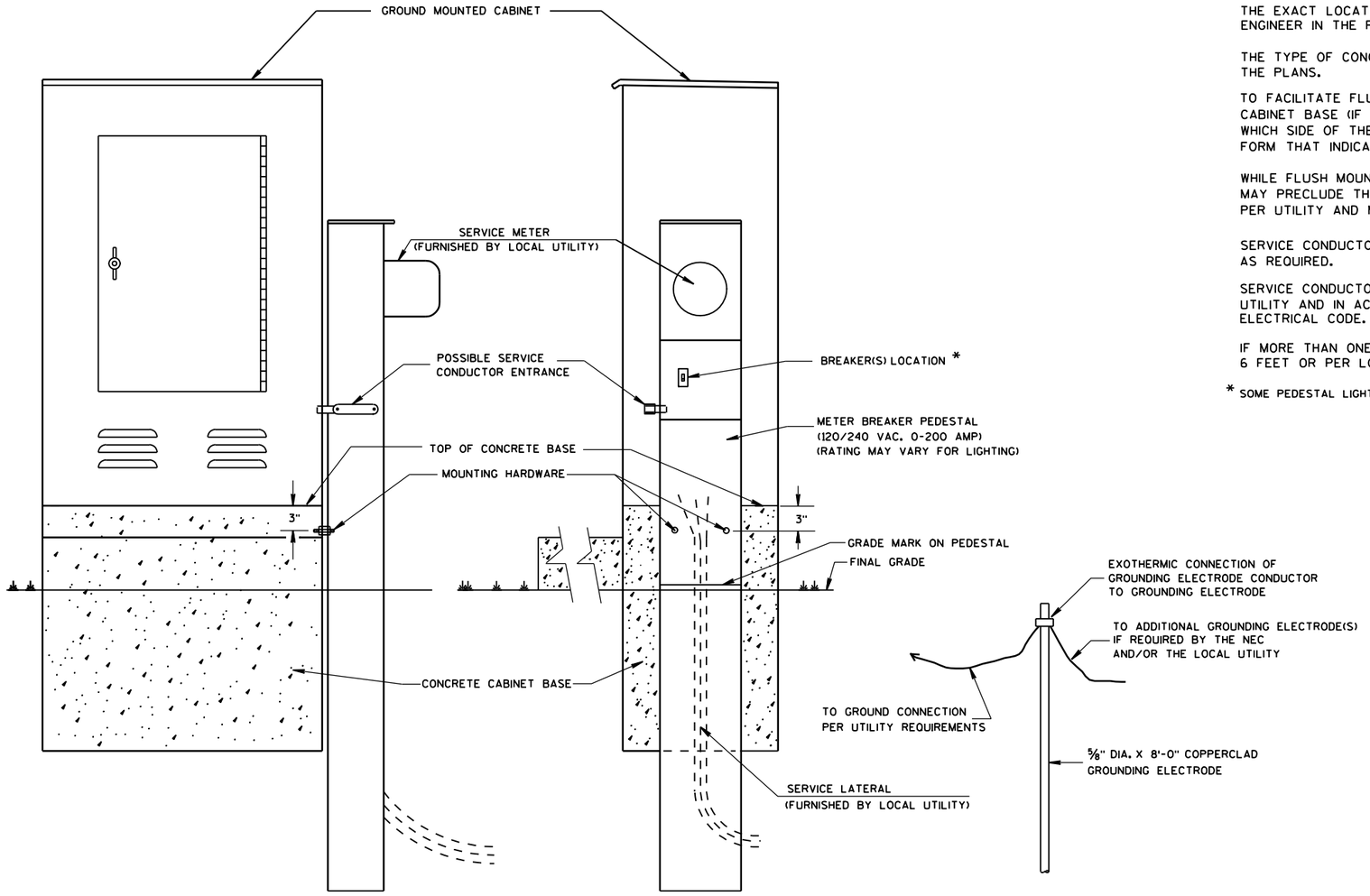

TYPICAL CABINET SERVICE INSTALLATION

GENERAL NOTES

DETAILS OF CONSTRUCTION, MATERIALS AND WORKMANSHIP NOT SHOWN ON THIS DRAWING SHALL CONFORM TO THE PERTINENT REQUIREMENTS OF THE CONTRACT.

THE EXACT LOCATION OF THE METER BREAKER PEDESTAL SHALL BE DETERMINED BY THE ENGINEER IN THE FIELD.

THE TYPE OF CONCRETE CABINET BASE TO BE INSTALLED SHALL BE AS CALLED FOR IN THE PLANS.

TO FACILITATE FLUSH MOUNTING OF THE METER BREAKER PEDESTAL AGAINST THE SIDE OF THE CABINET BASE (IF FLUSH MOUNTING POSSIBLE. CONFER WITH THE LOCAL UTILITY TO DETERMINE WHICH SIDE OF THE CONCRETE BASE THE ELECTRICAL SERVICE LATERAL WILL APPROACH. THEN FORM THAT INDICATED SIDE FOR FULL SIDE DEPTH.

WHILE FLUSH MOUNTING IS THE MOST DESIRABLE MOUNTING CONFIGURATION UTILITY REQUIREMENTS MAY PRECLUDE THIS OPTION. CONTRACTOR MUST PROVIDE UTILITY APPROVED PEDESTAL AND INSTALL PER UTILITY AND MANUFACTURERS REQUIREMENTS.

SERVICE CONDUCTOR ENTRANCES SHALL BE RIGID METALLIC CONDUIT, NIPPLES AND/OR CONDULETS AS REQUIRED.

SERVICE CONDUCTOR ENTRANCES SHALL BE SIZED AND LOCATED AS REQUIRED BY THE LOCAL UTILITY AND IN ACCORDANCE WITH APPROPRIATE ARTICLES OF THE LATEST ACCEPTED NATIONAL ELECTRICAL CODE.

IF MORE THAN ONE GROUNDING ELECTRODE IS REQUIRED, THE DISTANCE APART SHALL BE 6 FEET OR PER LOCAL UTILITY REGULATIONS.

* SOME PEDESTAL LIGHTING PLANS SHOW MAIN LUGS ONLY.

CABINET SERVICE INSTALLATION (METER BREAKER PEDESTAL)	
STATE OF WISCONSIN DEPARTMENT OF TRANSPORTATION	
APPROVED	
10/27/09 DATE	/S/ Joanna L. Bush STATE ELECTRICAL ENGINEER FOR HIGHWAYS
FHWA	

6

S.D.D. 9 D 1-4

6

S.D.D. 9 D 1-4

*RISE FOR 4' ARM SHALL BE 2'-0".

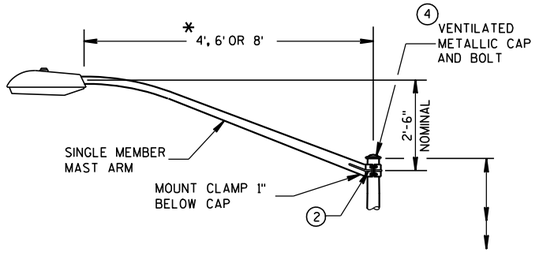

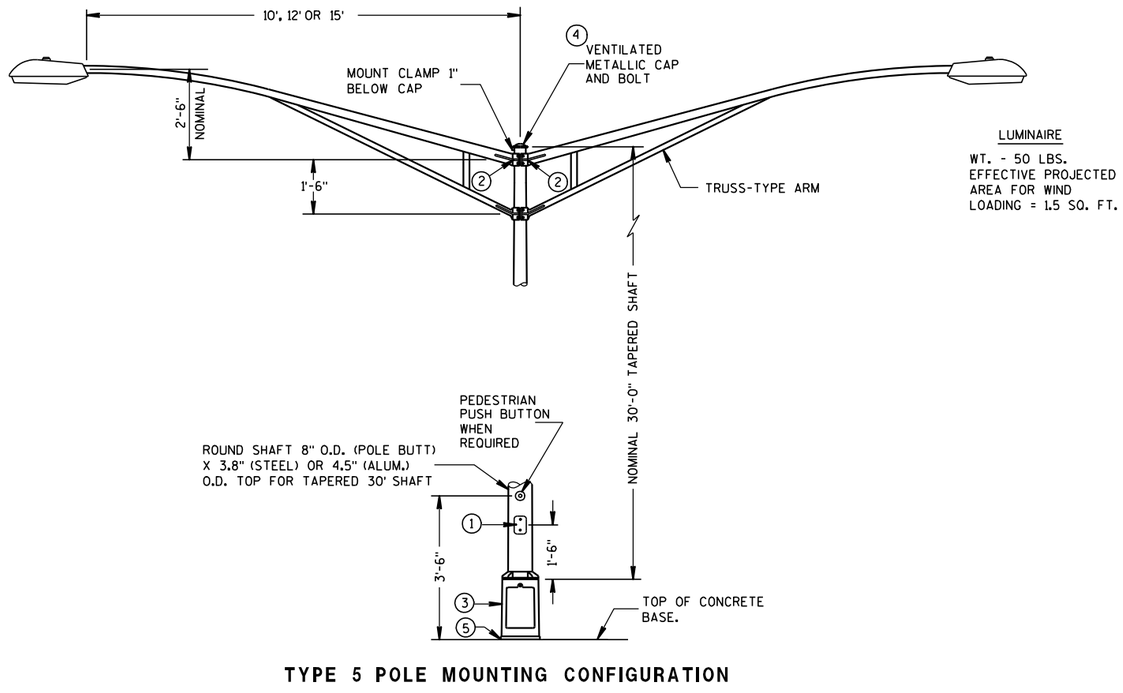

LUMINAIRE

WT. - 50 LBS.
EFFECTIVE PROJECTED AREA FOR WIND LOADING = 1.5 SQ. FT.

TYPE 5 POLE MOUNTING CONFIGURATION
(MAXIMUM LOAD)
LIGHTING ONLY

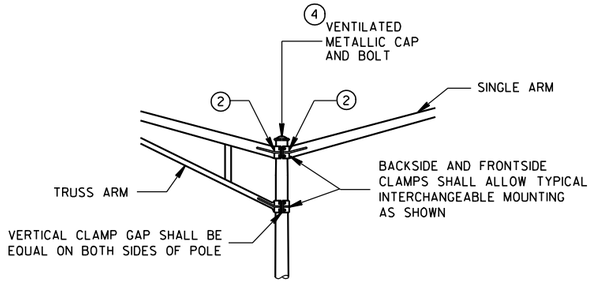

INTERCHANGEABLE MOUNTING DETAIL

GENERAL NOTES

DETAILS OF CONSTRUCTION, MATERIALS AND WORKMANSHIP NOT SHOWN ON THIS DRAWING SHALL CONFORM TO THE PERTINENT REQUIREMENTS OF THE CONTRACT.

ALL TYPE 5 POLE MOUNTINGS SHALL BE DESIGNED TO INCLUDE TWIN 15' ARMS WITH LUMINAIRES.

POLES SHALL BE GALVANIZED STEEL OR ALUMINUM, AS CALLED FOR IN THE CONTRACT.

TYPE 5 ALUMINUM POLES SHALL BE CONSTRUCTED OF 6063-T6 ALUMINUM ALLOY. SLEEVING INSIDE THE POLE IS NOT ACCEPTABLE.

THE TYPE 5 ALUMINUM POLES SHALL HAVE A MINIMUM WALL THICKNESS OF 0.188".

TYPE 5 STEEL POLES SHALL HAVE A MINIMUM WALL THICKNESS OF U.S. STANDARD 11 GAGE (.1196").

THE SLIPFITTER END OF THE LUMINAIRE MAST ARM SHALL BE A NOMINAL 2⅜ INCHES IN OUTSIDE DIAMETER. THE STRAIGHT PORTION OF THE SLIPFITTER END OF THE LUMINAIRE ARM SHALL BE A NOMINAL 12 INCHES IN LENGTH.

WHEN TRANSFORMER BASES ARE USED, WIRE CONEECTIONS SHALL BE MADE IN THE TRANSFORMER BASE.

1. 4" x 6" REINFORCED HANDHOLE & COVER ASSEMBLY WITH 2 (TWO) ¼" X ¾" - 20 TPI HEX HEAD STAINLESS STEEL BOLTS.
2. GROMMETS, 1" CHASE NIPPLES OR 1" CLOSE CONDUIT NIPPLES WITH BUSHINGS SHALL BE PROVIDED FOR 1⅜" HOLE IN POLE SHAFT FOR WIRING.
3. CAST ALUMINUM TRANSFORMER BASE, WHEN REQUIRED.
4. FURNISH AND INSTALL VENTILATED, CAST, METALLIC (ALUMINUM ALLOY) CAPS. FASTEN CAPS WITH ONE (1) ¼" X ¾" - 20 TPI STAINLESS STEEL, HEX HEAD BOLT.
5. SHIMMING, IF NEEDED, SHALL BE LOCATED BETWEEN THE CONCRETE FOUNDATION AND THE TRANSFORMER BASE.

6

6

S.D.D. 9 E 1-10d

S.D.D. 9 E 1-10d

POLE MOUNTINGS FOR LIGHTING UNITS, TYPE 5 (30 FEET)

STATE OF WISCONSIN
DEPARTMENT OF TRANSPORTATION

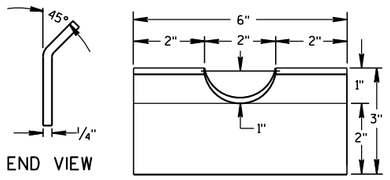

FRONT VIEW

RECTANGULAR CLAMP SHIM

(4 TO A SET)

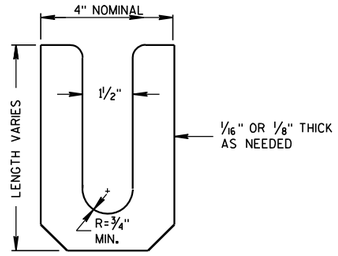

LEVELING SHIM (15)

SHALL BE ALUMINUM

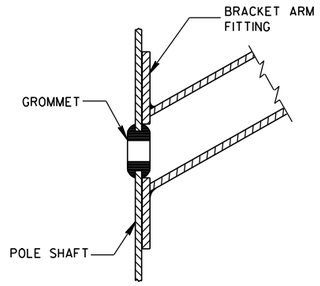

TYPICAL APPLICATION OF GROMMET IN POLE SHAFT

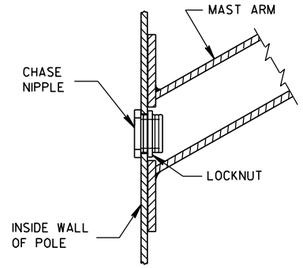

TYPICAL APPLICATION OF CHASE NIPPLE IN POLE SHAFT

GENERAL NOTES

CLAMP BOLT-NUT TIGHTENING TORQUE SHALL BE INDICATED BY INDENT STAMPING (1/2 INCH NUMERALS AND LETTERS) OR WEATHERPROOF PRINTING ON THE INSIDE OF THE CLAMP THAT IS WELDED TO THE ARM MEMBER.

(10.) 4.5" I.D. FOR LUMINAIRE MAST ARM CLAMP.
6.625" I.D. FOR TROMBONE MAST ARM CLAMP.

(11.) INDIVIDUAL BASE PLATE ANCHOR ROD COVERS. (4 REQUIRED)

(12.) BASE PLATE SLOTTED TO ACCEPT 11" THROUGH 12" BOLT CIRCLE USING 1" DIAMETER ANCHOR RODS.

(13.) OUTSIDE SHIM DIAMETER - (4.5" O.D. FOR LUMINAIRE MAST ARM)
(6.625" O.D. FOR TROMBONE MAST ARM)

(14.) VARIABLE SHIM THICKNESS - (0.10", 0.25", 0.35", 0.53" OR 0.70")

SHIM THICKNESS FOR TROMBONE MAST ARMS MAY BE TYPICALLY 0.25", 0.35", 0.53" OR 0.70".

SHIM THICKNESS FOR LUMINAIRE MAST ARMS MAY BE TYPICALLY 0.10", 0.25" OR 0.35".

SHIM MATERIAL SHALL BE ALUMINUM ALLOY.

SHIM THICKNESS SHALL BE IMPRESSED INTO EACH SHIM. NUMERALS SHALL BE 1/4" HIGH AND LEGIBLE.

THE CONTRACTOR SHALL SUBMIT TWO COPIES OF ALL SHIM SHOP DRAWINGS TO THE ENGINEER FOR APPROVAL.

(15.) LEVELING SHIMS, DESIGNED FOR THE PURPOSE, SHALL BE USED WHEN PLUMBING POLES. THE USE OF WASHERS IN LIEU OF PROPER LEVELING SHIMS IS NOT ACCEPTABLE. LEVELING SHIMS SHALL BE USED ONLY BETWEEN THE TOP OF THE CONCRETE BASE AND A METALLIC BASE PLATE.

SHIMS SHALL BE LONG ENOUGH AND WIDE ENOUGH TO COMPLETELY COVER THE AREA UNDER THE LENGTH AND WIDTH OF THE BASE MOUNTING FLANGE.

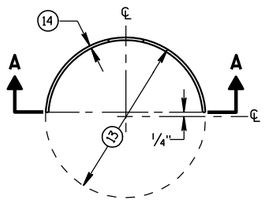

PLAN VIEW

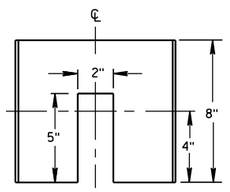

SECTION A-A

CIRCULAR CLAMP SHIM

(2 TO A SET)

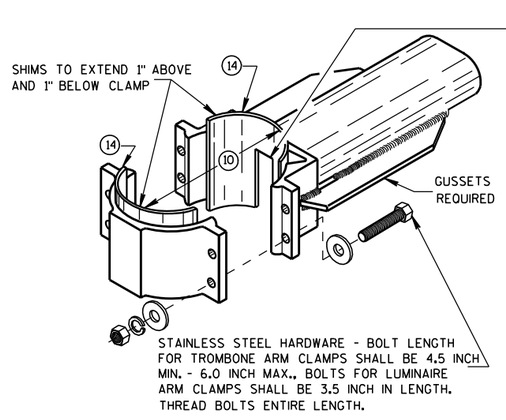

TYPICAL TROMBONE MAST ARM AND SINGLE LUMINAIRE MAST ARM MOUNTING CLAMP

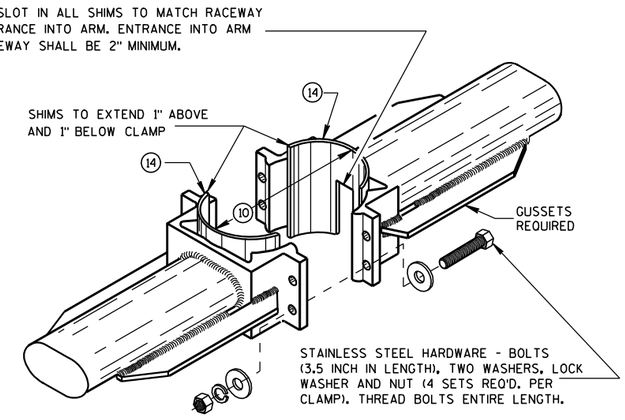

TYPICAL LUMINAIRE MAST ARM (DOUBLE) MOUNTING BRACKETS

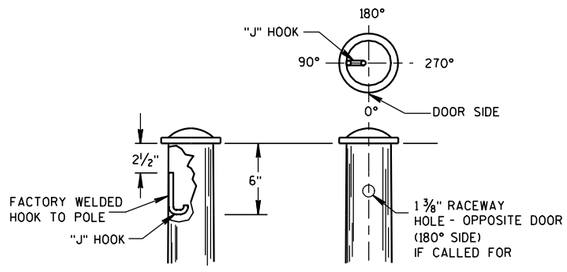

TYPICAL "J" HOOK LOCATION

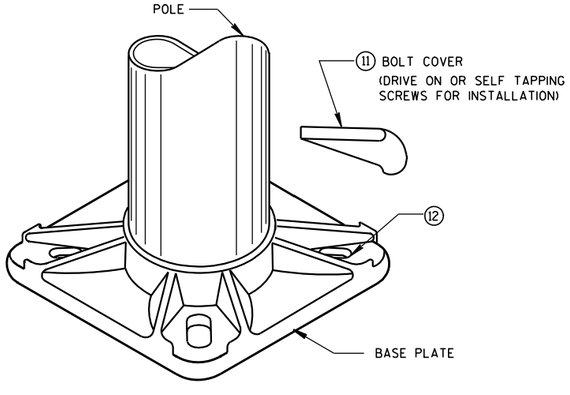

BASE PLATE

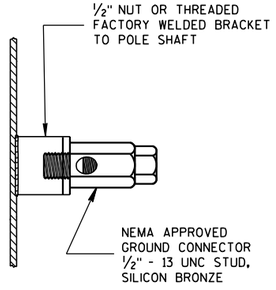

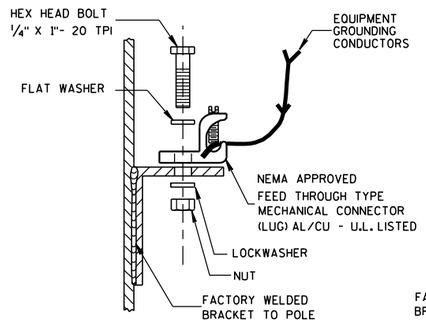

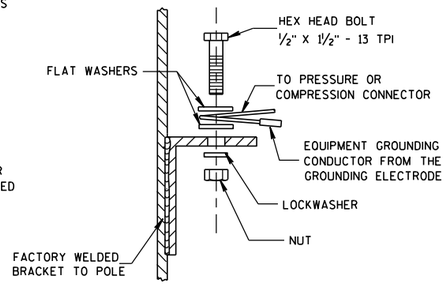

TYPICAL GROUNDING CONNECTIONS

NUT, BOLT AND WASHERS SHALL BE STAINLESS STEEL

HARDWARE DETAILS FOR POLE MOUNTINGS

STATE OF WISCONSIN
DEPARTMENT OF TRANSPORTATION

APPROVED

5/11/10 — DATE

/S/ John Corbin — STATE ELECTRICAL ENGINEER FOR HIGHWAYS

FHWA

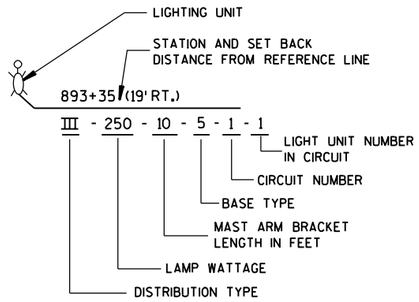

LIGHTING UNIT CODE
(TYPICAL)

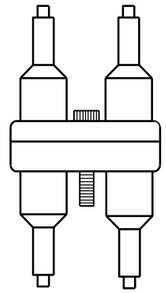

DETAIL "A"
DOUBLE POLE

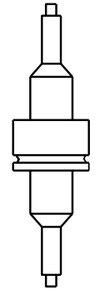

DETAIL "B"
SINGLE POLE

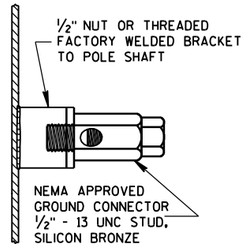

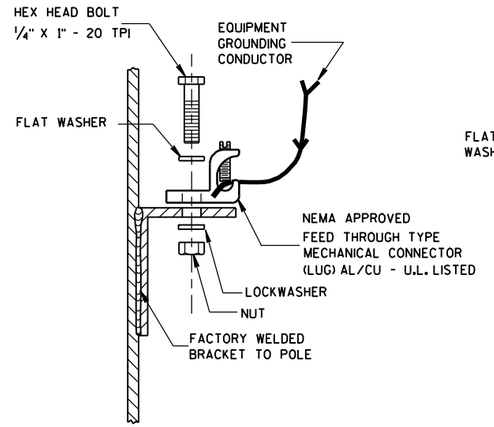

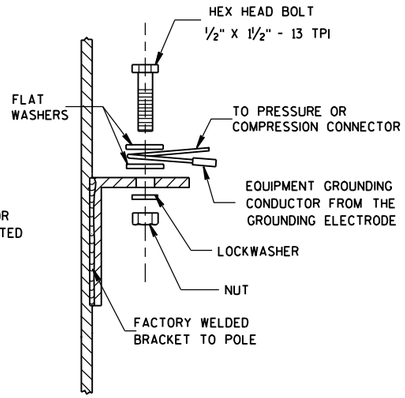

TYPICAL GROUNDING CONNECTIONS
NUT, BOLT, WASHERS AND LOCKWASHERS SHALL BE STAINLESS STEEL

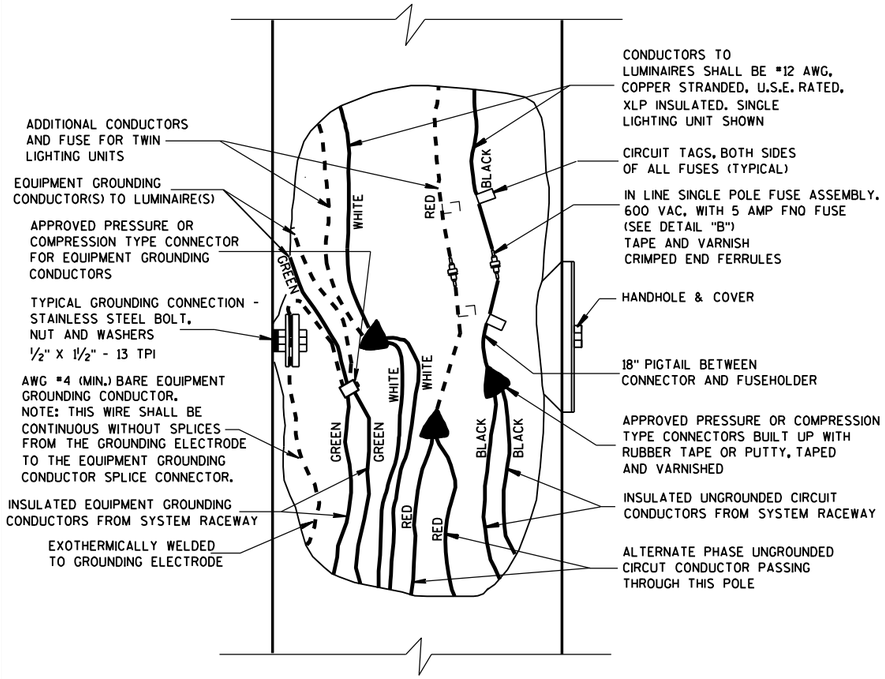

3 WIRE - 120, 240 OR 480 VAC (UNGROUNDED CONDUCTOR) WITH GROUNDED CONDUCTOR AND WITH EQUIPMENT GROUNDING CONDUCTOR

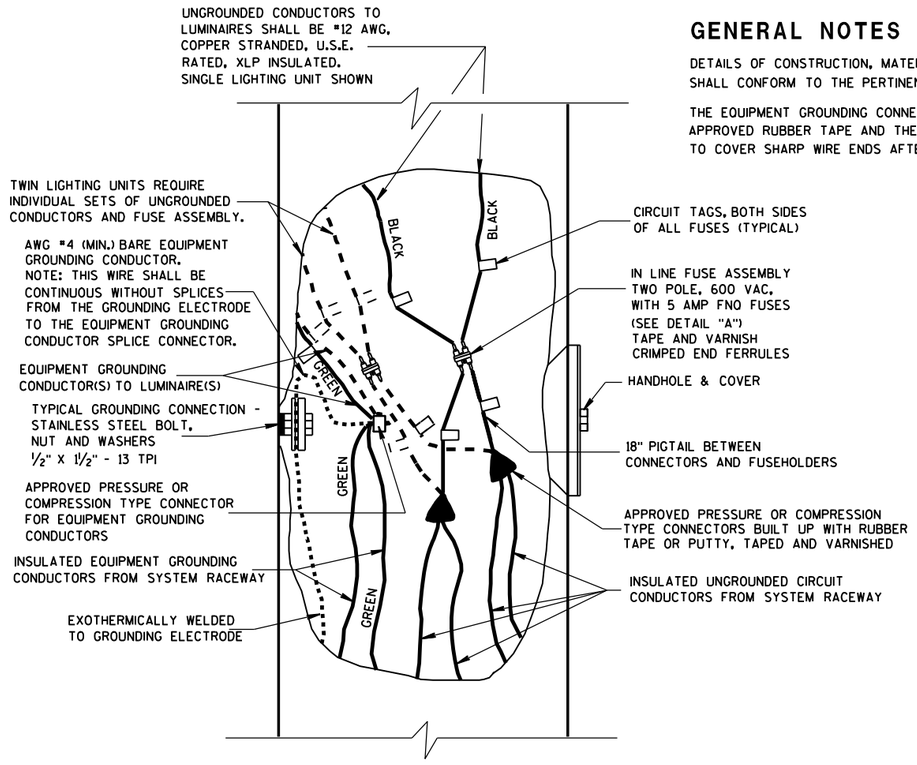

2 WIRE - 240 OR 480 VAC (UNGROUNDED CONDUCTORS) WITH EQUIPMENT GROUNDING CONDUCTOR

GENERAL NOTES

DETAILS OF CONSTRUCTION, MATERIALS AND WORKMANSHIP NOT SHOWN ON THIS DRAWING SHALL CONFORM TO THE PERTINENT REQUIREMENTS OF THE CONTRACT.

THE EQUIPMENT GROUNDING CONNECTOR SHALL BE TAPED WITH 3 WRAPS (MINIMUM) OF APPROVED RUBBER TAPE AND THEN 3 WRAPS (MINIMUM) OF APPROVED VINYL TAPE TO COVER SHARP WIRE ENDS AFTER THE CONNECTION IS COMPLETED.

NON-FREEWAY LIGHTING UNIT POLE WIRING

STATE OF WISCONSIN
DEPARTMENT OF TRANSPORTATION

APPROVED

10/14/08	/S/ Joanna L. Bush
DATE	STATE ELECTRICAL ENGINEER FOR HIGHWAYS

FHWA

6

S.D.D. 9 E 3-3

6

S.D.D. 9 E 3-3

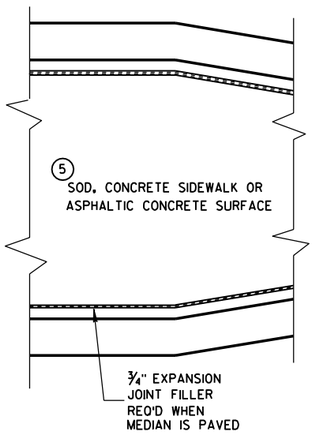

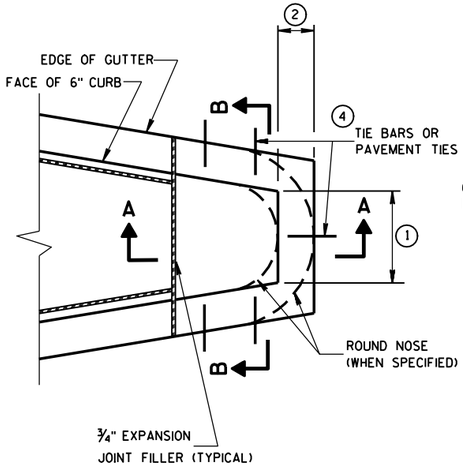

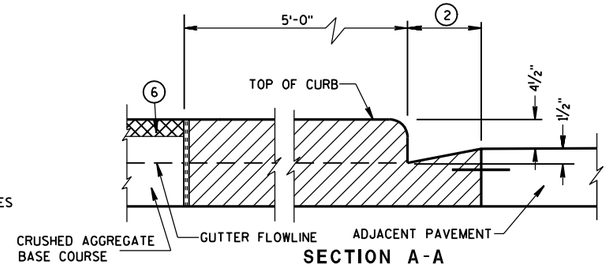

SECTION A-A

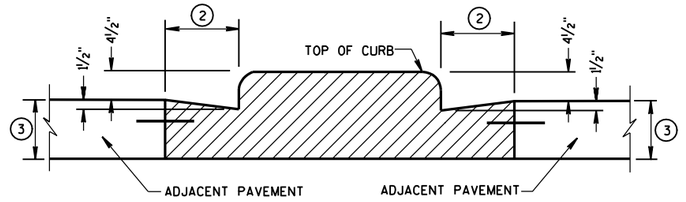

SECTION B-B

CONCRETE MEDIAN BLUNT NOSE DETAIL

GENERAL NOTES

DETAILS OF CONSTRUCTION, MATERIALS AND WORKMANSHIP NOT SHOWN ON THIS DRAWING SHALL CONFORM TO THE PERTINENT REQUIREMENTS OF THE STANDARD SPECIFICATIONS AND THE APPLICABLE SPECIAL PROVISIONS.

(1) SEE PLAN FOR MEDIAN NOSE WIDTH AND RADIUS (FOR ROUND NOSE ALTERNATE).

(2) WIDTH OF GUTTER TO MATCH EXISTING ADJACENT GUTTER OR AS SPECIFIED ELSEWHERE IN THE PLAN.

(3) DEPTH EQUAL TO ADJACENT PAVEMENT. ADJACENT PAVEMENT STRUCTURE DETAILS ARE SHOWN ON THE PLAN. TYPICAL OPTIONS ARE:

(1) NEW OR EXISTING CONCRETE PAVEMENT.

(2) ASPHALTIC CONCRETE PAVEMENT OVER NEW OR EXISTING CONCRETE BASE COURSE.

(3) ASPHALTIC CONCRETE PAVEMENT OVER CRUSHED AGGREGATE BASE COURSE.

(4) TIE BARS OR PAVEMENT TIES REQUIRED IN NEW CONCRETE PAVEMENT OR CONCRETE BASE COURSE. TIE BARS SHALL BE NO. 4 X 2'-0" SPACED AT 2'-0" C-C.

PAVEMENT TIES REQUIRED IN EXISTING CONCRETE BASE COURSE. PAVEMENT TIES SHALL BE NO. 6 X 1'-0" SPACED AT 3'-0" C-C INSTALLED ON A HORIZONTAL SKEW OF 6:1. THE DIRECTION OF SKEW SHALL ALTERNATE AFTER EVERY ONE OR TWO BARS.

(5) SURFACE TYPE AND DETAILS ARE SHOWN ELSEWHERE IN THE PLAN.

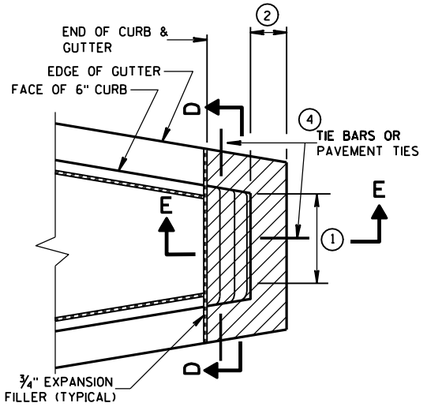

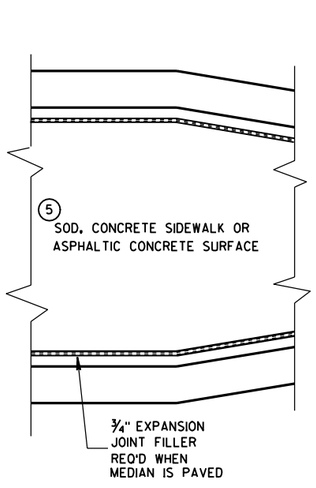

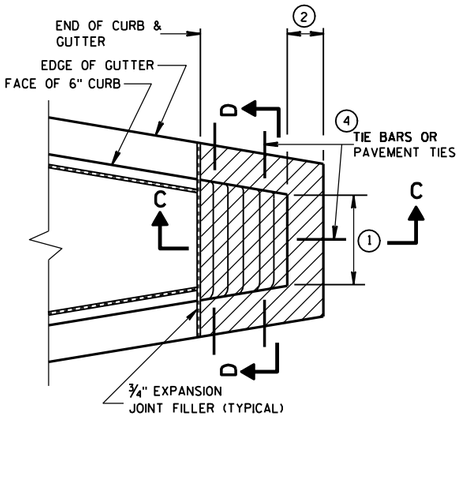

CONCRETE MEDIAN SLOPED NOSE TYPE 1

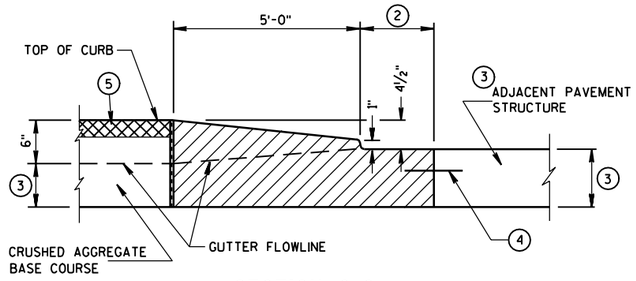

SECTION C-C

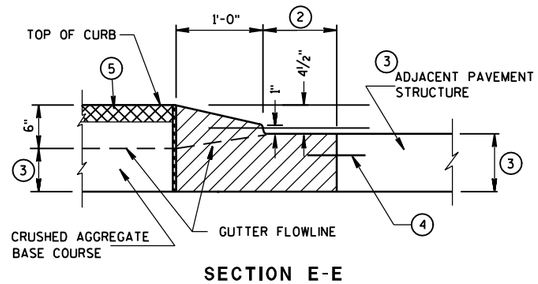

SECTION E-E

CONCRETE MEDIAN SLOPED NOSE TYPE 2

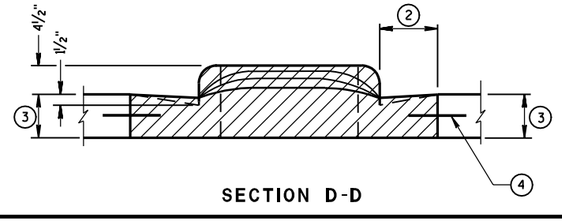

SECTION D-D

CONCRETE MEDIAN NOSE

STATE OF WISCONSIN
DEPARTMENT OF TRANSPORTATION

APPROVED
6/8/06
DATE
/S/ Jerry H. Zogg
ROADWAY STANDARDS DEVELOPMENT ENGINEER
FHWA

6

S.D.D. 11B 2-2

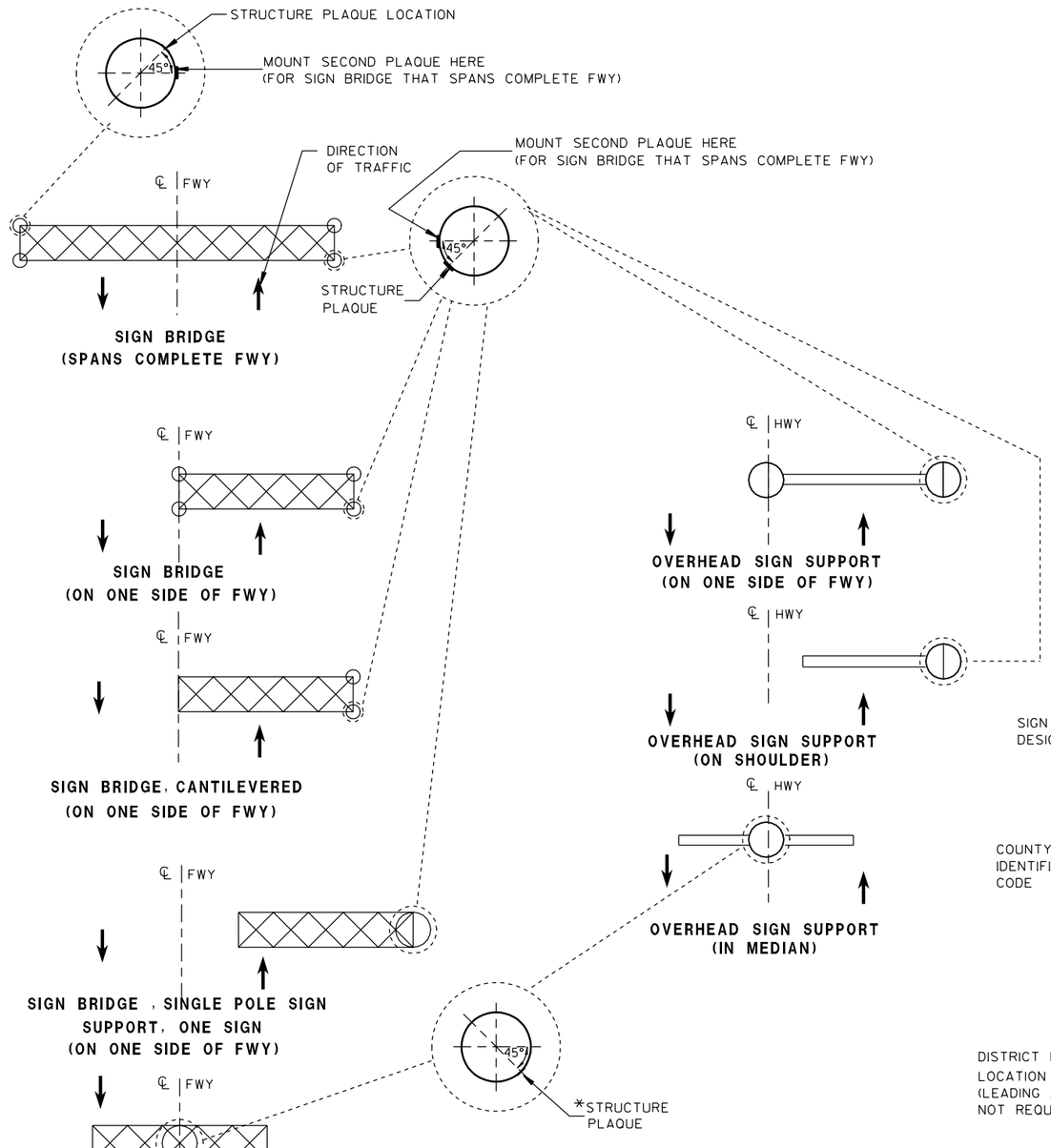

LOCATION OF SIGN BRIDGE & OVERHEAD
SIGN SUPPORT STRUCTURE PLAQUES

*WHEN SIGNS FACE TRAFFIC IN ONE DIRECTION, THE PLAQUE SHALL FACE TRAFFIC IN THE SAME DIRECTION. WHEN SIGNS ARE FACING TRAFFIC IN BOTH DIRECTIONS, THE PLAQUE SHALL FACE TRAFFIC IN THE CARDINAL DIRECTION.

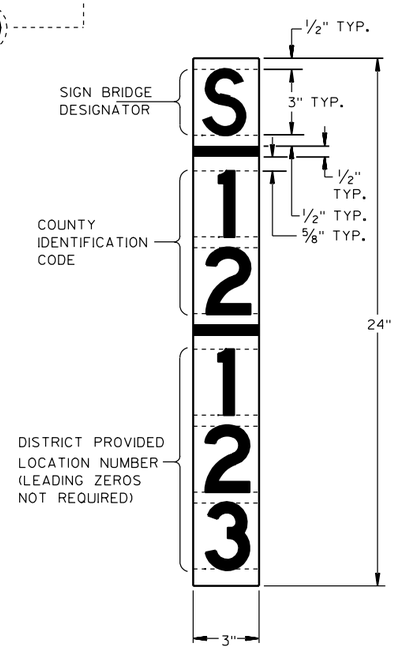

SIGN BRIDGE AND OVERHEAD SIGN SUPPORT
STRUCTURE PLAQUE FOR SIGN BRIDGES AND OVERHEAD SIGN
SUPPORT WHICH ARE NOT STRUCTURE MOUNTED

GENERAL NOTES

DETAILS OF CONSTRUCTION AND WORKMANSHIP NOT SHOWN IN THIS DRAWING SHALL CONFORM TO THE PERTINENT REQUIREMENTS OF THE CONTRACT.

PLAQUES SHALL BE INCIDENTAL TO ALL NEW INSTALLATIONS.

IF THE PROPOSED SIGN BRIDGE OR OVERHEAD SIGN SUPPORT IS REPLACING AN EXISTING SIGN BRIDGE OR OVERHEAD SIGN SUPPORT, A NEW IDENTIFICATION PLAQUE WILL BE REQUIRED.

FASTEN TOP, CENTER AND BOTTOM OF PLAQUE TO POLE OR OTHER LOCATION AS FOLLOWS:

GALVANIZED STEEL SHAFT - 3 STAINLESS STEEL POP RIVETS

A588 STEEL SHAFT - SHIM FOR DRAINAGE WITH STAINLESS WASHERS; FASTEN WITH STAINLESS SELF-TAPPING SCREWS

ALUMINUM SHAFTS - 3 ALUMINUM POP RIVETS

MOUNTING HEIGHT SHALL BE APPROXIMATELY 5.0' ABOVE CURB OR SHOULDER. ADJUST IF IT IS KNOWN THAT REQUIRED TRAFFIC SIGNS WILL OBSTRUCT.

PLAQUE MATERIALS:

BASE - SHEET ALUMINUM, 0.060" THICK.

FACE - WHITE, SELF-ADHESIVE VINYL SHEETING, NON-RETROREFLECTIVE

LINES - BLACK, ½" WIDE, SELF-ADHESIVE

CHARACTERS:- BLACK, SELF ADHESIVE, SERIES "D", SIZE AS SHOWN.

FOR SIGN BRIDGES, STRUCTURE MOUNTED, THE STRUCTURE PLAQUE SHALL BE MOUNTED HORIZONTALLY AS SHOWN ON THE DRAWING. THE STRUCTURE PLAQUE SHALL BE MOUNTED HORIZONTALLY TO THE BACK OF THE SIGN, BETWEEN THE ALUMINUM EXTRUSIONS, NEAR THE TOP LEFT HAND CORNER OF THE SIGN. THE BASE MATERIAL SHALL BE OMITTED AND THE FACE ADHERED DIRECTLY TO THE ALUMINUM SURFACE. PRIOR TO ADHERING THE MATERIAL, THE ALUMINUM SURFACE SHALL BE SMOOTH, CLEAN AND DRY.

WHERE SIGN BRIDGE ILLUMINATION IS PROVIDED, THE STRUCTURE MUST ALSO HAVE A SIGN BRIDGE CIRCUIT PLAQUE AS SHOWN IN THE ELECTRICAL DETAILS.

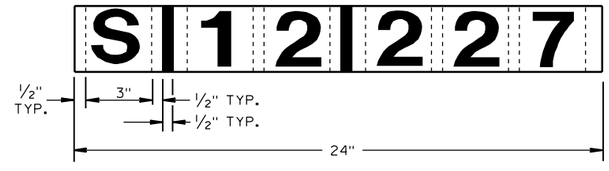

IDENTIFICATION PLAQUE FOR SIGN BRIDGE,
STRUCTURE MOUNTED

STRUCTURE IDENTIFICATION PLAQUES,
SIGN BRIDGES & OVERHEAD
SIGN SUPPORT

STATE OF WISCONSIN
DEPARTMENT OF TRANSPORTATION

APPROVED
4/22/99
DATE

Chester J. Seaver
CHIEF SIGNS AND MARKING ENGINEER

FHWA

6

S.D.D. 12 A 4-1

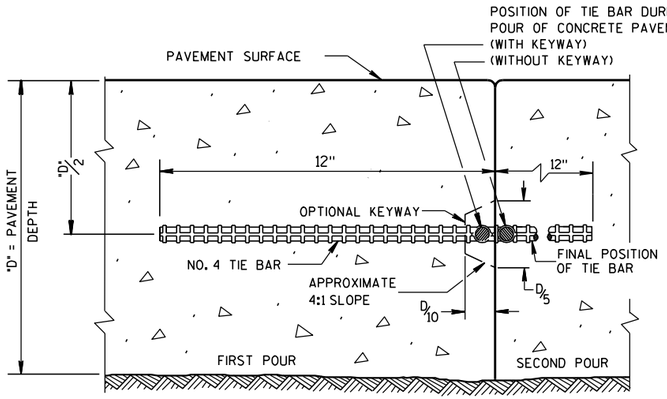

CONSTRUCTION JOINT

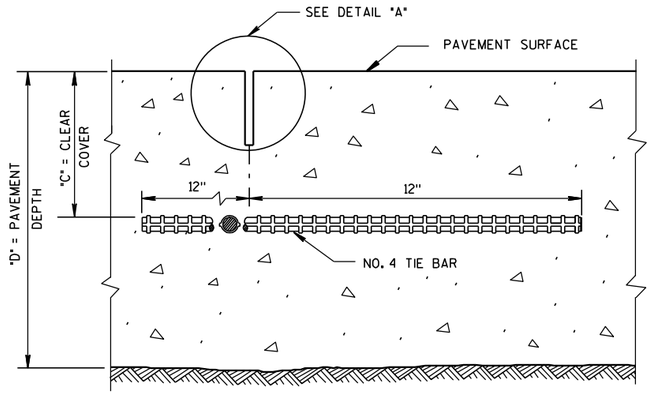

SAWED JOINT

GENERAL NOTES

DO NOT SEAL OR FILL LONGITUDINAL JOINTS.

CREATE A LONGITUDINAL JOINT FOR PAVEMENT WIDTHS GREATER THAN 15 FEET.

CORRELATE LONGITUDINAL JOINTS WITH LANE LINES WHEN POSSIBLE.

(1) ANCHOR TIE BARS INTO DRILLED HOLES WITH AN EPOXY.

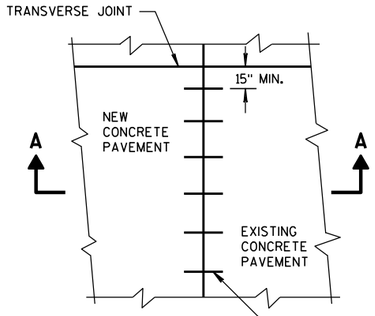

PLAN VIEW

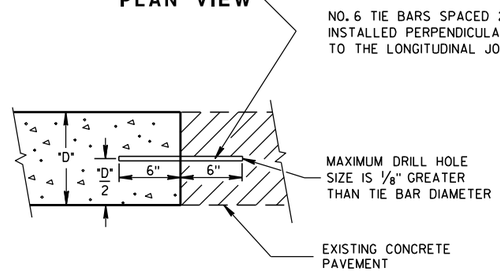

SECTION A-A
LONGITUDINAL CONSTRUCTION JOINT TIE BARS ANCHORED INTO EXISTING PAVEMENT

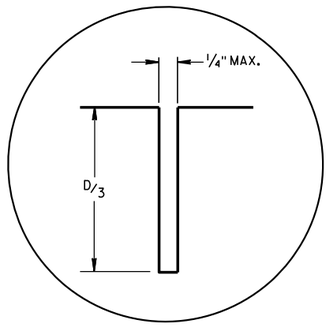

DETAIL "A"

PAVEMENT DEPTH "D"	CLEAR COVER "C"	MAXIMUM TIE BAR SPACING "S"	
		PAVEMENT WIDTH	
		24' OR 26'	≥ 30'
6, 6 ½"	3" ± ½"	48"	42"
7, 7 ½"	3 ¼" ± 1"	45"	36"
8, 8 ½"	3 ¾" ± 1"	39"	30"
9, 9 ½"	4 ¼" ± 1"	33"	27"
10, 10 ½"	4 ¾" ± 1"	30"	24"
11, 11 ½"	5 ¼" ± 1"	27"	21"
12"	5 ¾" ± 1"	24"	21"

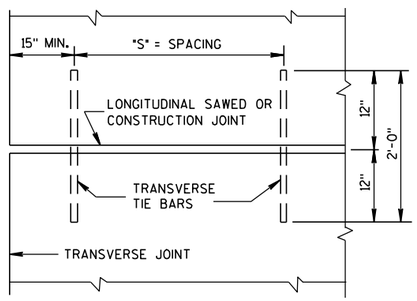

PLAN VIEW
SHOWING LOCATION OF TIE BARS

CONCRETE PAVEMENT
LONGITUDINAL JOINTS AND TIES

STATE OF WISCONSIN
DEPARTMENT OF TRANSPORTATION

APPROVED

10-5-2010 — DATE

/S/ Deb Bischoff — PAVEMENT POLICY & DESIGN ENGINEER

FHWA

6

S.D.D. 13 C 1-15

6

S.D.D. 13 C 1-15

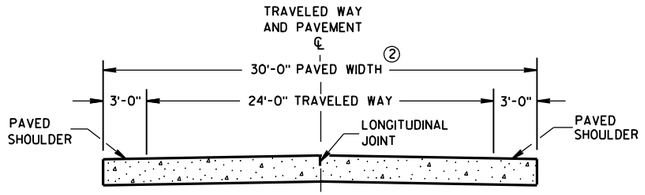

SECTION A-A ①

TWO-LANE TWO-WAY HIGHWAY

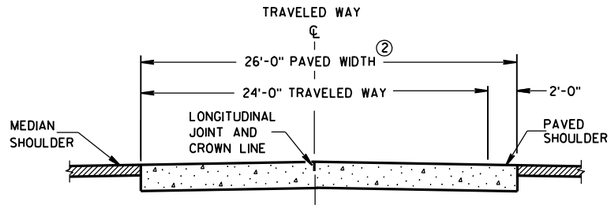

SECTION B-B

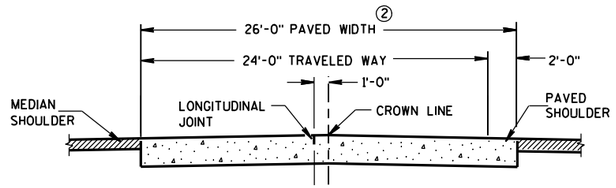

ALTERNATIVE SECTION B-B ①

DIVIDED HIGHWAY

GENERAL NOTES

CONTRACTION JOINTS

CONSTRUCT CONTRACTION JOINTS NORMAL TO THE CENTERLINE. SHOW THE LOCATION OF CONTRACTION JOINTS THROUGH INTERSECTIONS ON THE PLANS OR AS DIRECTED BY THE ENGINEER.

DO NOT SEAL OR FILL CONTRACTION JOINTS.

INSTALL DOWEL BARS PARALLEL TO THE PAVEMENT CENTERLINE AND PAVEMENT SURFACE.

FOR PAVEMENT SLABS OF VARYING WIDTHS, CENTER THE DOWEL ASSEMBLY ACROSS THE LANES. LOCATE THE INNER AND OUTER MOST DOWEL BARS SO THAT THE CENTER OF THE BARS ARE A MINIMUM OF 6 INCHES AND A MAXIMUM OF 12 INCHES FROM THE LONGITUDINAL JOINT AND THE EDGE OF PAVEMENT.

CONSTRUCTION JOINTS

LOCATE CONSTRUCTION JOINTS A MINIMUM OF 4 FEET FROM THE NEAREST CONTRACTION JOINT AND ALIGN PARALLEL TO CONTRACTION JOINTS.

THE CONTRACTOR MAY INSERT TIE BARS THROUGH THE HEADER BOARD AFTER THE CONCRETE HAS BEEN PLACED.

① REFER TO TYPICAL CROSS SECTIONS FOR ADDITIONAL DETAILS.

② MEASURE THE ENTIRE PAVED WIDTH INCLUDING THE PORTION(S) LABELED PAVED SHOULDER AS CONCRETE PAVEMENT.

PAVEMENT DEPTH, DOWEL BAR SIZE AND JOINT SPACING TABLE

PAVEMENT DEPTH (D)	DOWEL BAR DIAMETER	CONTRACTION JOINT SPACING
5 ½", 6", 6 ½"	NONE	12'
7", 7 ½"	1"	14'
8", 8 ½"	1 ¼"	15'
9", 9 ½"	1 ¼"	15'
10" & ABOVE	1 ½"	15'

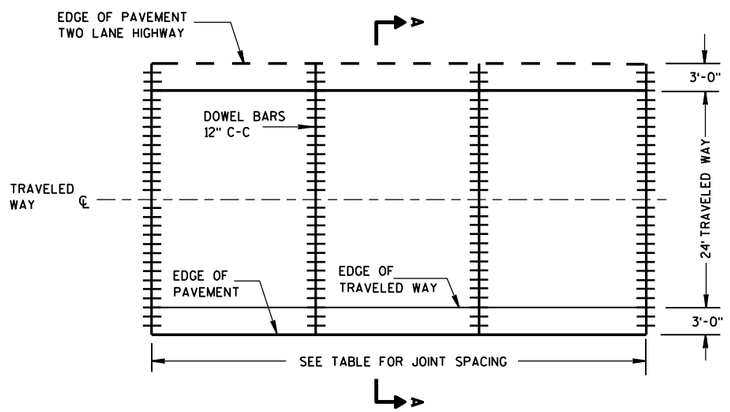

CONTRACTION JOINT LAYOUT
FOR TWO-LANE TWO-WAY HIGHWAY

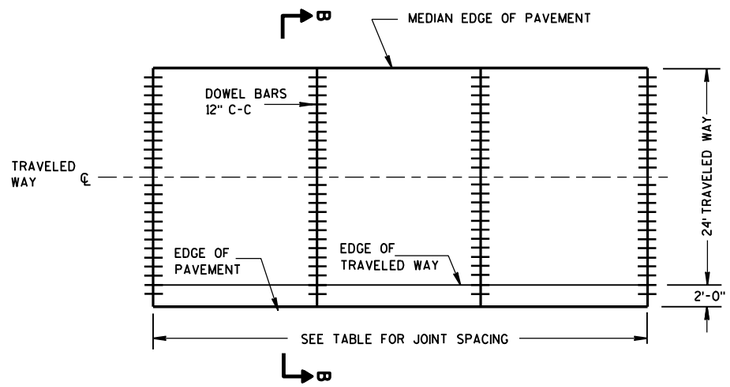

CONTRACTION JOINT LAYOUT
FOR DIVIDED HIGHWAY

RURAL DOWELED
CONCRETE PAVEMENT

STATE OF WISCONSIN
DEPARTMENT OF TRANSPORTATION

6

S.D.D. 13 C 11-10a

6

S.D.D. 13 C 11-10a

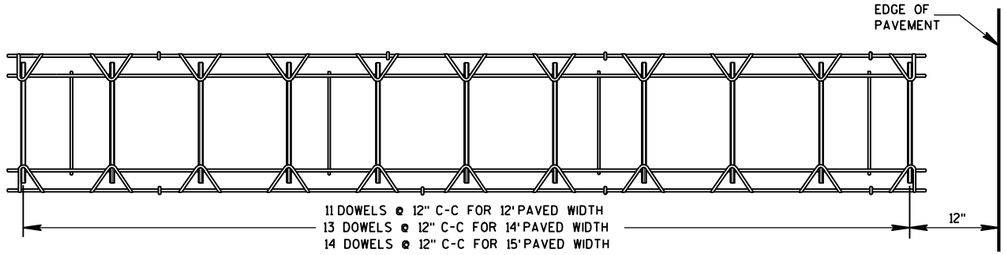

PLAN VIEW

SIDE VIEW

(NORMAL TO CENTERLINE)

CONTRACTION JOINT DOWEL ASSEMBLY ①

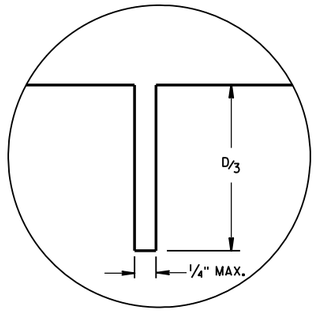

JOINT DETAIL

GENERAL NOTES

① THE ENGINEER MAY APPROVE THE USE OF ALTERNATIVE DESIGNS OF THE DOWEL ASSEMBLY. THE CONTRACTOR MAY USE MECHANICAL DOWEL BAR INSERTERS INSTEAD OF DOWEL ASSEMBLIES.

② ANCHOR DOWEL BARS INTO DRILLED HOLES WITH AN EPOXY.

③ APPLY A THIN UNIFORM COATING OF SURFACE TREATMENT TO THE FREE END OF DOWEL BARS TO PREVENT BONDING.

④ SPACE DOWEL BARS INSTALLED BY DRILLING 1'-3" ON CENTER. CENTER THE GROUPING OF DOWEL BARS INSIDE THE SLAB BASED ON ALL THE FOLLOWING SITUATIONS:

BETWEEN THE EDGES OF PAVEMENTS WITHOUT LONGITUDINAL JOINTS OR BETWEEN THE EDGE OF PAVEMENT AND NEAREST LONGITUDINAL JOINT OR BETWEEN TWO ADJACENT LONGITUDINAL JOINTS.

⑤ SECURE BASKETS WITH ANCHORS TO HOLD DOWEL BARS IN THE CORRECT POSITION AND ALIGNMENT. TYPE, LOCATION, NUMBER AND LENGTH OF ANCHORS ARE DEPENDENT UPON FIELD CONDITIONS.

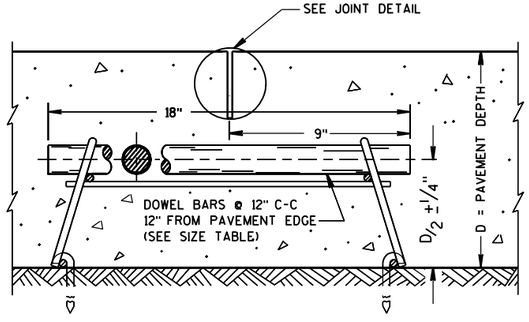

DOWELED CONTRACTION JOINT

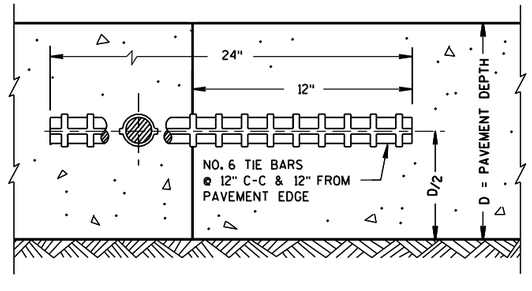

CONSTRUCTION JOINT

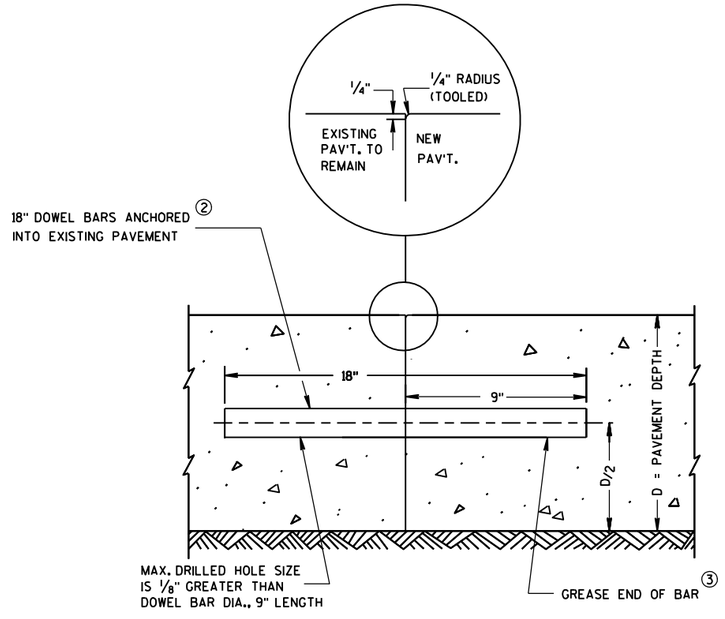

TRANSVERSE CONTRACTION JOINTS ABUTTING EXISTING PAVEMENT

④ DOWEL BAR DETAIL

RURAL DOWELED CONCRETE PAVEMENT

STATE OF WISCONSIN
DEPARTMENT OF TRANSPORTATION

APPROVED

12/11/09 — DATE

/S/ Deb Bischoff — PAVEMENT POLICY & DESIGN ENGINEER

FHWA

6

S.D.D. 13 C 11-10b

6

S.D.D. 13 C 11-10b

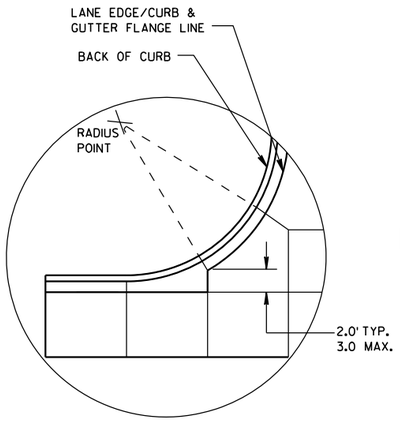

DETAIL "A"

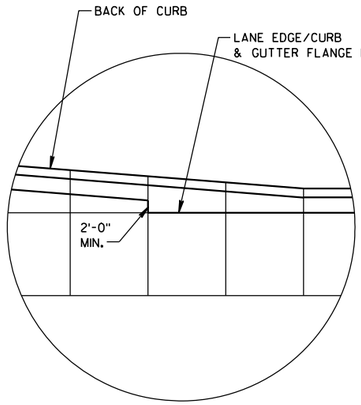

DETAIL "B"

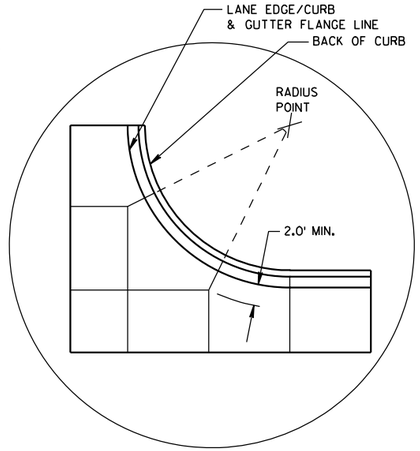

DETAIL "C"

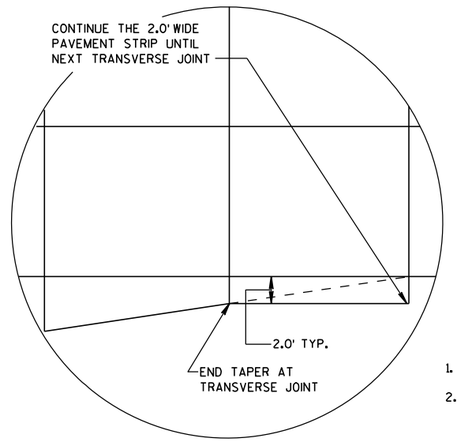

DETAIL "D"

GENERAL NOTES

THE PRIMARY ROADWAY CONTROLS THE TRANSVERSE JOINT PATTERN.

ALIGN NEW JOINTS WITH EXISTING JOINTS OR CRACKS.

CONSTRUCT TRANSVERSE JOINTS PERPENDICULAR TO THE ROADWAY.

ADJUST TRANSVERSE JOINTS TO ALIGN WITH UTILITY FIXTURES (E.G. MANHOLES AND INLETS) IN THE PAVEMENT STRUCTURE WHEN POSSIBLE. WATER VALVES DO NOT REQUIRE JOINT ADJUSTMENT.

AVOID SLABS LESS THAN 2 FEET WIDE OR GREATER THAN 15 FEET WIDE.

SEE TABLE FOR TRANSVERSE JOINT SPACING. JOINT SPACING SPECIFIED IS MAXIMUM AND ACTUAL SPACING CAN BE ADJUSTED TO ACCOMMODATE INTERSECTIONS.

AVOID ANGLES LESS THAN 60° BY DOGLEGGING JOINTS THROUGH CURVE RADIUS POINTS. USE 90° ANGLES WHEN POSSIBLE.

CORRELATE LONGITUDINAL JOINTS WITH LANE LINES WHEN POSSIBLE.

1. PROVIDE TRANSVERSE JOINTS AT ALL PAVEMENT WIDTH CHANGES.
2. CONSTRUCT DOWELED EXPANSION JOINT ON THE SIDE ROAD OF AN INTERSECTION IF THE SIDE ROAD IS CONCRETE PAVEMENT AND GREATER THAN 300 FEET IN LENGTH. ALIGN EXPANSION JOINT WITH EDGE OF RADIUS.
3. THE ENGINEER MAY APPROVE SLIGHT VARIATIONS FROM THESE JOINTING DETAILS.

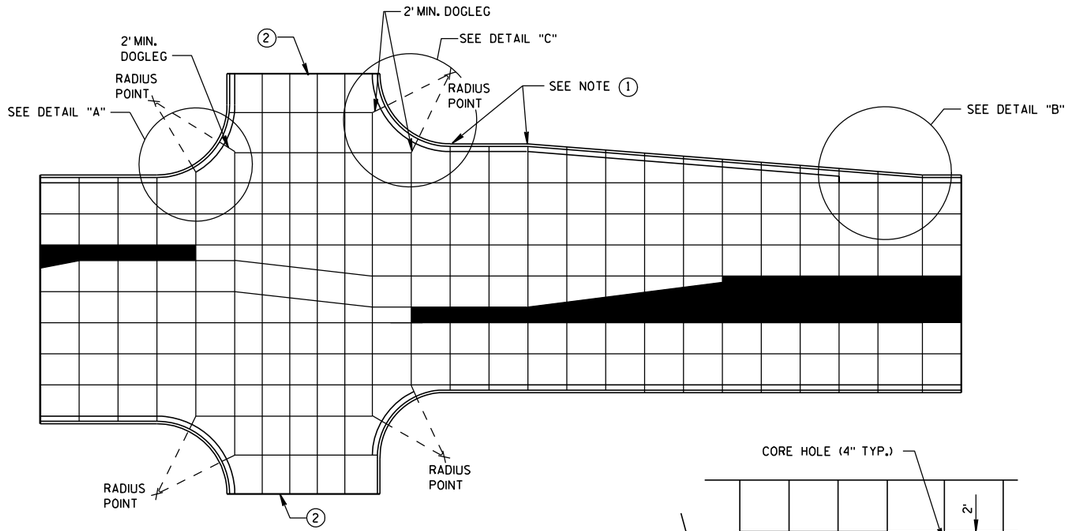

STANDARD INTERSECTION

PAVEMENT DEPTH AND JOINT SPACING TABLE

PAVEMENT DEPTH (D)	CONTRACTION JOINT SPACING
6", 6½"	12'
7", 7½"	14'
8" & ABOVE	15'

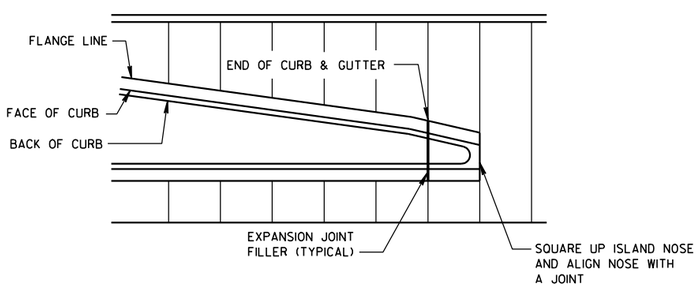

APPROACH TO MEDIAN

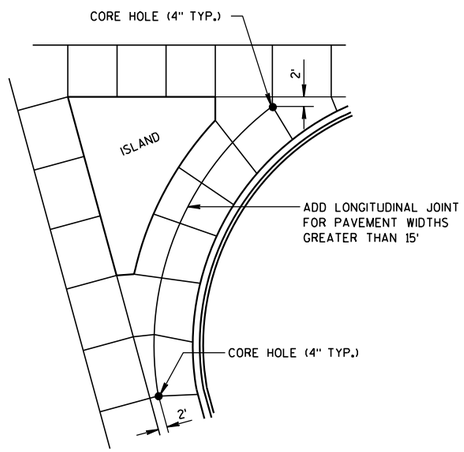

LARGE RIGHT TURN

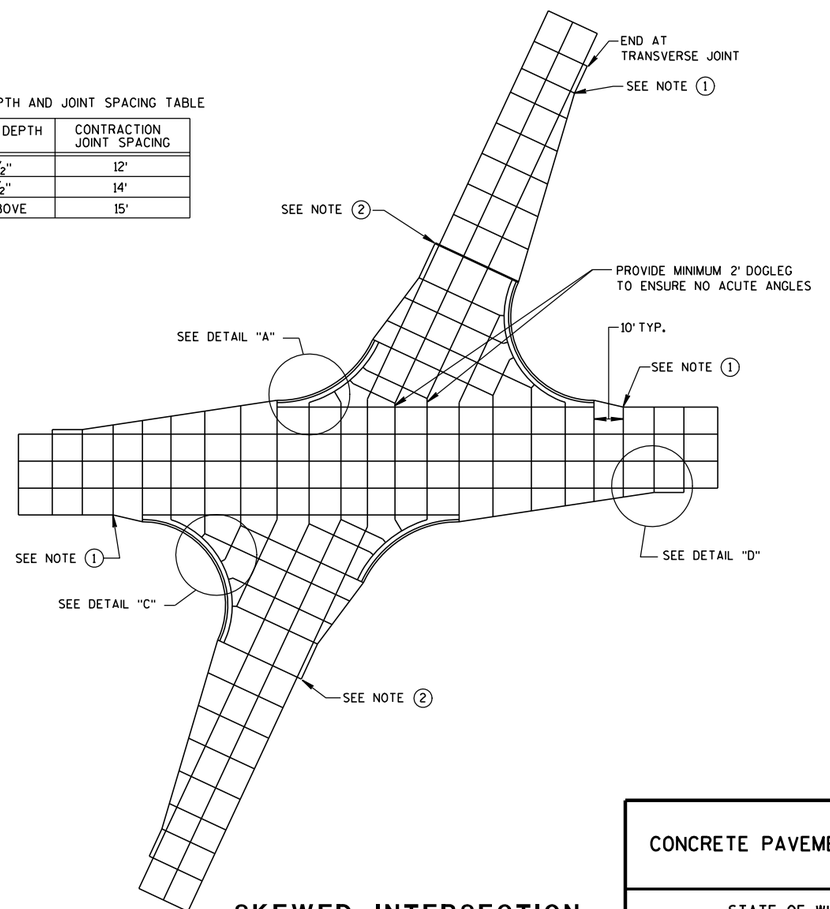

SKEWED INTERSECTION

CONCRETE PAVEMENT JOINTING

STATE OF WISCONSIN
DEPARTMENT OF TRANSPORTATION

6

S.D.D. 13C18-1a

LEGEND

POTENTIAL DOWELED EXPANSION JOINT

DOWELED JOINT

TIED JOINT

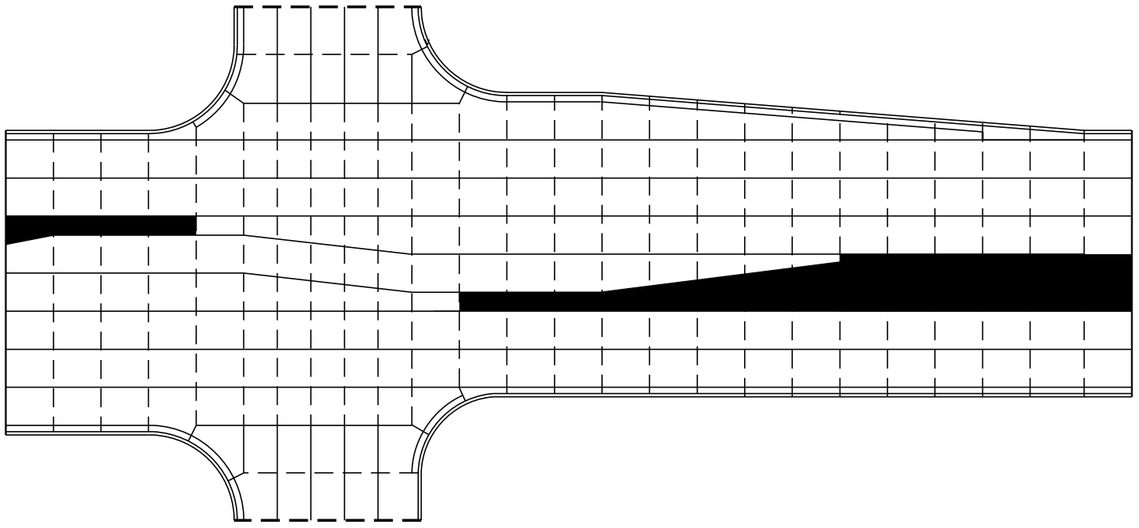

STANDARD INTERSECTION

GENERAL NOTES

USE AN EXPANSION JOINT FILLER MEETING THE REQUIREMENTS OF STANDARD SPECIFICATION 415.

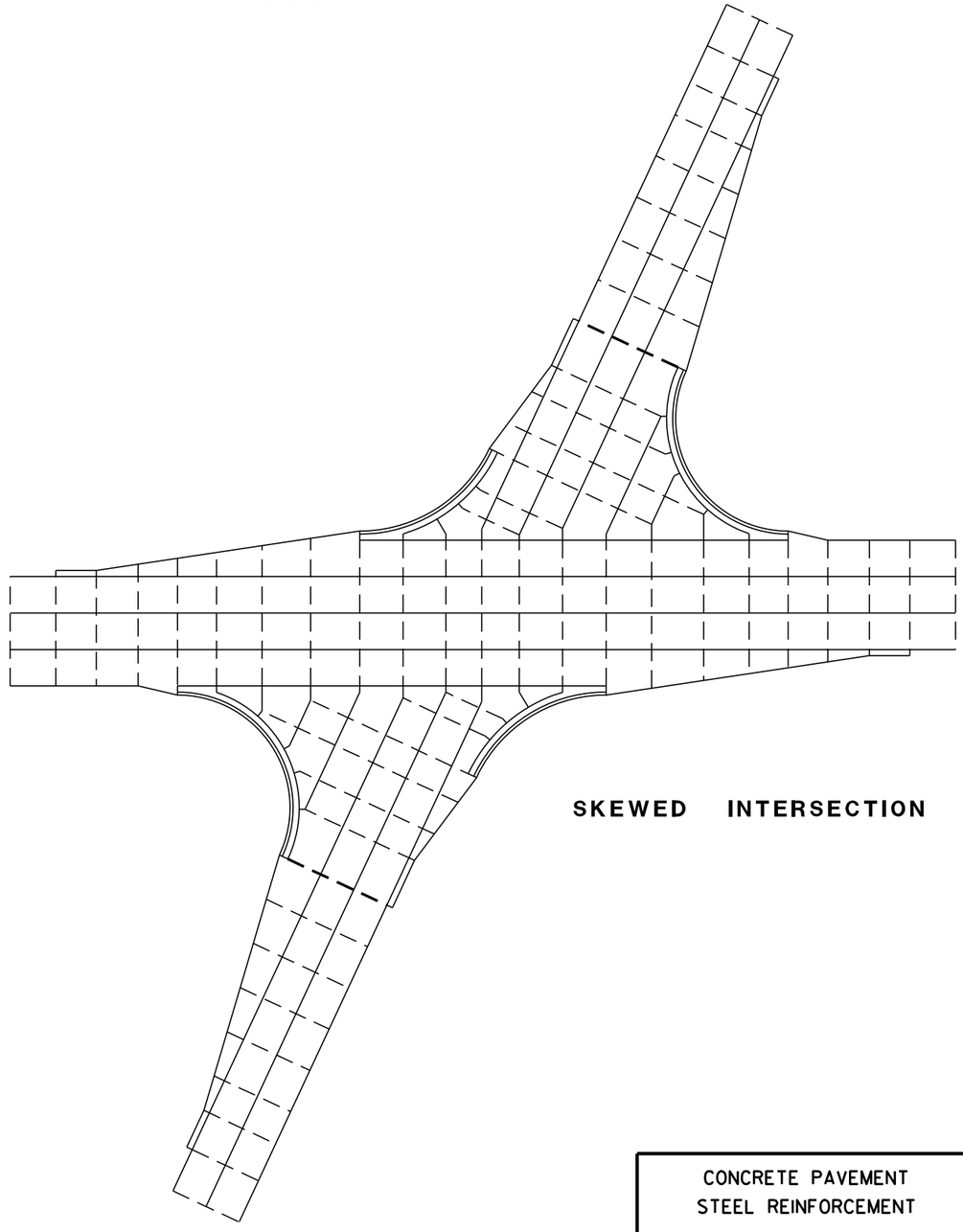

SKEWED INTERSECTION

6

S.D.D. 13C18-1b

CONCRETE PAVEMENT
STEEL REINFORCEMENT

STATE OF WISCONSIN
DEPARTMENT OF TRANSPORTATIO

6

S.D.D. 13C18-1b

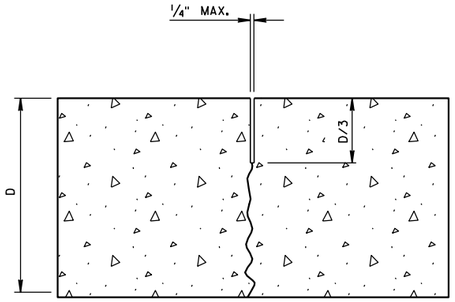

UNDOWELED-TRANSVERSE

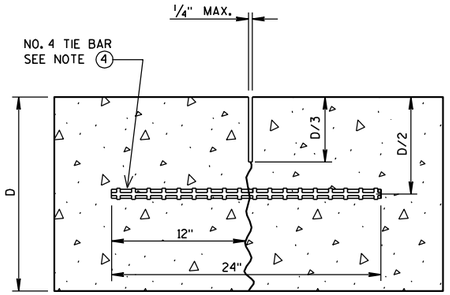

TIED LONGITUDINAL

GENERAL NOTES

1. USE DOWELED EXPANSION JOINTS ON SIDE ROADS AT INTERSECTIONS (TO ISOLATE THE SIDE ROAD FROM THE THROUGH STREET) IF THE SIDE ROAD IS CONCRETE PAVEMENT AND GREATER THAN 300 FEET IN LENGTH.
2. SPACE CONTRACTION JOINTS IN ACCORDANCE WITH 13C4, 13C11 OR 13C13.
3. LOCATE CONSTRUCTION JOINTS A MINIMUM OF 4 FEET FROM THE NEAREST CONTRACTION JOINT AND ALIGN PARALLEL TO THE CONTRACTION JOINTS.
4. SPACE TIE BARS AT LONGITUDINAL CONSTRUCTION OR CONTRACTION JOINTS IN ACCORDANCE WITH SDD 13C1.
5. CONSTRUCTION JOINTS CAN BE FORMED OR SAWED.
6. IF JOINT IS FORMED, PROVIDE A 1/4-INCH RADIUS.

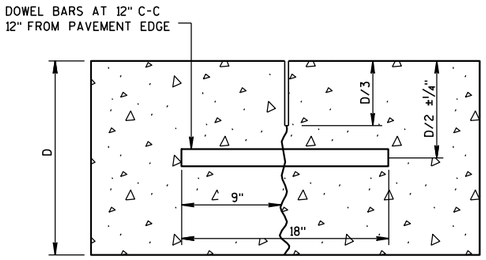

DOWELED-TRANSVERSE

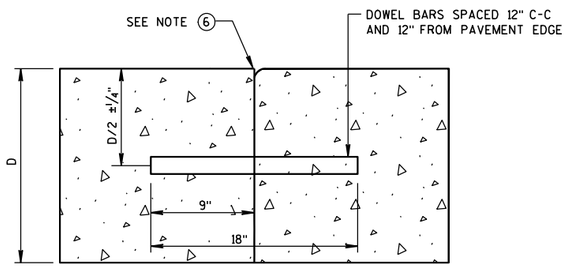

DOWELED TRANSVERSE

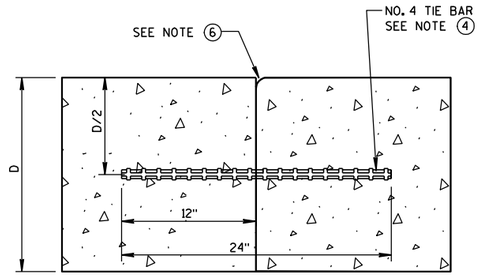

TIED LONGITUDINAL

CONTRACTION JOINTS

SEE NOTE (2)

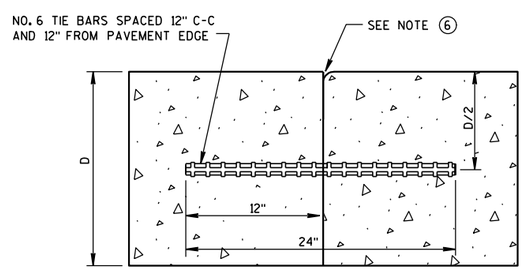

TIED TRANSVERSE
SEE NOTE (3)

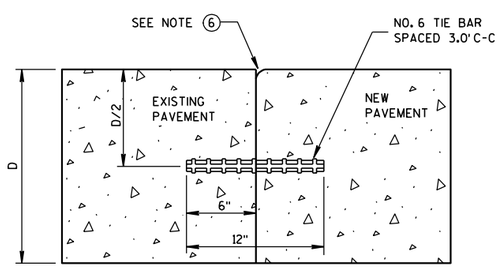

TIED LONGITUDINAL TO EXISTING

CONSTRUCTION JOINTS

SEE NOTE (5)

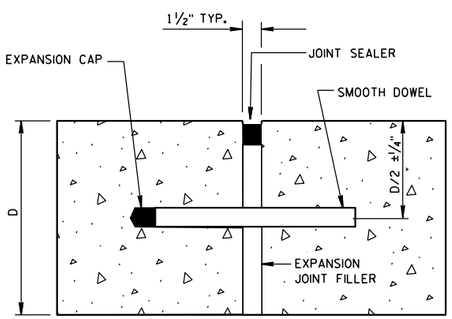

DOWELED-TRANSVERSE
SEE NOTE (1)

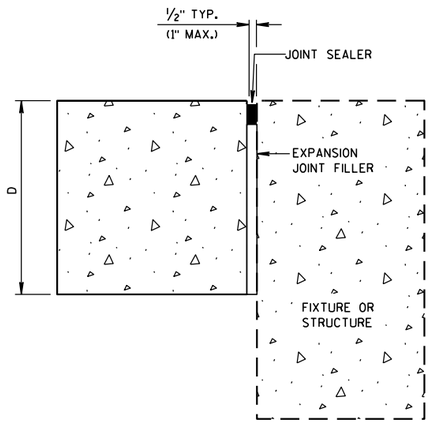

UNTIED-LONGITUDINAL

EXPANSION JOINTS

CONCRETE PAVEMENT
JOINT TYPES

STATE OF WISCONSIN
DEPARTMENT OF TRANSPORTATION

6

S.D.D. 13 C 18-1c

6

S.D.D. 13 C 18-1c

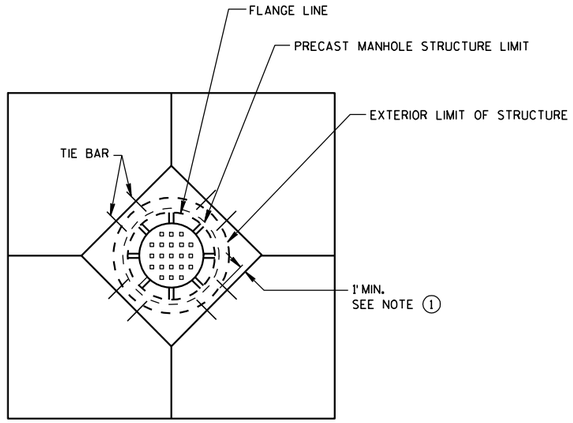

DIAGONAL MANHOLE BOXOUT FOR CONSTRUCTION JOINTS

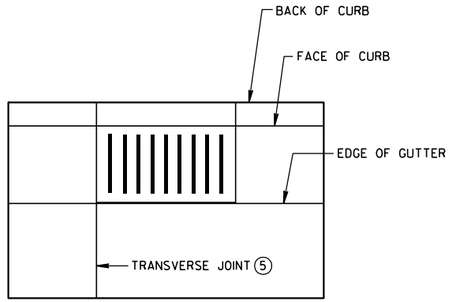

INLET WITH TRANSVERSE JOINT

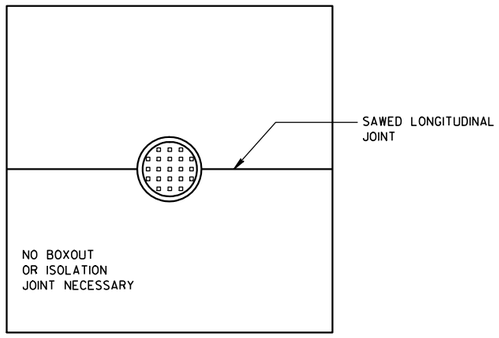

MANHOLE WITH LONGITUDINAL JOINT

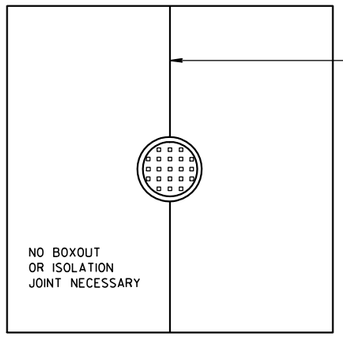

MANHOLE WITH TRANSVERSE JOINT

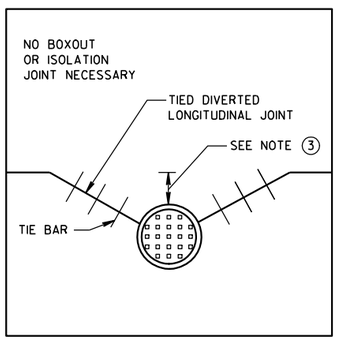

MANHOLE WITH DIVERTED LONGITUDINAL CONTRACTION JOINT

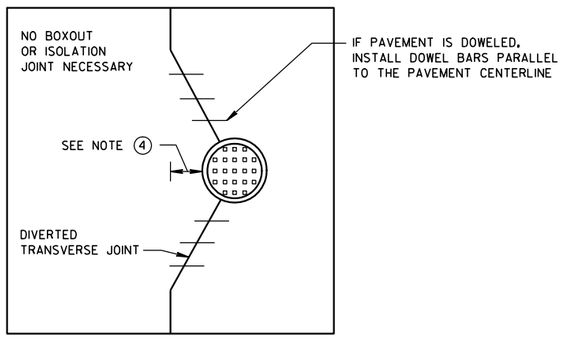

MANHOLE WITH DIVERTED TRANSVERSE CONTRACTION JOINT

GENERAL NOTES

1. USE BOXOUTS WHEN UTILITY STRUCTURE IS IN THE PATH OF CONSTRUCTION JOINTS. PROVIDE A 1 FOOT MINIMUM CLEARANCE BETWEEN THE EXTERIOR LIMIT OF THE STRUCTURE TO THE DIAMOND BOXOUT.
2. ADJUST TRANSVERSE JOINT TO INTERSECT MANHOLE IF POSSIBLE.
3. IF DISTANCE BETWEEN THE LONGITUDINAL JOINT AND THE EDGE OF MANHOLE IS GREATER THAN 2 FEET, DO NOT DIVERT JOINT AND SAW LONGITUDINAL JOINT AS NORMAL. IF DISTANCE IS 2 FEET OR LESS, DIVERT LONGITUDINAL JOINT AT A 2:1 TAPER RATE TO THE CENTER OF THE MANHOLE.
4. IF DISTANCE FROM THE EDGE OF MANHOLE TO THE NEAREST TRANSVERSE JOINT IS GREATER THAN 4 FEET, REDIRECT JOINT TO INTERSECT MANHOLE. IF DISTANCE IS 4 FEET OR LESS, PLACE REBAR REINFORCEMENT AROUND MANHOLE.
5. ALIGN TRANSVERSE JOINT WITH ONE EDGE OF INLET WHEN PRACTICAL.

6

S.D.D. 13C18-1d

CONCRETE PAVEMENT
JOINTING AT UTILITY FIXTURES

STATE OF WISCONSIN
DEPARTMENT OF TRANSPORTATION

APPROVED
10-5-2010
DATE

/S/ Deb Bischoff
PAVEMENT POLICY & DESIGN ENGINEER

FHWA

6

S.D.D. 13C18-1d

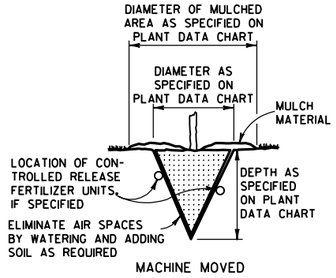

MACHINE MOVED

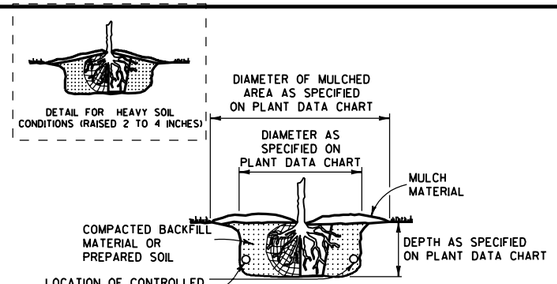

BALLED AND BURLAPPED, BARE ROOT, POTTED OR CONTAINER GROWN

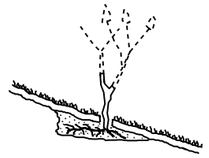

ACCOMMODATE ROOTS (SMOOTH AND STAGHORN SUMAC)

NOTE:
1) ENGINEER SHALL REQUIRE 3 SLITS IN POT TO SPEED DETERIORATION
2) METAL, PLASTIC OR OTHER NONDEGRADABLE POTS SHALL BE REMOVED PRIOR TO PLANTING

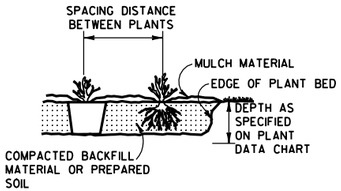

PREPARED BED (BARE ROOT AND POTTED)

PLANTING

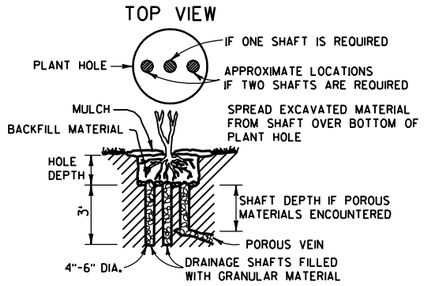

NOTE:
DRAINAGE SHAFT AS SPECIFIED ON PLANT DATA CHART

DRAINING

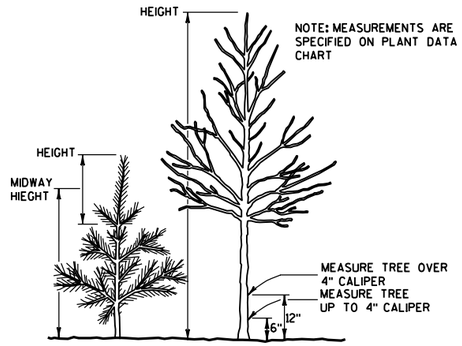

MEASURING

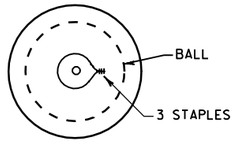

TOP VIEW

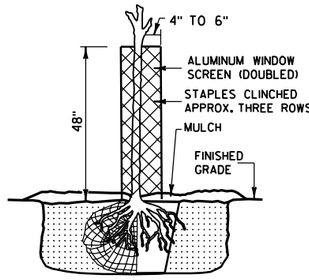

RODENT PROTECTION

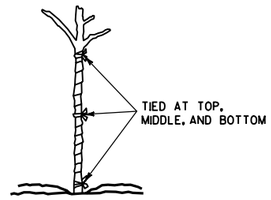

WRAPPING

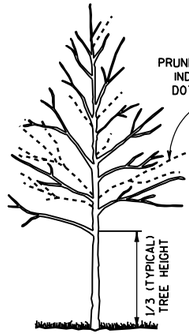

TALL DECIDUOUS TREES (ASH, MAPLE, LINDEN, OAK)

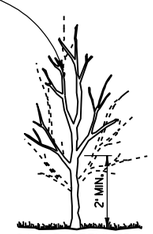

SINGLE STEMMED LOW DECIDUOUS TREES (CRABS AND OTHER SINGLE STEM TYPE)

MULTI-STEMMED LOW DECIDUOUS TREES OR LARGE SHRUBS (HAWTHORN, SERVICEBERRY)

NOTE: WHEN PRUNING, PRESERVE CHARACTER AND SHAPE OF TREE. AVOID LEAVING STUBS - REMOVE BRANCH OR TWIG BACK TO THE NEAREST CROTCH
1) PRUNE TO REMOVE DEAD AND BROKEN BRANCHES
2) PRUNE TO REMOVE BRANCHES THAT TOUCH OR ARE TOO CLOSE TO OTHER BRANCHES

SHRUBS (GRAY DOGWOOD ARROWWOOD VIBURNUM)

SUMAC

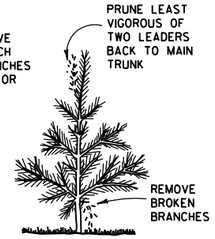

TREE TYPE EVERGREENS (PINE, SPRUCE, FIR) EVERGREENS USUALLY ARE NOT PRUNED

PRUNING

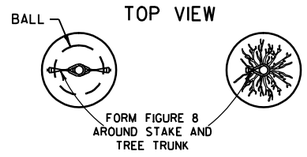

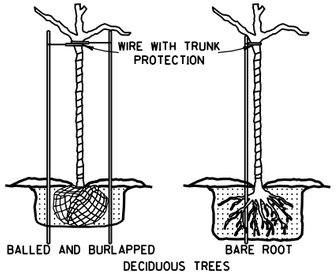

NOTE: BRACING STAKE
1) SHALL BE DRIVEN INTO THE GROUND AS CLOSE TO THE TREE AS POSSIBLE WITHOUT DAMAGING THE BRANCHES.
2) MAY BE DRIVEN AT SUCH AN ANGLE THAT IT DOES NOT PENETRATE THE BALL OR POT.
3) SHALL NOT PROTRUDE ABOVE THE TOP OF THE TREE; AND
4) SHALL HAVE A HOLE NEAR THE TOP TO HOLD THE WIRE IN PLACE.

BRACING

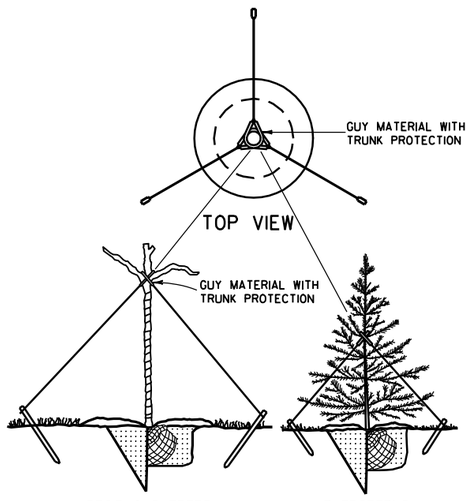

GUYING

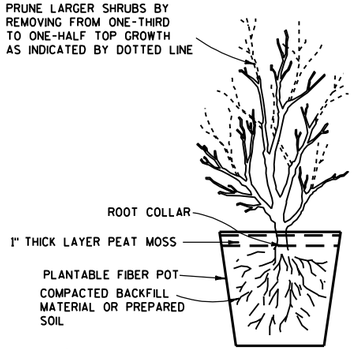

POTTING

NOTES

DETAILS OF CONSTRUCTION NOT SHOWN ON THIS DRAWING SHALL CONFORM TO THE PERTINENT REQUIREMENTS OF THE STANDARD SPECIFICATIONS AND THE APPLICABLE SPECIAL PROVISIONS.

BRACING, WRAPPING, GUYING, RODENT PROTECTION, FERTILIZER AND MULCH SHALL BE USED ONLY WHEN SPECIFIED ON THE PLANT DATA CHART (PART OF PLAN) OR SPECIAL PROVISIONS.

TREE PLANTING DETAIL

STATE OF WISCONSIN
DEPARTMENT OF TRANSPORTATION

APPROVED
4/11/94
DATE
FHWA

Roy D. Thuemmler
CHIEF METHODS DEVELOPMENT ENGINEER

S.D.D. 14 A 2-1

6

S.D.D. 14 A 2-1

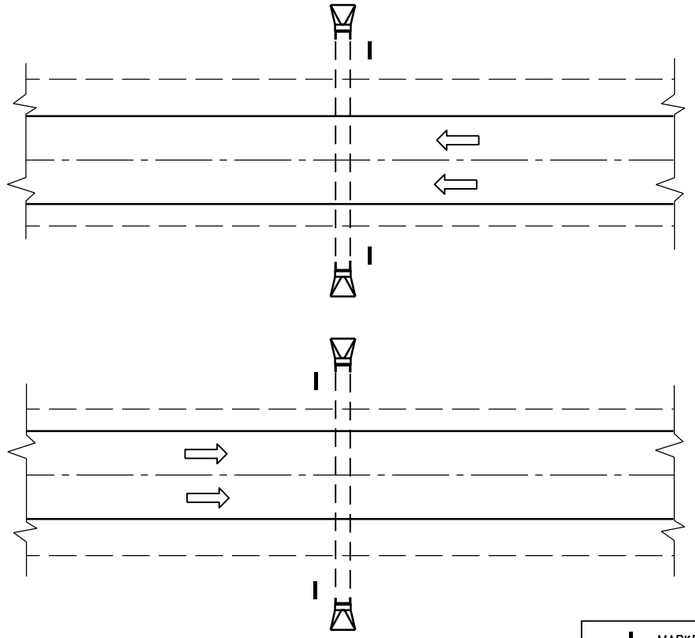

PLAN VIEW
DIVIDED HIGHWAY

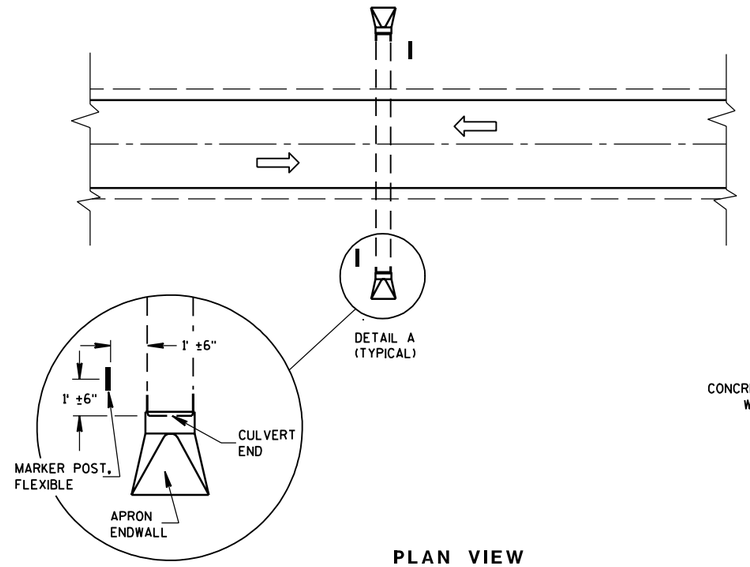

PLAN VIEW
UNDIVIDED HIGHWAY

MARKER POST, FLEXIBLE
DIRECTION OF TRAFFIC FLOW

GENERAL NOTES

DETAILS OF CONSTRUCTION, MATERIALS AND WORKMANSHIP NOT SHOWN ON THIS DRAWING SHALL CONFORM TO THE PERTINENT REQUIREMENTS OF THE STANDARD SPECIFICATIONS AND THE APPLICABLE SPECIAL PROVISIONS.

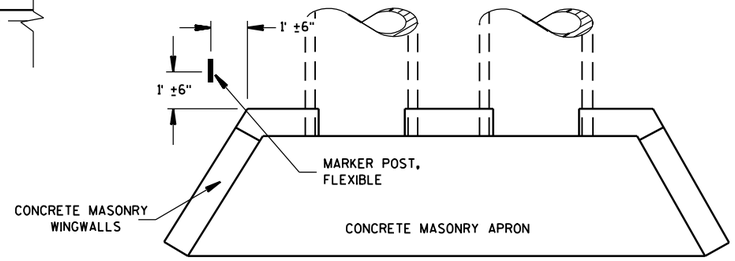

PLAN VIEW

CONCRETE MASONRY ENDWALLS FOR CULVERT PIPE AND PIPE ARCH

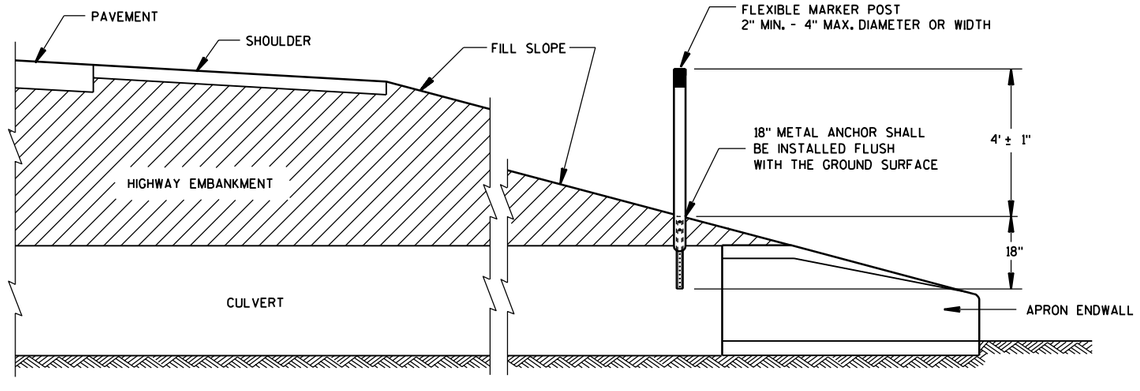

CROSS SECTION
FLEXIBLE MARKER POST

FLEXIBLE MARKER POST LOCATION

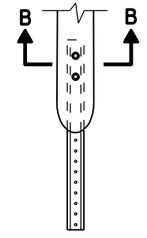

FRONT VIEW

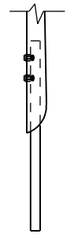

SIDE VIEW
CURVED MARKER

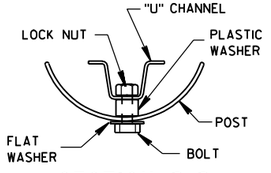

SECTION B-B

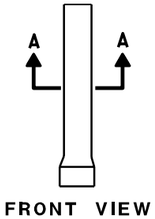

FRONT VIEW

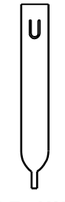

SIDE VIEW
ROUND MARKER

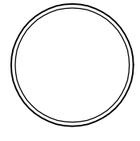

SECTION A-A

FLEXIBLE MARKER POST ANCHORS

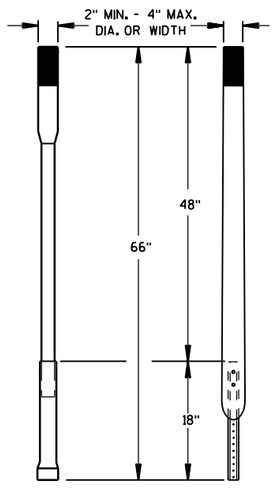

ALTERNATE 1 ALTERNATE 2

FLEXIBLE MARKER POST

MARKER POST, FLEXIBLE, FOR CULVERT END

STATE OF WISCONSIN
DEPARTMENT OF TRANSPORTATION

APPROVED
10/1/98
DATE

Roy L. Amundson
CHIEF ROADWAY DEVELOPMENT ENGINEER

FHWA

S.D.D. 15 A 3-1

6

S.D.D. 15 A 3-1

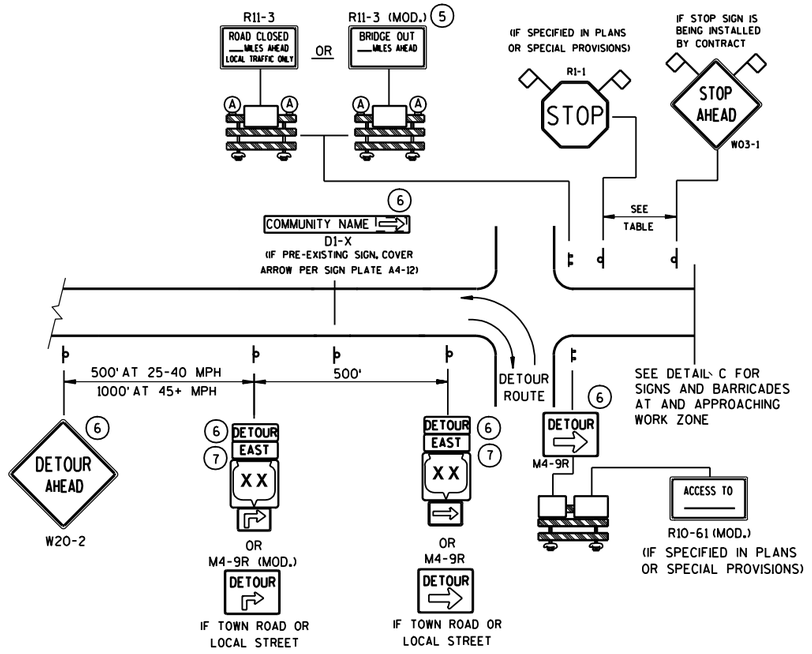

DETAIL A

MAINLINE CLOSURE WITH POSTED DETOUR

WORK ZONE GREATER THAN ½ MILE FROM DETOUR ROUTE (1000 FEET IF URBAN)

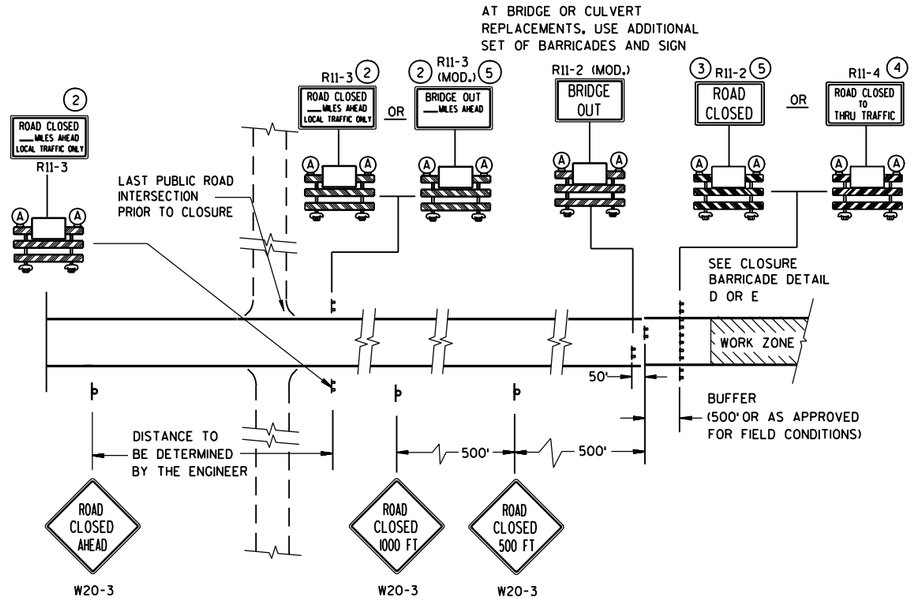

DETAIL C

MAINLINE CLOSURE, NO POSTED DETOUR

SPEED LIMIT (MPH)	"STOP AHEAD" ADVANCE WARNING DISTANCE (FT)
25	200
30	200
35	350
40	350
45	500
50	550
55	750

SEE SDD 15C2-4b
FOR GENERAL NOTES
AND FOOTNOTES ① THROUGH ⑦

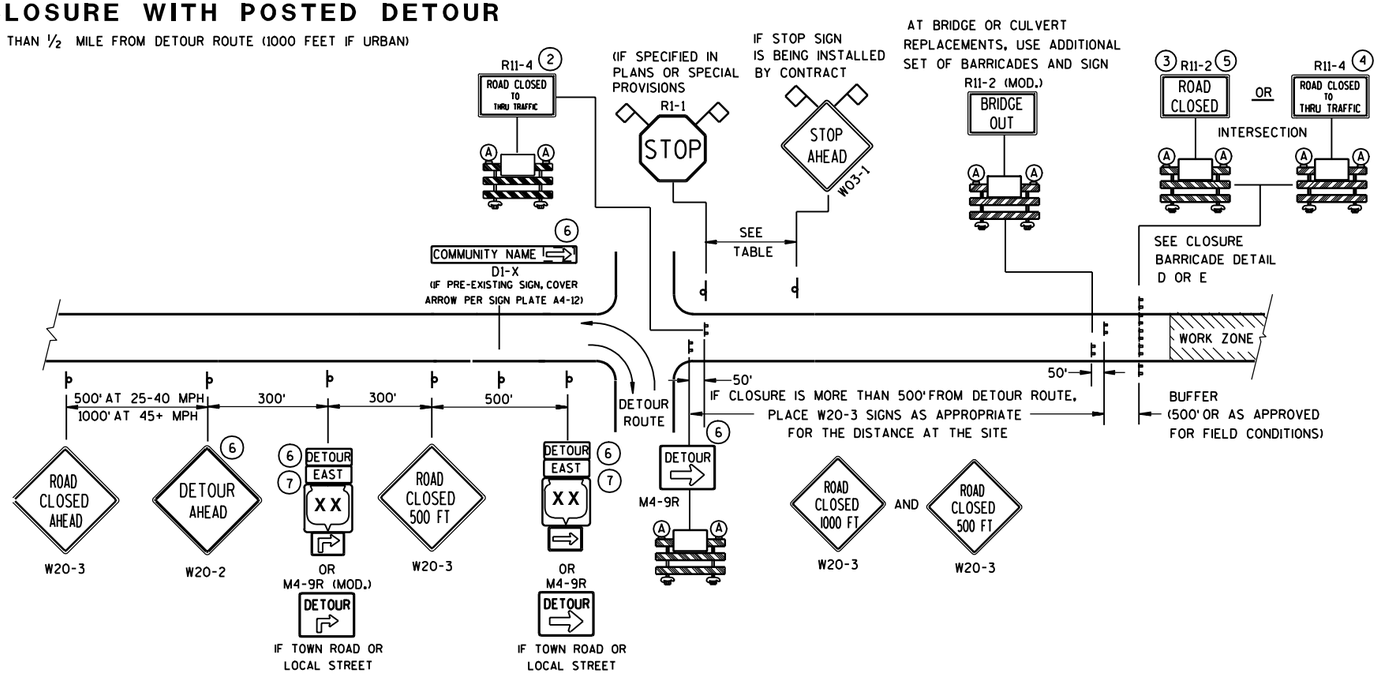

DETAIL B

MAINLINE CLOSURE WITH POSTED DETOUR

WORK ZONE LESS THAN ½ MILE FROM DETOUR ROUTE (1000 FEET IF URBAN)

LEGEND

- POST MOUNTED SIGN
- TYPE III BARRICADES
- (A) TYPE "A" LOW INTENSITY FLASHING WARNING LIGHT (FOR NIGHT USE)
- WORK ZONE
- DETOUR / EAST — M4-8 / M3-X
- XX — M1-4; COUNTY XX — M1-5A; XX — M1-6
- M05-1 OR M06-1
- FLAGS, 16" X 16" MIN., (ORANGE)

BARRICADES AND SIGNS FOR MAINLINE CLOSURES

STATE OF WISCONSIN
DEPARTMENT OF TRANSPORTATION

6

S.D.D. 15 C 2-4a

6

S.D.D. 15 C 2-4a

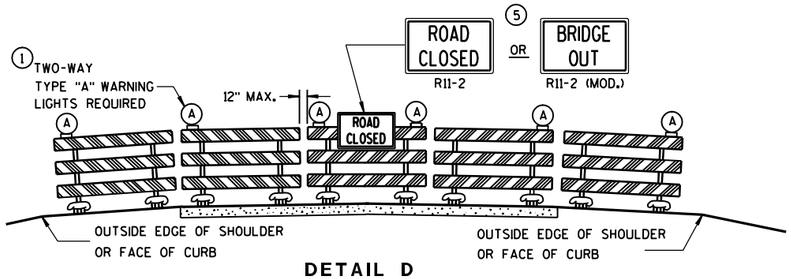

DETAIL D

ROAD CLOSURE BARRICADE DETAIL

APPROACH VIEW

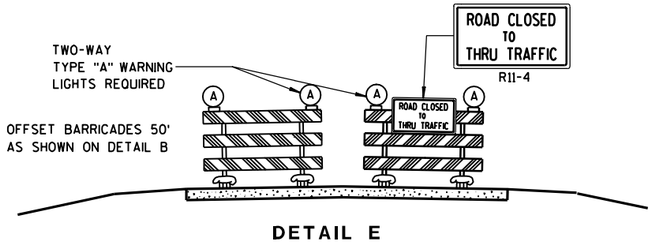

DETAIL E

LANE CLOSURE BARRICADE DETAIL

APPROACH VIEW

SEE SDD 15C2-4a FOR LEGEND

GENERAL NOTES

THE EXACT NUMBER, LOCATION, AND SPACING OF ALL SIGNS AND BARRICADES SHALL BE ADJUSTED TO FIT FIELD CONDITIONS AS APPROVED BY THE ENGINEER.

ANY SIGNS TEMPORARY OR EXISTING, WHICH CONFLICT WITH TRAFFIC CONTROL "IN USE" SHALL BE REMOVED OR COVERED AS NEEDED AND AS APPROVED BY THE ENGINEER.

THE SPACING BETWEEN TRAFFIC CONTROL SIGNS SHOULD BE ADJUSTED TO NOT CONFLICT WITH AND SHOULD PROVIDE A DESIRABLE MINIMUM OF 200 FEET CLEARANCE TO EXISTING SIGNS THAT WILL REMAIN IN PLACE.

BARRICADES THAT MUST BE MOVED FOR A WORK OPERATION SHALL BE IMMEDIATELY RE-ESTABLISHED UPON COMPLETION OF THE OPERATION OR, FOR CONTINUING OPERATIONS, AT THE END OF EACH WORKING DAY.

SIGNS THAT WILL BE IN PLACE LESS THAN 7 CONTINUOUS DAYS AND NIGHTS MAY BE MOUNTED ON PORTABLE SUPPORTS.

ALL TYPE III BARRICADES SHALL HAVE RAILS REFLECTORIZED ON BOTH FACES. STRIPES SHALL BE PROPERLY SLOPED DOWN TOWARD THE TRAFFIC SIDE OR AS SHOWN IN THE ROAD CLOSURE BARRICADE DETAIL D FOR FULL ROAD CLOSURES.

TYPE "A" LOW-INTENSITY FLASHING WARNING LIGHTS SHALL BE VISIBLE ON BOTH SIDES OF THE BARRICADE.

THE R11-2, R11-3, M4-9, R11-4 AND R10-61 SIGNS PLACED ON BARRICADES SHALL COVER NO MORE THAN THE TOP RAIL. THE SIGNS SHALL NOT COVER ANY PORTION OF THE MIDDLE OR BOTTOM RAILS.

THE REFLECTIVE SHEETING USED ON R11-2, R11-3, R11-4, R10-61 AND R1-1 SIGNS SHALL COMPLY WITH SUBSECTION 637.2.2.2 OF THE STANDARD SPECIFICATIONS.

"WO AND "MO" SIGNS ARE THE SAME AS "W" AND "M" SIGNS EXCEPT THE BACKGROUND IS ORANGE.

ALL SIGNS SHALL BE 48" X 48" UNLESS OTHERWISE NOTED BELOW:
- R11-2 SHALL BE 48" X 30".
- R11-3, R11-4 AND R10-61 SHALL BE 60" X 30".
- M4-9 SHALL BE 30" X 24".
- M3-X AND M4-8 SHALL BE 24" X 12". (30" X 15" IF NEEDED TO MATCH EXISTING SIGNS.)
- M1-4, M1-5A, AND M1-6 SHALL BE 24" X 24". (36" X 36" IF NEEDED TO MATCH EXISTING SIGNS.)
- M05-1 AND M06-1 SHALL BE 21" X 21". (30" X 30" IF NEEDED TO MATCH EXISTING SIGNS.)
- D1-X SHALL BE AS SHOWN ON SPECIFIC PROJECT SIGNING DETAIL SHEETS.
- R1-1 SHALL BE 36" X 36".

(1) TWO WARNING LIGHTS SHALL BE PROVIDED ON THE CENTER BARRICADE AND A MINIMUM OF ONE WARNING LIGHT SHALL BE PROVIDED ON EACH OF THE OTHER BARRICADES WITHIN THE ROADWAY LIMITS. SPACING OF THE WARNING LIGHTS SHALL BE UNIFORM TO THE EDGE OF ROADWAY AS SHOWN (APPROX. 8-FOOT LIGHT SPACING).

(2) THESE SIGNS AND BARRICADES ARE NOT REQUIRED IF ROAD CLOSURE BEGINS AT INTERSECTION.

(3) FOR ROAD CLOSURE WITHOUT LOCAL ACCESS TO PROJECT, SEE ROAD CLOSURE BARRICADE DETAIL D.

(4) FOR ROAD CLOSURE WITH LOCAL ACCESS TO PROJECT, SEE LANE CLOSURE BARRICADE DETAIL E.

(5) FOR BRIDGE OR CULVERT REPLACEMENTS, SUBSTITUTE "BRIDGE OUT" INSTEAD OF "ROAD CLOSED" ON R11-2 AND R11-3 SIGNS.

(6) INSTALL DETOUR AND COMMUNITY GUIDE SIGNS AND ARROWS ONLY IF SPECIFIED IN THE CONTRACT. IF THERE ARE EXISTING ROUTE MARKER ASSEMBLIES THAT WILL REMAIN IN PLACE, ADJUST THE LOCATION OF THE DETOUR ROUTE SIGNS TO CORRESPOND WITH THE EXISTING ASSEMBLIES. MODIFY EXISTING SIGNS WHERE POSSIBLE. SEE SPECIFIC PROJECT DETOUR SIGNING DETAIL SHEETS. IF DETOUR SIGNS ARE BEING INSTALLED BY OTHERS, PLACE THE CONTRACTED TRAFFIC CONTROL SIGNS TO ALLOW FOR PLACEMENT OF ALL WARNING, DETOUR AND GUIDE SIGNS AS SHOWN.

(7) "EAST" CARDINAL DIRECTION MARKERS AND RIGHT TURN ARROWS ARE SHOWN. USE OTHER CARDINAL DIRECTIONS AND ARROWS AS APPROPRIATE.

BARRICADES AND SIGNS FOR MAINLINE CLOSURES

STATE OF WISCONSIN
DEPARTMENT OF TRANSPORTATION

APPROVED
9/16/03
DATE

Thomas N. Notbohm for
CHIEF SIGNS AND MARKING ENGINEER

FHWA

6

S.D.D. 15 C 2-4b

6

S.D.D. 15 C 2-4b

THIS DRAWING PROVIDES GENERAL GUIDANCE ON TYPICAL DETOUR SIGN LAYOUT AND SPACING. SEE PROJECT DETOUR SIGNING SHEETS FOR SPECIFIC DETAILS FOR EACH PROJECT.

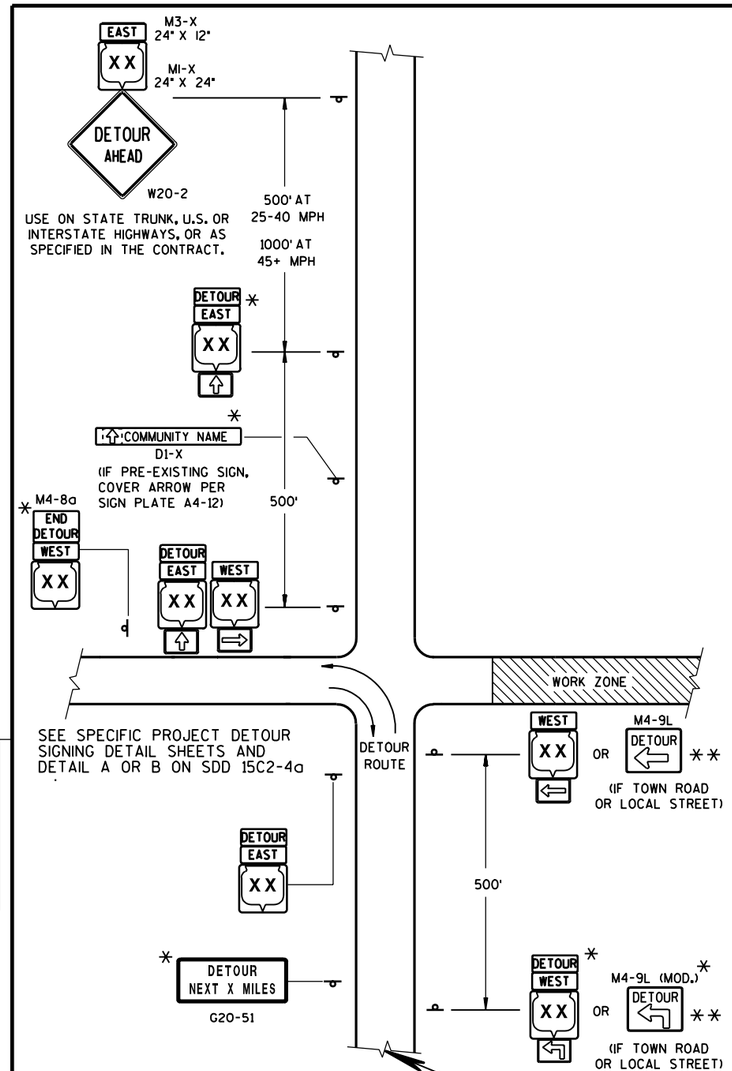

MATCH POINT

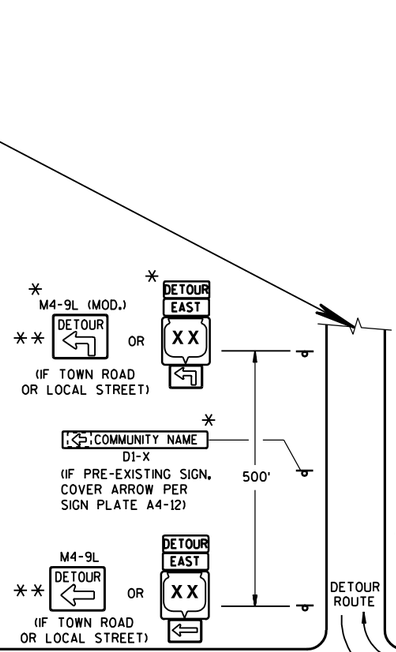

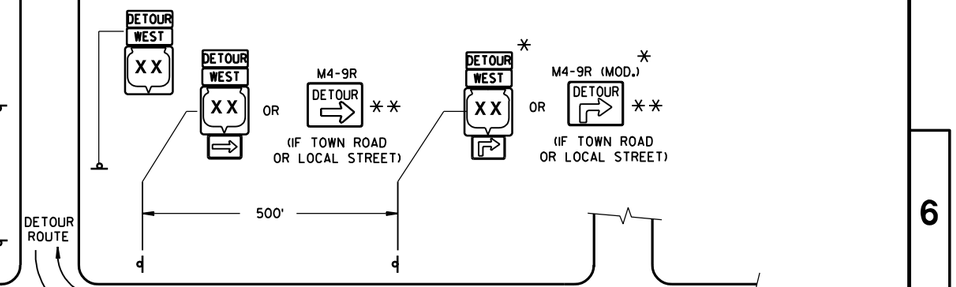

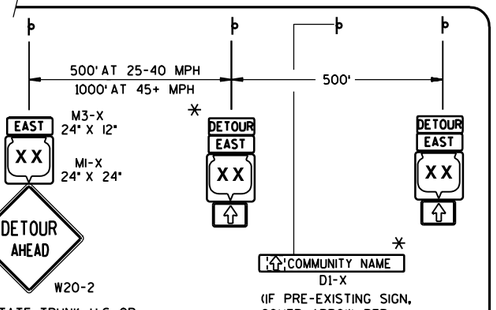

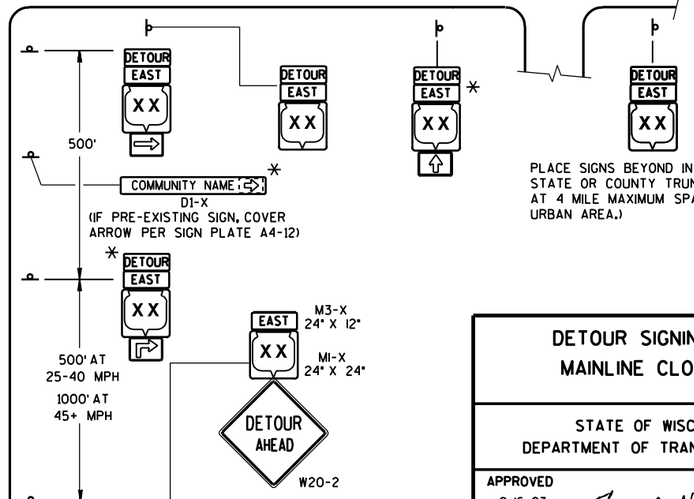

GENERAL NOTES

THE EXACT NUMBER, LOCATION AND SPACING OF ALL SIGNS SHALL BE ADJUSTED TO FIT FIELD CONDITIONS AS APPROVED BY THE ENGINEER.

IF THERE ARE EXISTING ROUTE MARKER ASSEMBLIES THAT WILL REMAIN IN PLACE, ADJUST THE LOCATION OF THE DETOUR ROUTE SIGNS TO CORRESPOND WITH THE EXISTING ASSEMBLIES. SEE SPECIFIC PROJECT DETOUR SIGNING DETAIL SHEETS. MODIFY EXISTING SIGNS WHERE POSSIBLE.

THE SPACING BETWEEN TRAFFIC CONTROL AND DETOUR SIGNS SHOULD BE ADJUSTED TO NOT CONFLICT WITH AND TO PROVIDE A DESIRABLE MINIMUM OF 200 FEET CLEARANCE TO EXISTING SIGNS THAT WILL REMAIN IN PLACE.

ANY SIGNS TEMPORARY OR EXISTING, WHICH CONFLICT WITH TRAFFIC CONTROL "IN USE", SHALL BE REMOVED OR COVERED AS NEEDED AND AS APPROVED BY THE ENGINEER.

SIGNS THAT WILL BE IN PLACE LESS THAN 7 CONTINUOUS DAYS AND NIGHTS MAY BE MOUNTED ON PORTABLE SUPPORTS.

"MO" SIGNS ARE THE SAME AS "M" SIGNS EXCEPT THE BACKGROUND IS ORANGE.

SIGN SIZES SHALL BE AS FOLLOWS:

M3-X AND M4-8 SHALL BE 24" X 12". (30" X 15" IF NEEDED TO MATCH EXISTING SIGNS.)
M1-4, M1-5A, AND M1-6 SHALL BE 24" X 24". (36" X 36" IF NEEDED TO MATCH EXISTING SIGNS.)
M05-1 AND M06-1 SHALL BE 21" X 21". (30" X 30" IF NEEDED TO MATCH EXISTING SIGNS.)
M4-9 SHALL BE 30" X 24".
M4-8a SHALL BE 24" X 18".
G20-51 SHALL BE 60" X 24".
W20-2 SHALL BE 48" X 48".
D1-X SHALL BE AS SHOWN ON SPECIFIC PROJECT SIGNING DETAIL SHEETS.

* OPTIONAL SIGNS. SEE SPECIFIC PROJECT DETOUR SIGNING DETAIL SHEETS.

** FOR A TOWN ROAD OR LOCAL STREET DETOURED ONTO A STATE TRUNK HIGHWAY, PLACE A ROAD NAME PLAQUE ABOVE THE M4-9 SIGN AS SPECIFIED IN THE CONTRACT.

LEGEND

- POST MOUNTED SIGN
- WORK ZONE
- DETOUR EAST XX — M4-8 / M3-X
- XX — M1-4
- COUNTY XX — M1-5A
- XX — M1-6
- M05-1
- M06-1
- M06-1

DETAIL F

DETOUR SIGNING

DETOUR SIGNING FOR MAINLINE CLOSURES

STATE OF WISCONSIN
DEPARTMENT OF TRANSPORTATION

APPROVED
9-16-03 — DATE
Thomas N. Notbohm for — CHIEF SIGNS AND MARKING ENGINEER
FHWA

S.D.D. 15 C 2-4c

6

S.D.D. 15 C 2-4c

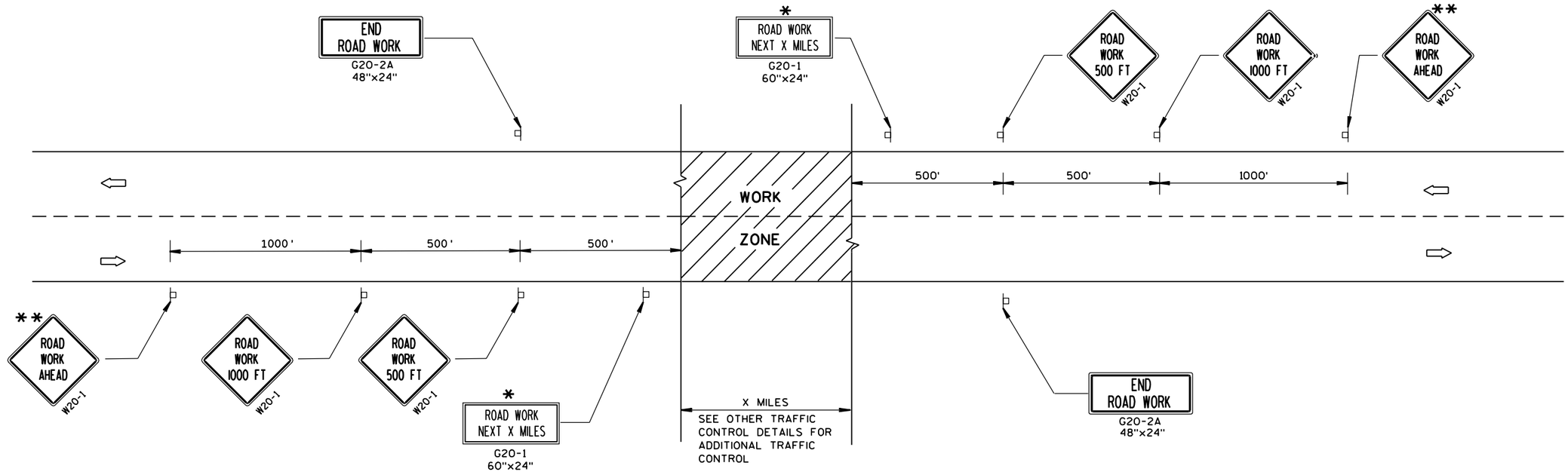

TYPICAL SIDEROAD APPROACH WARNING SIGN DETAIL

GENERAL NOTES

THE EXACT NUMBER, LOCATION, AND SPACING OF ALL SIGNS AND DEVICES SHALL BE ADJUSTED TO FIT FIELD CONDITIONS.

THE SPACING BETWEEN TRAFFIC CONTROL SIGNS SHOULD BE ADJUSTED TO NOT CONFLICT WITH AND SHOULD PROVIDE A MINIMUM OF 200 FEET (500 FEET DESIRABLE) CLEARANCE TO EXISTING SIGNS THAT WILL REMAIN IN PLACE.

ALL SIGNS ARE 48"x48" UNLESS OTHERWISE NOTED.

SIGNS THAT WILL BE IN PLACE LESS THAN 7 CONTINUOUS DAYS AND NIGHTS MAY BE MOUNTED ON PORTABLE SUPPORTS.

IF A "STOP" SIGN MUST BE REMOVED FOR A WORK OPERATION, A TEMPORARY "STOP" SIGN SHALL BE PLACED PRIOR TO THE SIGN REMOVAL, OR A FLAGGER SHALL BE PROVIDED UNTIL THE SIGN IS RE-ESTABLISHED.

* OMIT G20-1 SIGNS IF LENGTH OF WORK AREA IS 2 MILES OR LESS.

** PLACE ADDITIONAL W20-1 "ROAD WORK AHEAD" SIGN IF WORK AREA WITHIN THE PROJECT IS SEPARATED BY MORE THAN 2 MILES FROM PREVIOUS WORK AREA OR SIGNING.

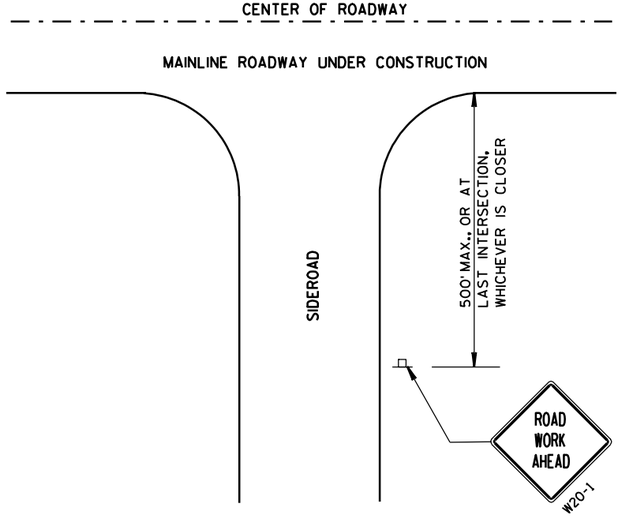

LEGEND

POST MOUNTED SIGN

DIRECTION OF TRAFFIC FLOW

TRAFFIC CONTROL,
ADVANCE WARNING SIGNS
45 M.P.H. OR GREATER
TWO-WAY UNDIVIDED ROAD OPEN TO TRAFFIC

STATE OF WISCONSIN
DEPARTMENT OF TRANSPORTATION

APPROVED
5/23/00
DATE
Chester J. Spang
CHIEF SIGNS AND MARKING ENGINEER
FHWA

GENERAL NOTES

DETAILS OF INSTALLATION, MATERIALS AND WORKMANSHIP NOT SHOWN ON THIS DRAWING SHALL CONFORM TO THE PERTINENT REQUIREMENTS OF THE STANDARD SPECIFICATIONS AND APPLICABLE SPECIAL PROVISIONS.

ALL LETTERS, ARROWS AND SYMBOLS SHALL BE IN CONFORMANCE WITH REQUIREMENTS INCLUDED IN "STANDARD ALPHABETS FOR HIGHWAY SIGNS AND PAVEMENT MARKING" BOOK BY THE FEDERAL HIGHWAY ADMINISTRATION. ALL LETTERS, ARROWS AND SYMBOLS SHALL BE WHITE AND REFLECTORIZED. SMALL DIFFERENCES IN DIMENSIONS WITHIN THE TOLERANCES OF THAT BOOK ARE ACCEPTABLE.

A DETAILED DRAWING OF THE HANDICAPPED PARKING SYMBOL IS ILLUSTRATED IN THE "STANDARD HIGHWAY SIGNS MANUAL" BY THE FEDERAL HIGHWAY ADMINISTRATION.

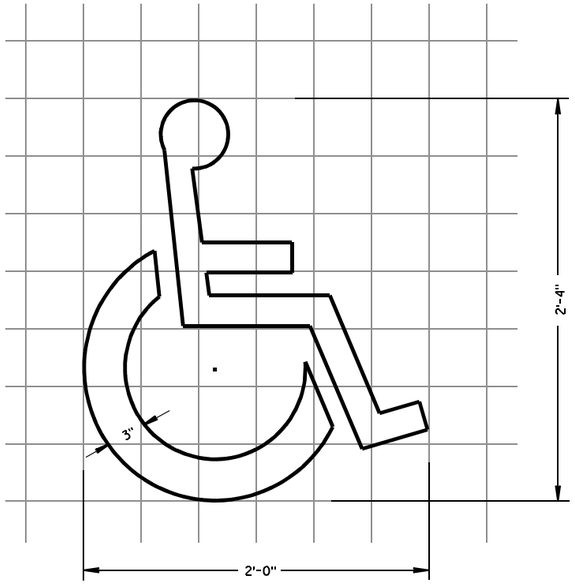

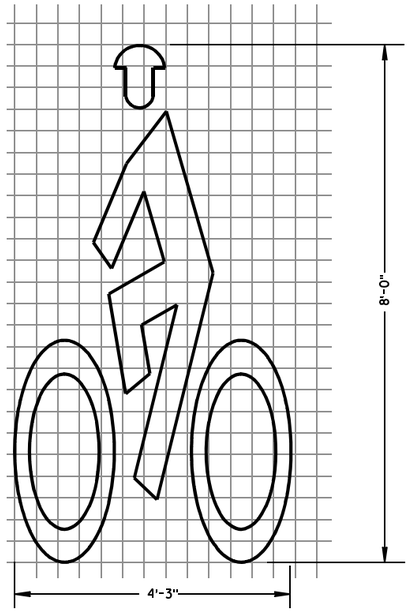

BIKE CROSSING SYMBOL

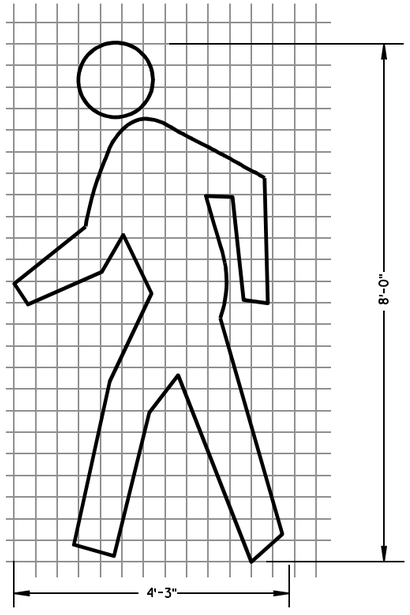

PEDESTRIAN SYMBOL

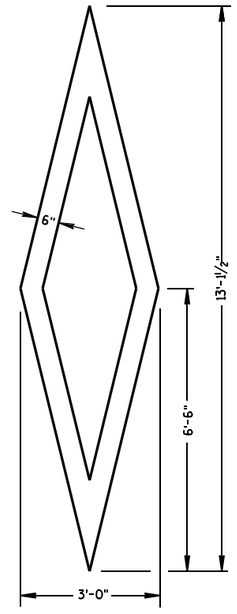

PREFERENTIAL LANE SYMBOL

6

S.D.D. 15 C 7-11a

PAVEMENT MARKING SYMBOLS

STATE OF WISCONSIN
DEPARTMENT OF TRANSPORTATION

APPROVED

5/13/10
DATE

/S/ Thomas N Notbohm
STATE TRAFFIC ENGINEER OF DESIGN

FHWA

6

S.D.D. 15 C 7-11a

GENERAL NOTES

DETAILS OF INSTALLATION, MATERIALS AND WORKMANSHIP NOT SHOWN ON THIS DRAWING SHALL CONFORM TO THE PERTINENT REQUIREMENTS OF THE STANDARD SPECIFICATIONS AND APPLICABLE SPECIAL PROVISIONS.

ALL LETTERS, ARROWS AND SYMBOLS SHALL BE IN CONFORMANCE WITH REQUIREMENTS INCLUDED IN "STANDARD ALPHABETS FOR HIGHWAY SIGNS AND PAVEMENT MARKING" BOOK BY THE FEDERAL HIGHWAY ADMINISTRATION. ALL LETTERS, ARROWS AND SYMBOLS SHALL BE WHITE AND REFLECTORIZED. SMALL DIFFERENCES IN DIMENSIONS WITHIN THE TOLERANCES OF THAT BOOK ARE ACCEPTABLE.

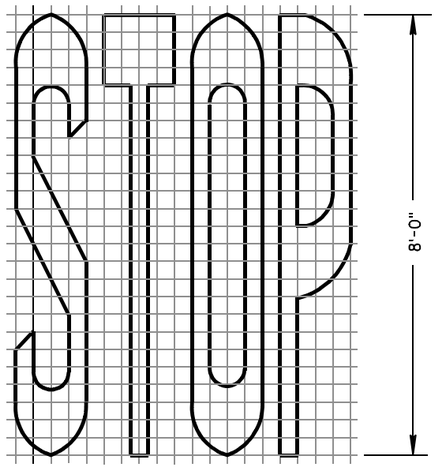

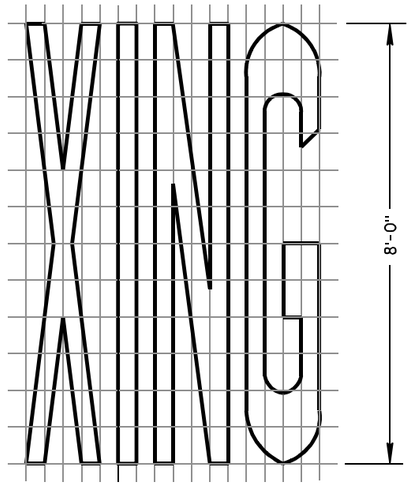

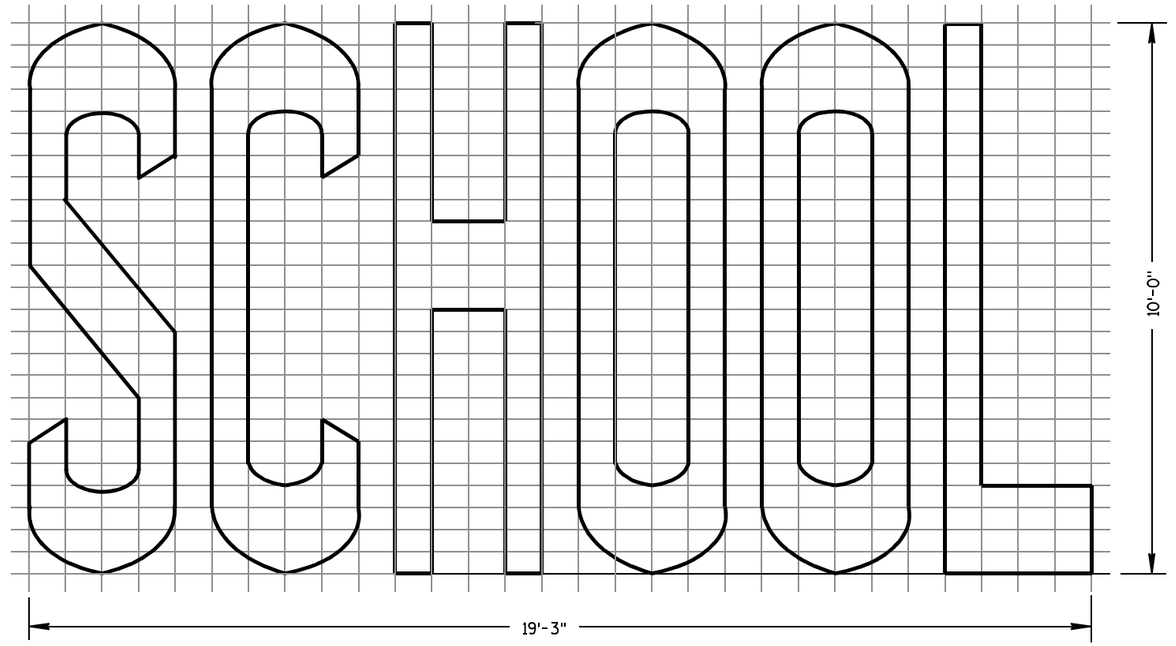

TWO-LANE

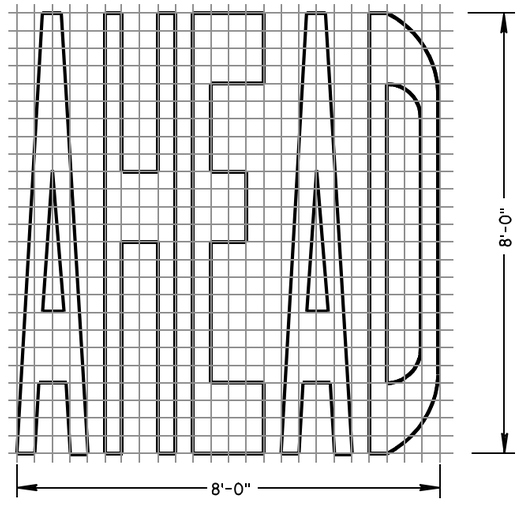

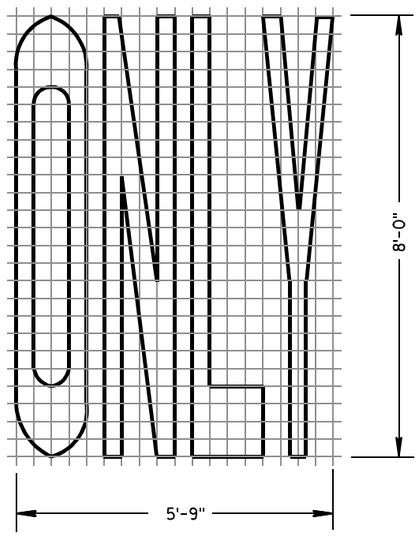

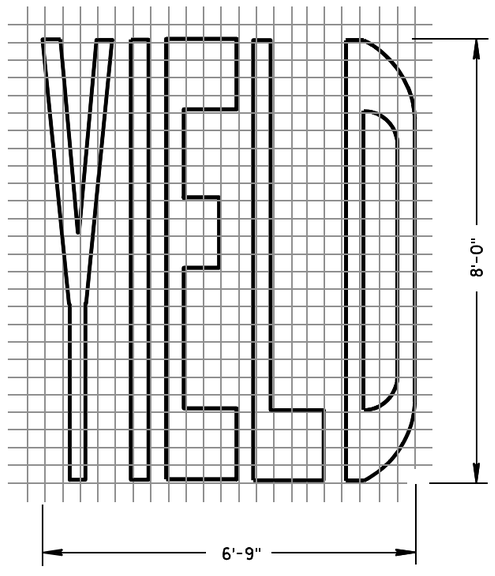

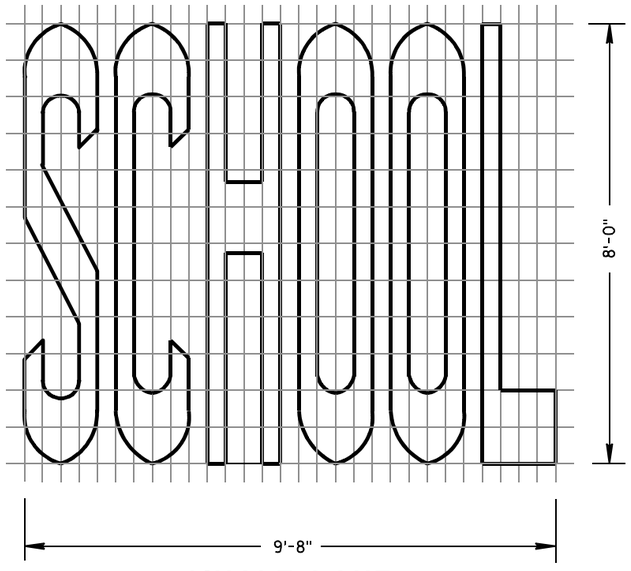

SINGLE-LANE

PAVEMENT MARKING WORDS

STATE OF WISCONSIN
DEPARTMENT OF TRANSPORTATION

APPROVED
5-13-10 — DATE
/S/ Thomas N. Notbohm — STATE TRAFFIC ENGINEER OF DESIGN
FHWA

6

S.D.D. 15 C 7-11b

6

S.D.D. 15 C 7-11b

GENERAL NOTES

DETAILS OF INSTALLATION, MATERIALS AND WORKMANSHIP NOT SHOWN ON THIS DRAWING SHALL CONFORM TO THE PERTINENT REQUIREMENTS OF THE STANDARD SPECIFICATIONS AND APPLICABLE SPECIAL PROVISIONS.

ALL LETTERS, ARROWS AND SYMBOLS SHALL BE IN CONFORMANCE WITH REQUIREMENTS INCLUDED IN "STANDARD ALPHABETS FOR HIGHWAY SIGNS AND PAVEMENT MARKING" BOOK BY THE FEDERAL HIGHWAY ADMINISTRATION. ALL LETTERS, ARROWS AND SYMBOLS SHALL BE WHITE AND REFLECTORIZED. SMALL DIFFERENCES IN DIMENSIONS WITHIN THE TOLERANCES OF THAT BOOK ARE ACCEPTABLE.

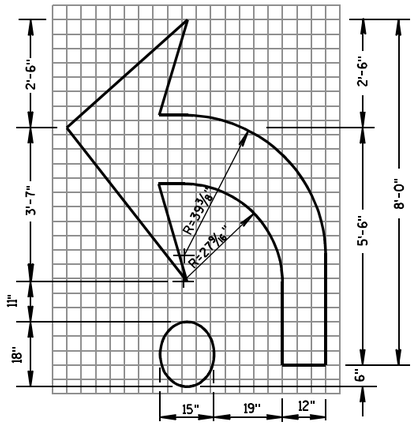

TYPE 2R

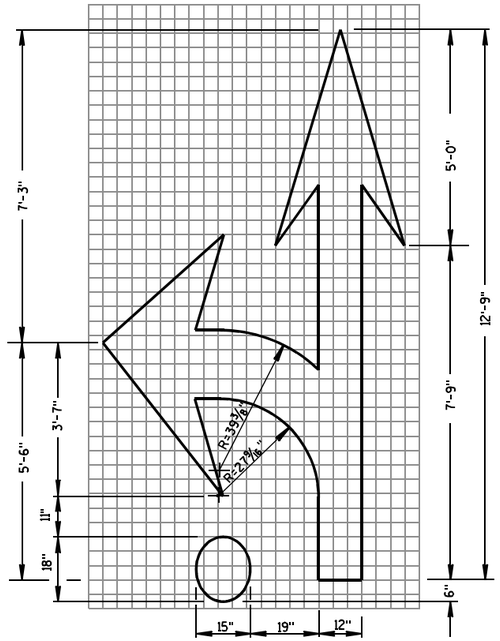

TYPE 3R

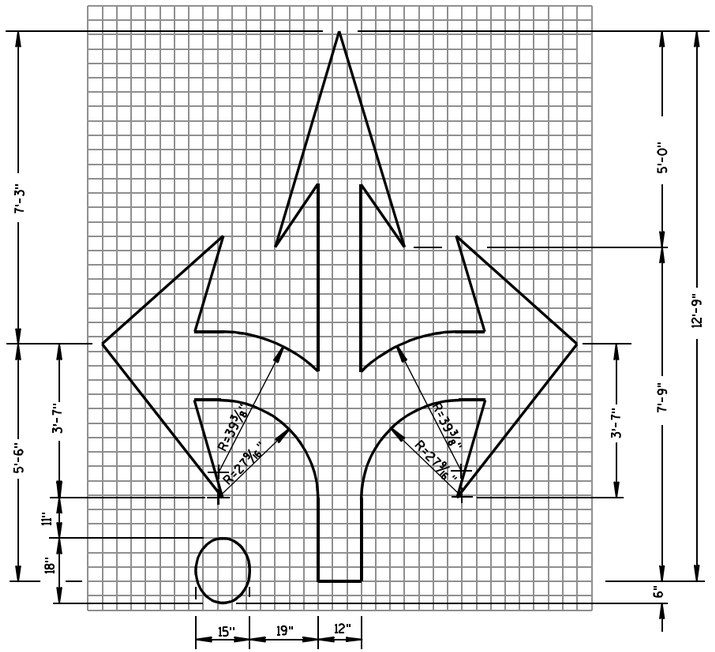

TYPE 6R

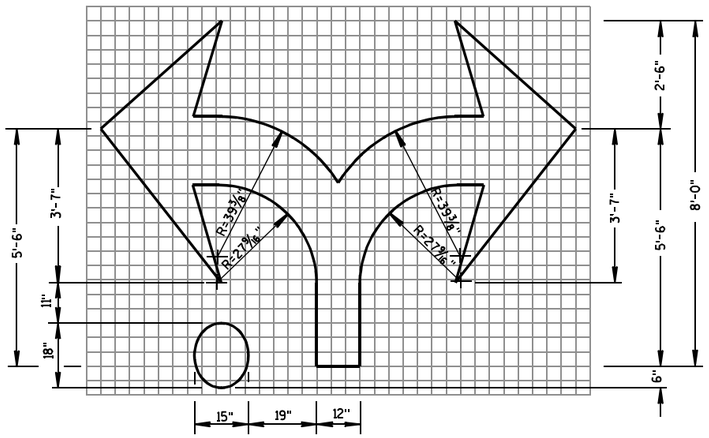

TYPE 7R

ROUNDABOUT ARROWS

STATE OF WISCONSIN
DEPARTMENT OF TRANSPORTATION

APPROVED
5/13/10
DATE
/S/ Thomas N. Notbohm
STATE TRAFFIC ENGINEER OF DESIGN
FHWA

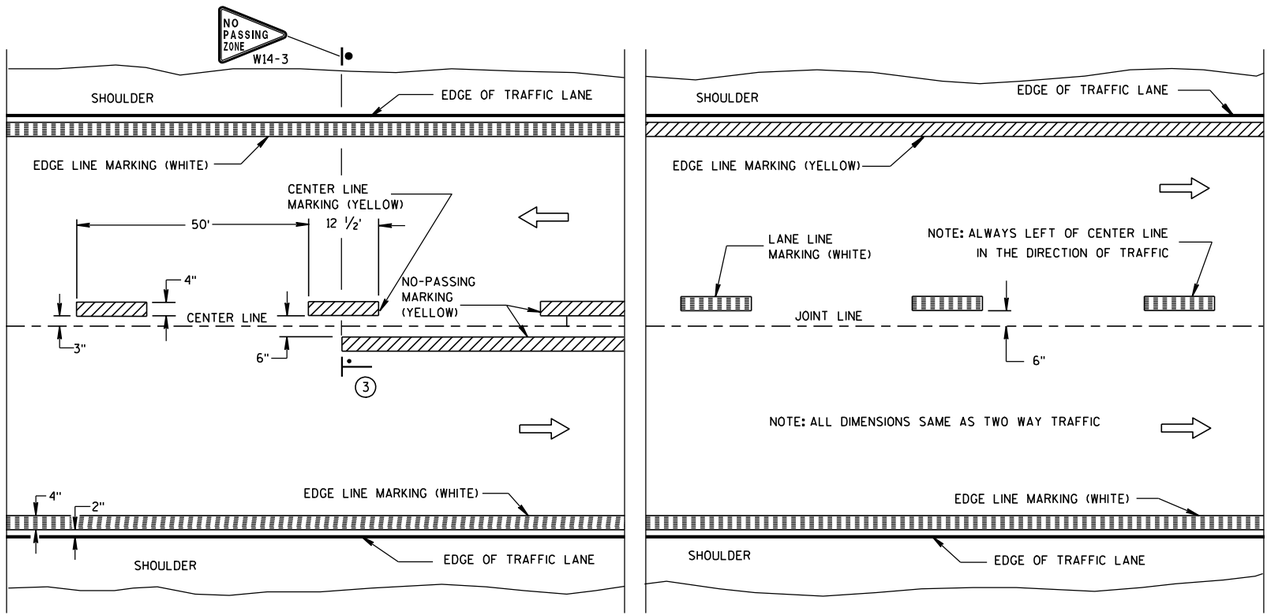

TWO WAY TRAFFIC

ONE WAY TRAFFIC

PERMANENT PAVEMENT MARKING

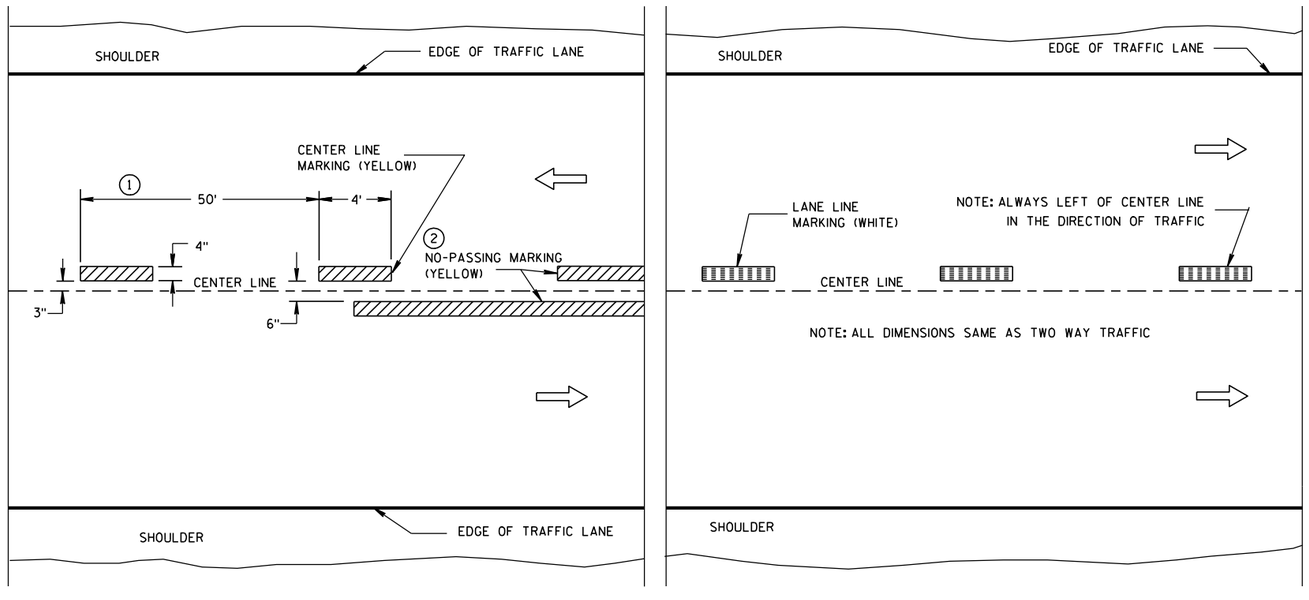

TWO WAY TRAFFIC

ONE WAY TRAFFIC

TEMPORARY (INTERMEDIATE) PAVEMENT MARKING

(SHOWS CYCLE FOR TEMPORARY CENTER LINE OR TEMPORARY LANE LINE MARKING)

GENERAL NOTES

DETAILS OF CONSTRUCTION NOT SHOWN ON THIS DRAWING SHALL CONFORM TO STANDARD SPECIFICATIONS AND SPECIAL PROVISIONS.

① HALF CYCLE LENGTHS (25'±) WITH 2' MINIMUM STRIPE LENGTHS SHALL BE PROVIDED ON ROADWAYS (INCLUDING TEMPORARY TRAVELED WAYS) WITH REVERSE CURVATURE, CURVATURE OF OVER 5 DEGREES OR WHEN DIRECTED BY THE ENGINEER TO MARK UNUSUAL ALIGNMENT OF THE TRAVELED WAY.

② NO PASSING ZONE TEMPORARY PAVEMENT MARKING IS REQUIRED TO BE PLACED, WHERE APPROPRIATE, ALONG WITH CENTERLINE TEMPORARY PAVEMENT MARKING WHEN A SAME DAY PERMANENT PAVEMENT MARKING ITEM IS INCLUDED IN THE CONTRACT.

③ NO PASSING ZONE MARKINGS ARE PLACED ACCORDING TO "T" MARKINGS. IF EXISTING NO PASSING ZONE W14-3 SIGNS ARE BEYOND 50 FEET IN EITHER DIRECTION, THE SIGNS SHALL BE MOVED TO THE "T" MARKINGS.

NOTE

ARROW SYMBOL (⇨) SHOWS DIRECTION OF TRAVEL

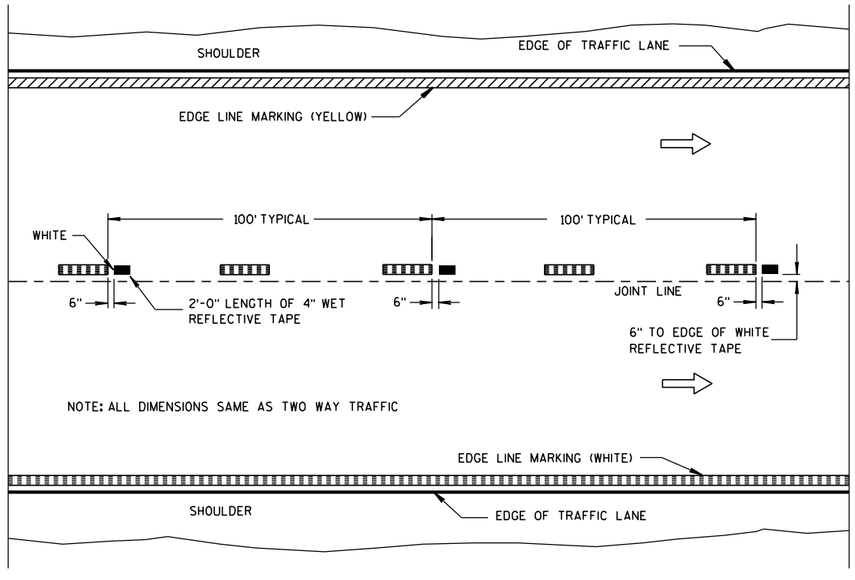

WET REFLECTIVE TAPE SUPPLEMENT TO
SPRAYED OR NON WET REFLECTIVE TAPE LANE LINE

LEGEND

"T" MARKING

POST MOUNTED SIGN

PAVEMENT MARKING
(MAINLINE)

STATE OF WISCONSIN
DEPARTMENT OF TRANSPORTATION

APPROVED

5-13-10
DATE

/S/ Thomas N. Notbohm
STATE TRAFFIC ENGINEER OF DESIGN

FHWA

6

S.D.D. 15 C 8-13a

6

S.D.D. 15 C 8-13a

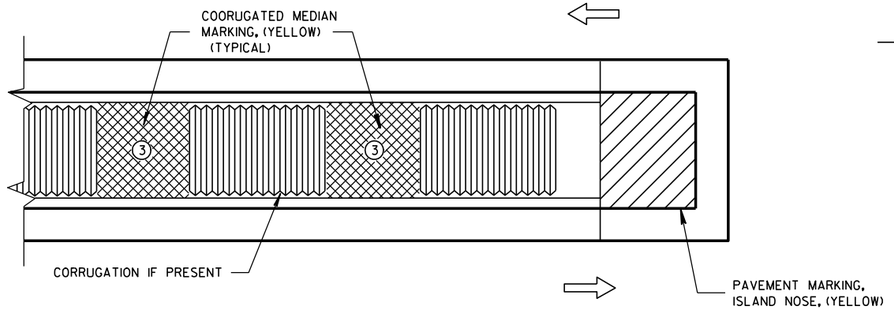

MEDIAN ISLAND WITH SQUARE BLUNT NOSE

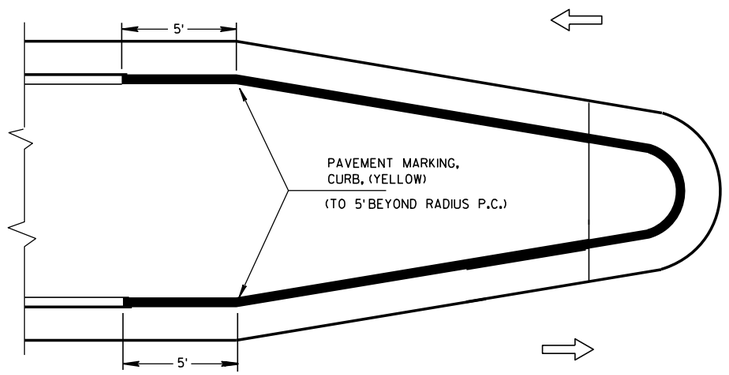

MEDIAN ISLAND WITH ROUND BLUNT NOSE

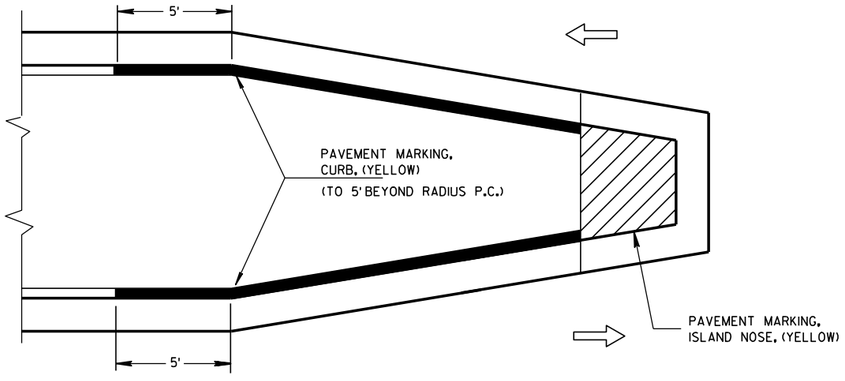

MEDIAN ISLAND WITH SLOPED NOSE

TYPICAL PLACEMENT OF PAVEMENT MARKING ON MEDIAN ISLANDS

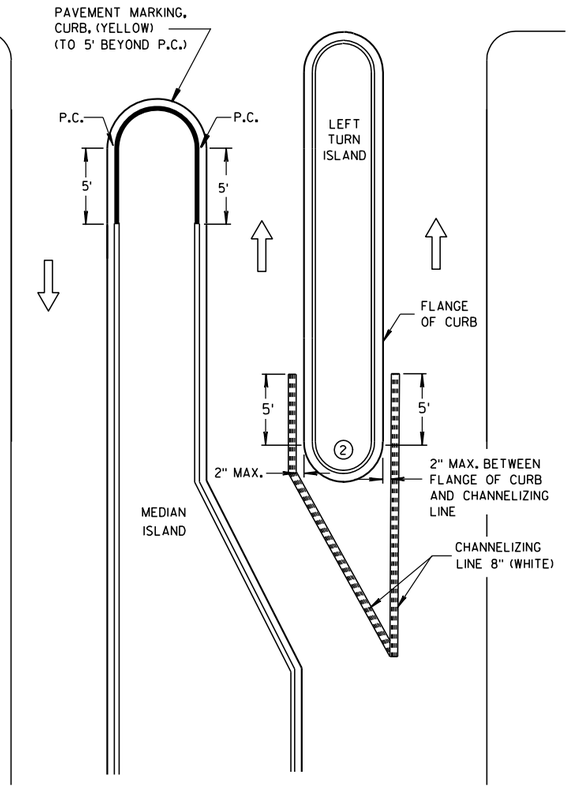

LEFT TURN & MEDIAN ISLAND

GENERAL NOTES

1. STOP LINE IS REQUIRED ONLY WHEN SPECIFIED IN THE CONTRACT.
2. DO NOT MARK CURB NOSES THAT SEPARATE LANES OF TRAFFIC TRAVELING IN THE SAME DIRECTION.
3. WHEN CONCRETE CORRUGATED MEDIAN IS CONSTRUCTED TO SEPARATE TRAFFIC OPERATING IN THE OPPOSING DIRECTION YELLOW PAVEMENT MARKING SHALL BE APPLIED TO THE FLAT PORTION OF THE CONCRETE CORRUGATED MEDIAN. THE ITEM OF PAVEMENT MARKING, CONCRETE CORRUGATED MEDIAN, WILL BE MEASURED IN PLACE AND AND ACCEPTED IN ACCORDANCE WITH THE CONTRACT AND PAID FOR AT THE CONTRACT UNIT PRICE PER SQUARE FOOT.

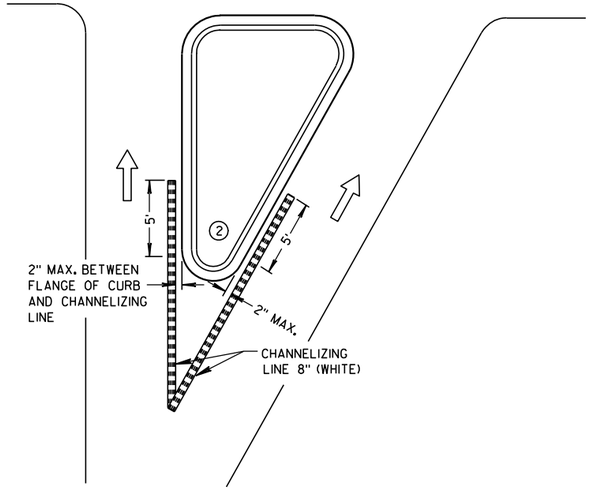

RIGHT TURN ISLAND

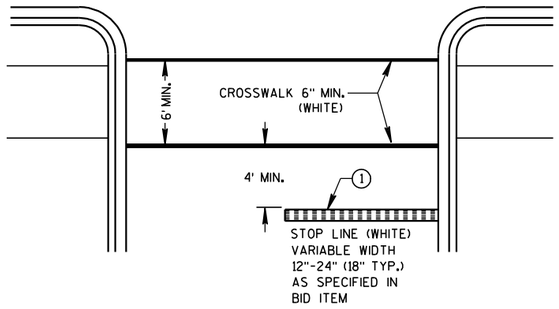

STOP LINE AND CROSSWALK

LEGEND

- ISLAND NOSE MARKING
- CURB MAKING
- CORRUGATED MEDIAN MARKING
- DIRECTION OF TRAVEL

PAVEMENT MARKING (ISLANDS, STOP LINE & CROSS WALK)

STATE OF WISCONSIN
DEPARTMENT OF TRANSPORTATION

6

S.D.D. 15 C 8-13f

6

S.D.D. 15 C 8-13f

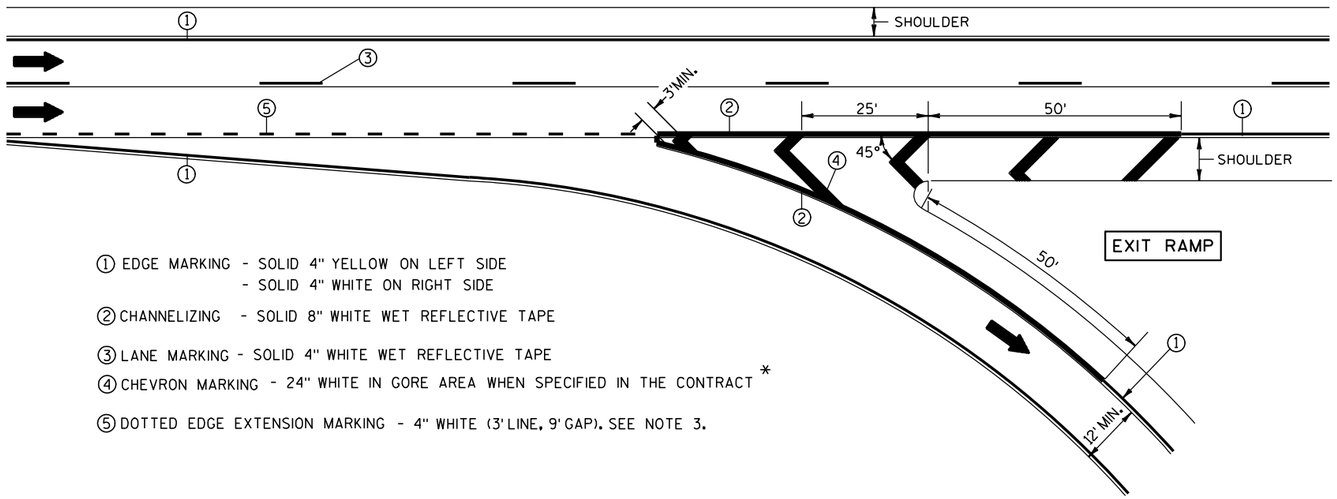

① EDGE MARKING - SOLID 4" YELLOW ON LEFT SIDE
- SOLID 4" WHITE ON RIGHT SIDE

② CHANNELIZING - SOLID 8" WHITE WET REFLECTIVE TAPE

③ LANE MARKING - SOLID 4" WHITE WET REFLECTIVE TAPE

④ CHEVRON MARKING - 24" WHITE IN GORE AREA WHEN SPECIFIED IN THE CONTRACT *

⑤ DOTTED EDGE EXTENSION MARKING - 4" WHITE (3' LINE, 9' GAP). SEE NOTE 3.

NOTES:

1. ARROWS SHOWN ON THIS MARKING PLAN DESIGNATE TRAFFIC FLOW, AND SHALL NOT BE TAKEN AS PROPOSED PAVEMENT MARKINGS.

2. PLACE WHITE EDGE OF TAPE 6" LEFT FROM JOINT.

3. 3' LINE 9' GAP, EXCEPT RETRACE THE EXISTING LINE-GAP PATTERN WHERE EXISTING MARKINGS ARE IN PLACE.

* REFER TO DESIGN NOTES.

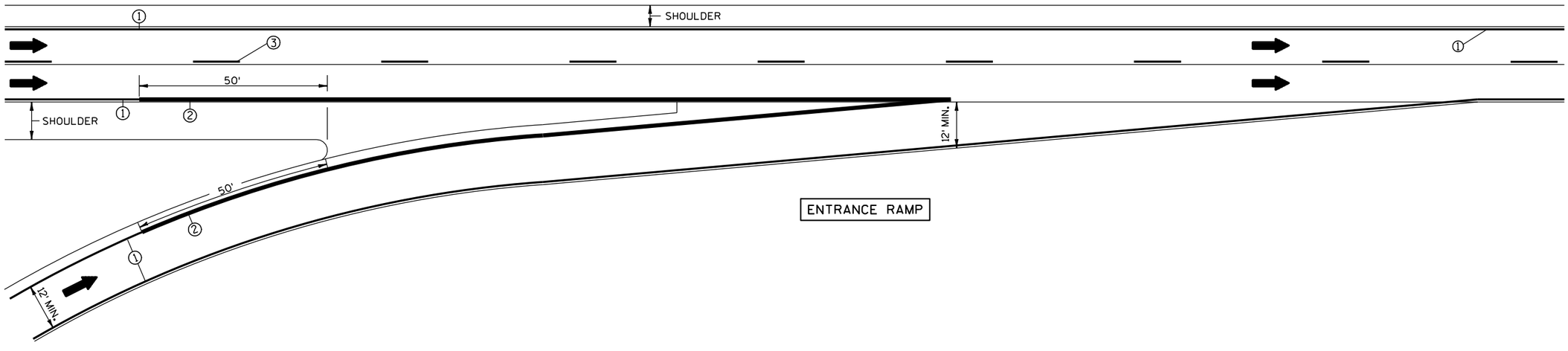

6

S.D.D. 15 C 8-13g

PAVEMENT MARKING
(RAMPS AND GORES)

STATE OF WISCONSIN
DEPARTMENT OF TRANSPORTATION

6

S.D.D. 15 C 8-13g

NOTES:

1. SEE STANDARD DETAIL DRAWING 15 C 10 FOR SPRAYED OR NON WET REFLECTIVE LINE SEGMENTS.

2. ARROWS SHOWN ON THIS MARKING PLAN DESIGNATE TRAFFIC FLOW, AND SHALL NOT BE TAKEN AS PROPOSED PAVEMENT MARKINGS.

3. PLACE WHITE EDGE OF TAPE 6" LEFT FROM JOINT.

4. 3' LINE 9' GAP, EXCEPT RETRACE THE EXISTING LINE-GAP PATTERN WHERE EXISTING MARKINGS ARE IN PLACE.

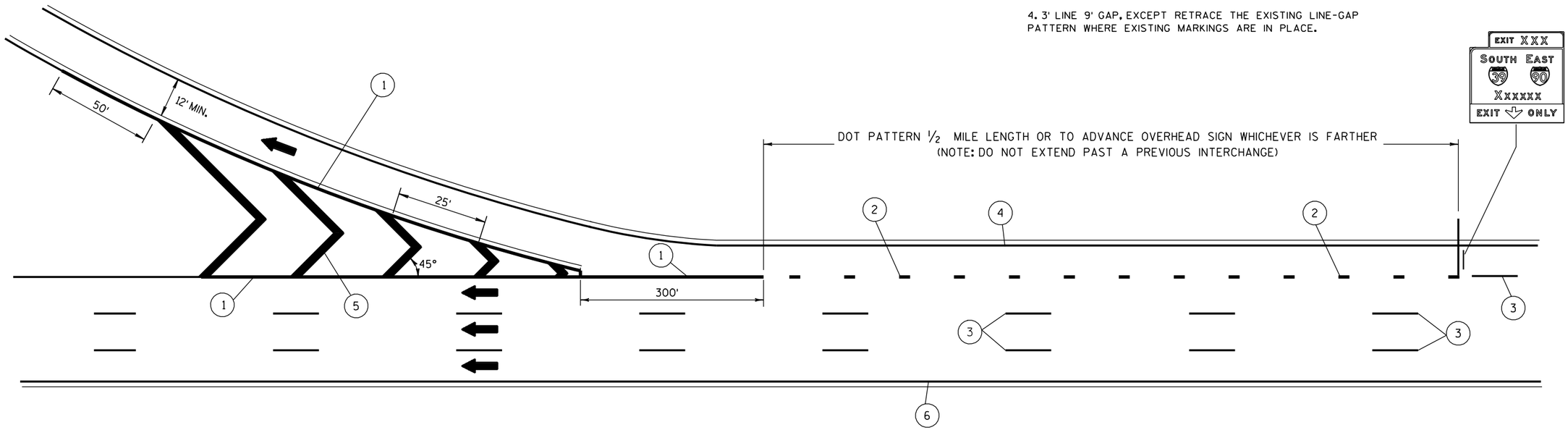

1. CHANNELIZING - SOLID 8" WHITE WET RELECTIVE TAPE
2. 3' LINE, 9' GAP SOLID 8" WHITE WET REFLECTIVE TAPE. SEE NOTE 4.
3. SOLID 4" WHITE WET REFLECTIVE TAPE
4. 4" WHITE EDGELINE
5. CHEVRON MARKING - 24" WHITE WHEN SPECIFIED IN THE CONTRACT
6. 4" YELLOW EDGELINE

6

S.D.D. 15 C 8-13h

LANE DROP
PAVEMENT MARKING

STATE OF WISCONSIN
DEPARTMENT OF TRANSPORTATION

6

S.D.D. 15 C 8-13h

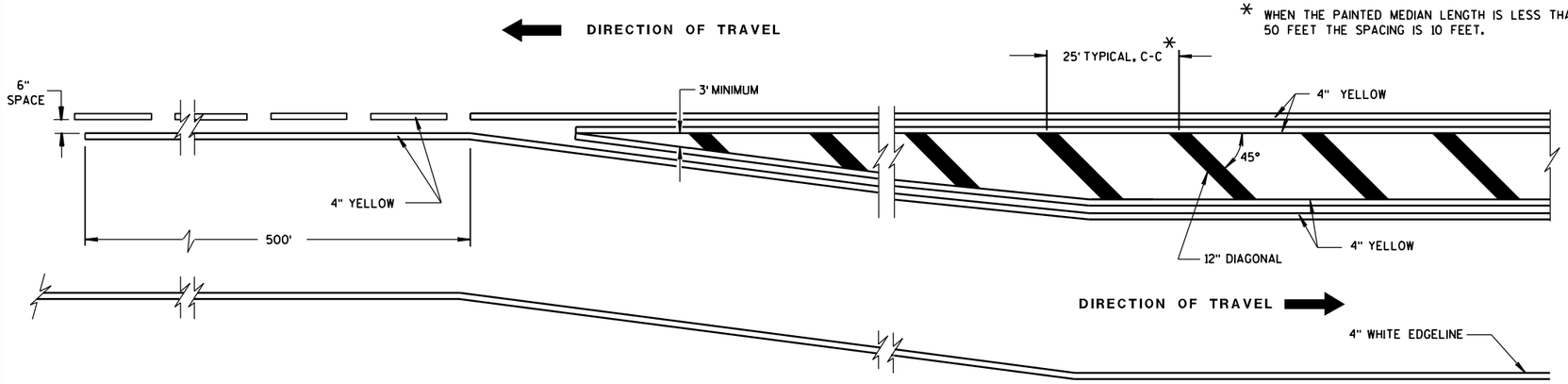

MEDIAN ISLAND DETAIL

GENERAL NOTE

DIAGONALS ARE OPTIONAL WHEN PAINTED ISLAND IS LESS THAN 6 FEET AT WIDEST POINT.

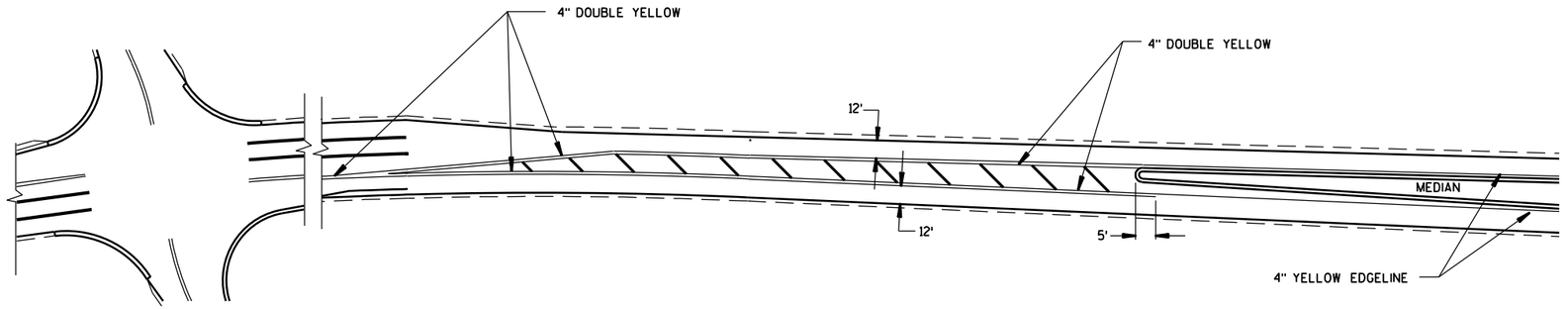

APPROACH MARKINGS FOR OTHER MEDIAN TYPES

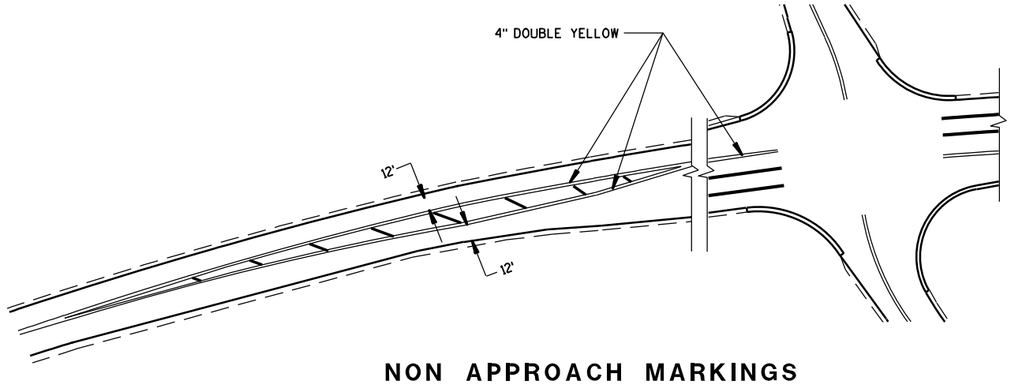

NON APPROACH MARKINGS

MEDIAN ISLAND MARKING	
STATE OF WISCONSIN DEPARTMENT OF TRANSPORTATION	
APPROVED 2-5-09 DATE	/S/ Thomas N. Notbohm STATE TRAFFIC ENGINEER OF DESIGN
FHWA	

6

S.D.D. 15 C 18-3

6

S.D.D. 15 C 18-3

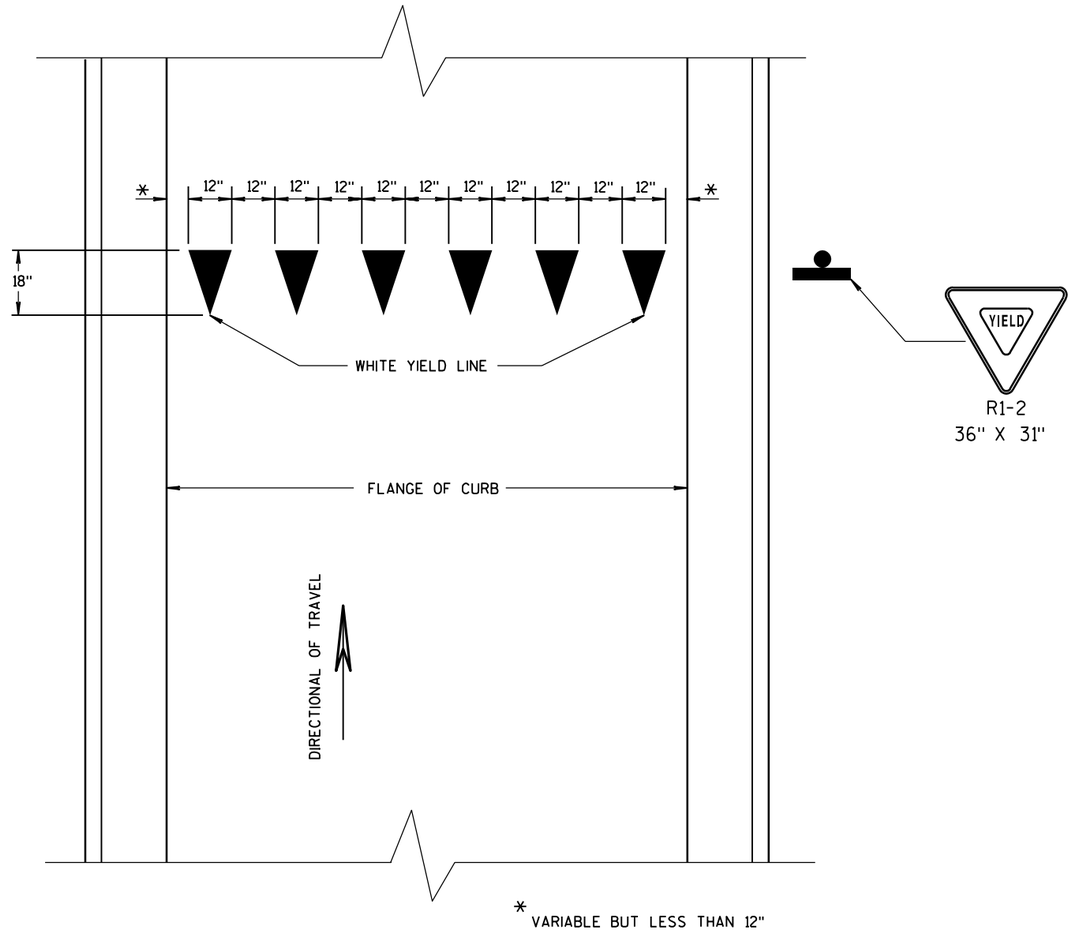

YIELD LINE

R1-2
36" X 31"

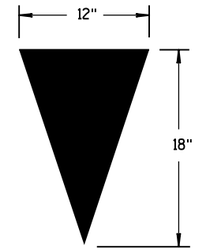

YIELD TRIANGLE

6

S.D.D. 15 C 20-1

YIELD MARKINGS

STATE OF WISCONSIN
DEPARTMENT OF TRANSPORTATION

APPROVED
1/28/05
DATE

Thomas N. Notbohm
STATE TRAFFIC ENGINEER OF DESIGN

FHWA

6

S.D.D. 15 C 20-1

GENERAL NOTE

APPLIES TO ISLANDS AT LEFT TURNS AT ONE WAY ROADWAYS AS WELL.

SEE MISCELLANEOUS QUANTITIES FOR SIGN SIZE.

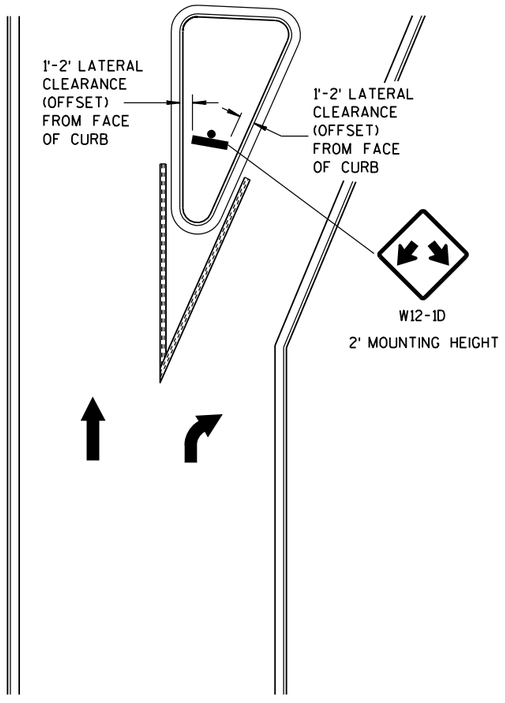

LARGE RIGHT TURN ISLAND

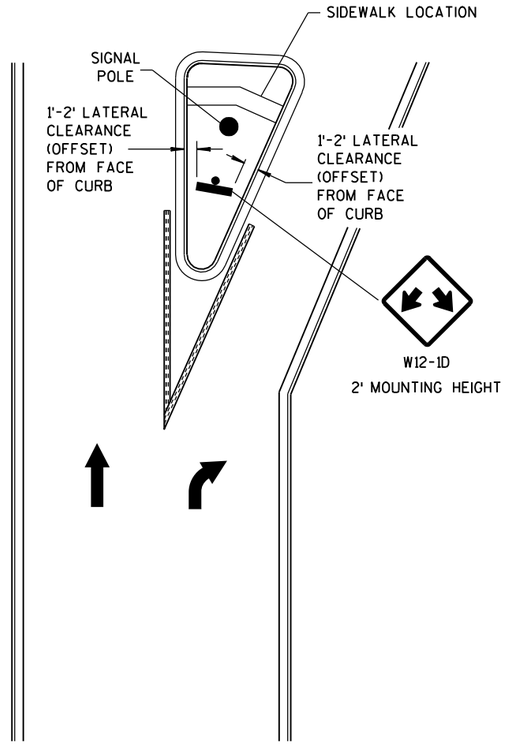

LARGE RIGHT TURN ISLAND
WITH SIGNAL POLE

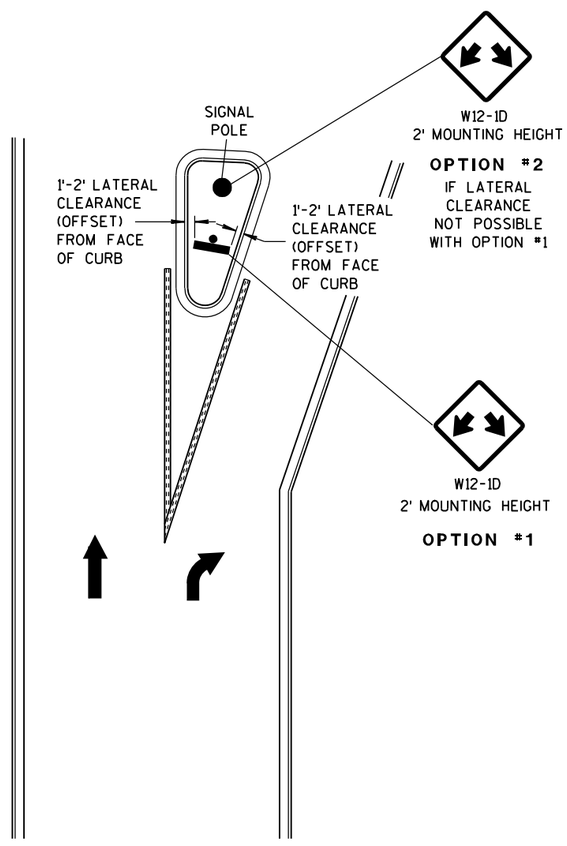

SMALL RIGHT TURN ISLAND

DOUBLE ARROW WARNING SIGN PLACEMENT

DOUBLE ARROW WARNING SIGN PLACEMENT	
STATE OF WISCONSIN DEPARTMENT OF TRANSPORTATION	
APPROVED 10-22-08 DATE	/S/ Thomas N. Notbohm STATE TRAFFIC ENGINEER OF DESIGN
FHWA	

6

S.D.D. 15 C 27-1

6

S.D.D. 15 C 27-1

NOTES

1. All Signs Type II - Type H Reflective - reference WIS DOT Standard Specification for HIGHWAY and STRUCTURE CONSTRUCTION latest edition.
2. Color:
   Background - Green
   Message - White
3. Message Series - C

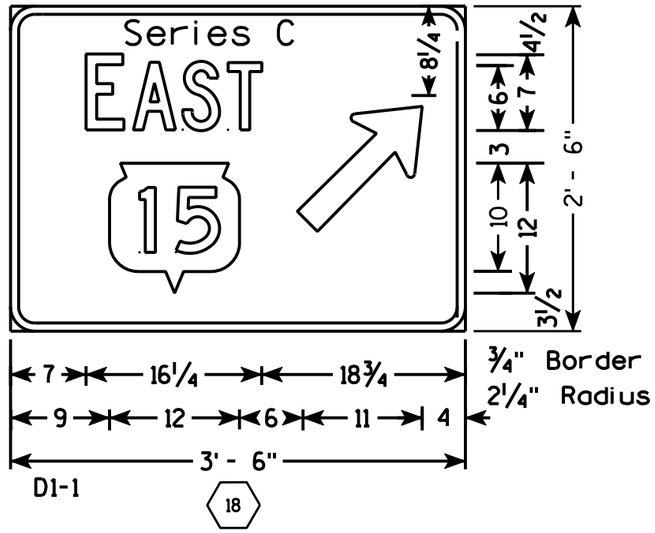

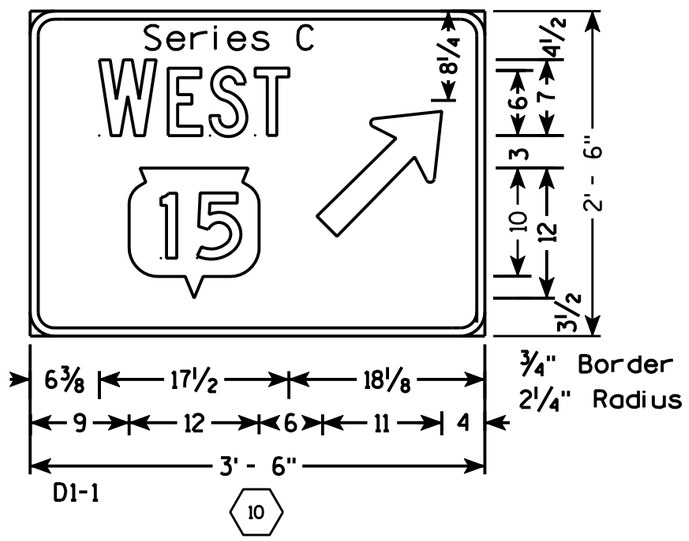

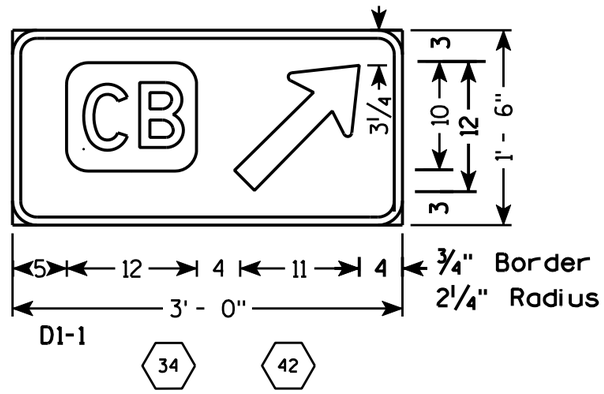

PLAN SHEET PRODUCED
BY WisDOT-NE REGION

PROJECT NO: 1146-39-71	HWY: STH 15	COUNTY: OUTAGAMIE	SIGN DETAILS	SHEET NO: 180	E

TYPICAL ASSEMBLIES

J1-1

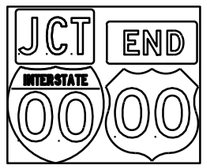

J1-2

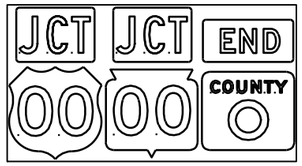

J1-3

J2-1

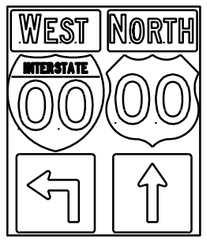

J2-2

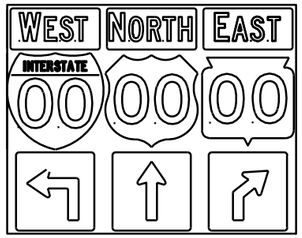

J2-3

JV

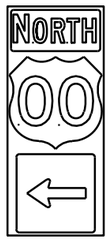

J3-1

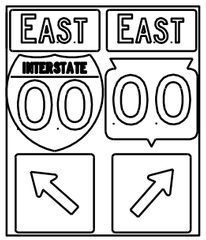

J3-2

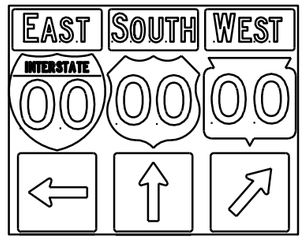

J3-3

J4-1

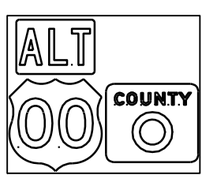

J4-2

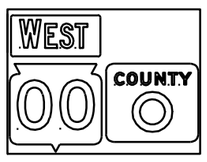

J4-2

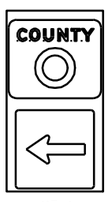

J13-1

J12-1

J32-1

J33-1

J23-1

J22-1

NOTES

1. Signs are Type II - Type H Reflective - reference WIS DOT Standard Specification for HIGHWAY and STRUCTURE CONSTRUCTION latest edition.
2. Color:
   Background - Black Non-reflective
   Message - see Note 5
3. Message Series - See Note 5
4. Corners shall be square since base material is plywood.
5. The colors and message spacing on each marker shall be according to the applicable route marker panel specifications.
6. Certain marker heads require the component pieces to be the same color. As an example, all the components used with an M1-1 Interstate marker shall be blue.
7. Single panel j-assemblies shall only be used with route marker shields that are same size. If the route marker shields are different size use multiple piece component.
8. Route assemblies that have 24 inch route shields and have dimensions greater than 48 inches (both vertical and horizontal) shall have one horizontal splice between the arrows and route shields. Vertical splices shall not be used on route assemblies with a horizontal dimension of 144 inches or less. The contractor shall not use more than one vertical joint per sign and the joint shall be between route shields.
9. Route assemblies that have 36 inch shields and have dimensions greater than 48 inchs (both vertical and horizontal) shall have two horizontal splices. One horizontal splice shall be between the cardinal direction and route shields and the other horizontal splice shall be between the arrows and route shields. Vertical splices shall not be used on route assemblies with a horizontal dimension of 144 or less. The contractor shall not use more than one vertical joint per sign and the joint shall be between route shields.

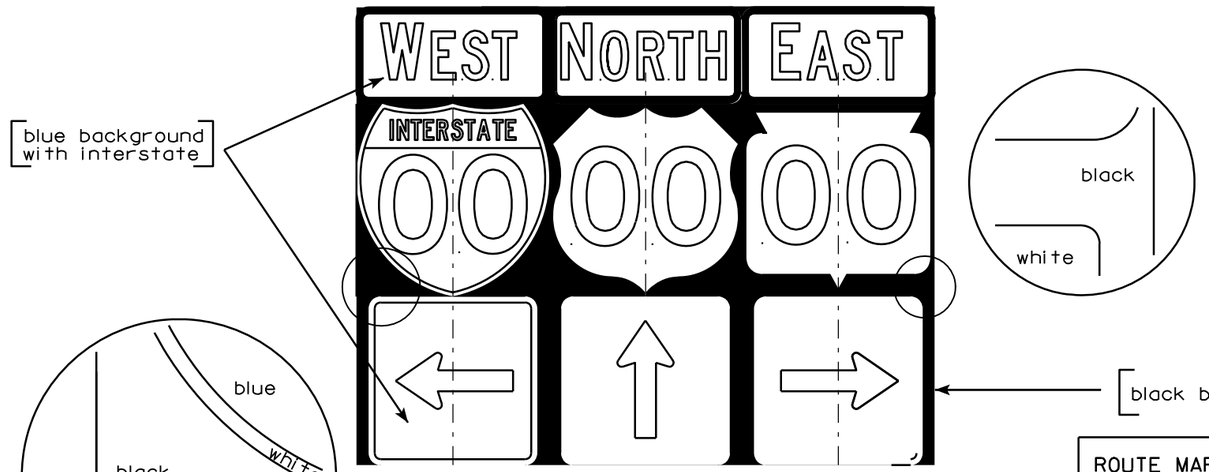

ROUTE MARKERS & COMPONENTS IN TYPICAL ASSEMBLIES

WISCONSIN DEPT OF TRANSPORTATION

APPROVED Matthew R Rauch
for State Traffic Engineer

DATE 10/21/09 PLATE NO. A2-1S.6

7

7

PROJECT NO:

SHEET NO: 181 E

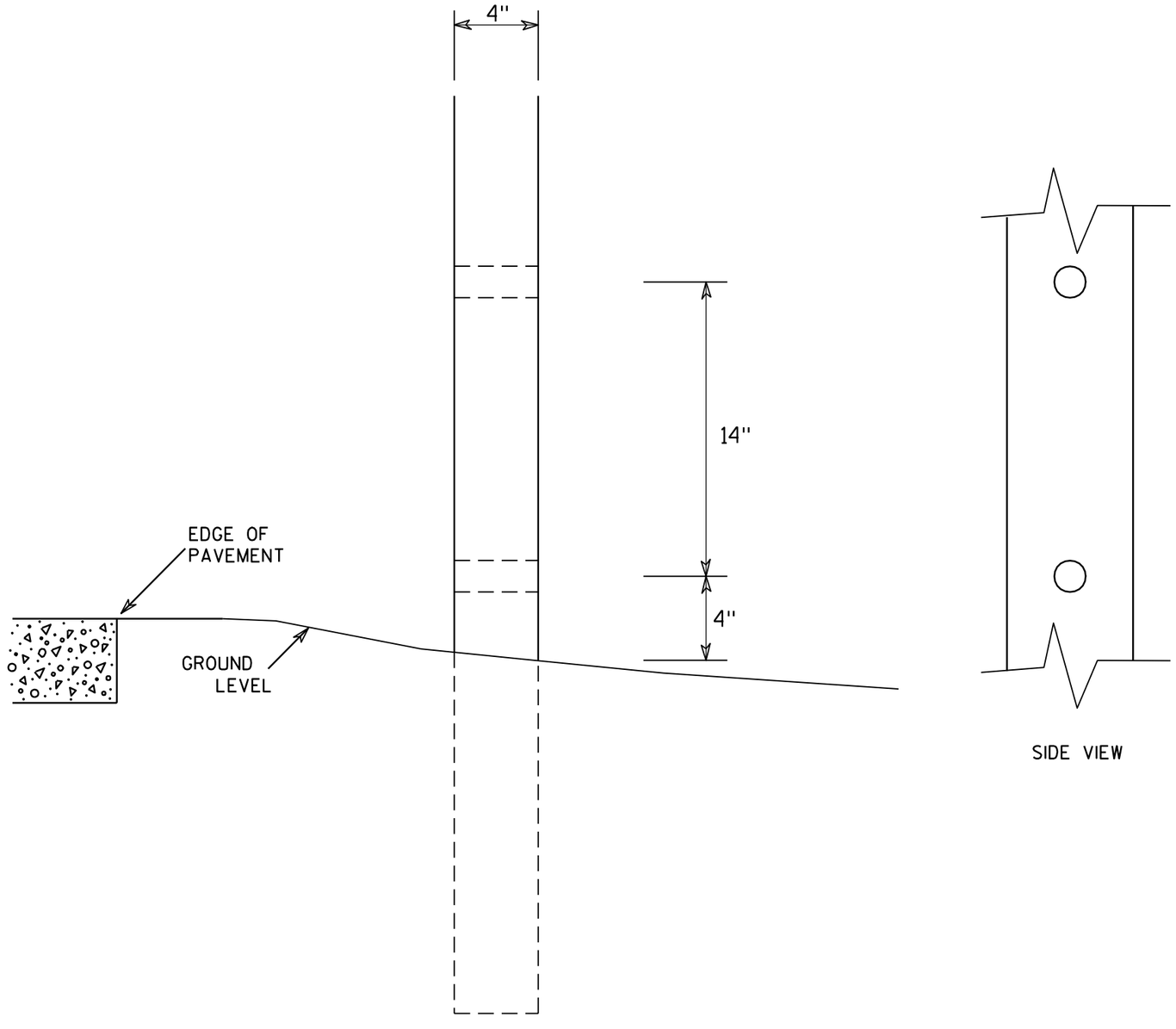

SIDE VIEW

GENERAL NOTES

1. All 4 x 6 Wood Posts shall be modified by having two 1½" diameter holes drilled perpendicular to the roadway centerline.

7

7

4 X 6 WOOD POST MODIFICATIONS

WISCONSIN DEPT OF TRANSPORTATION

APPROVED Chester J Spang for State Traffic Engineer

DATE 3/27/97 PLATE NO. A4-11.2

PROJECT NO:	HWY:	COUNTY:		SHEET NO: 182	E

URBAN AREA

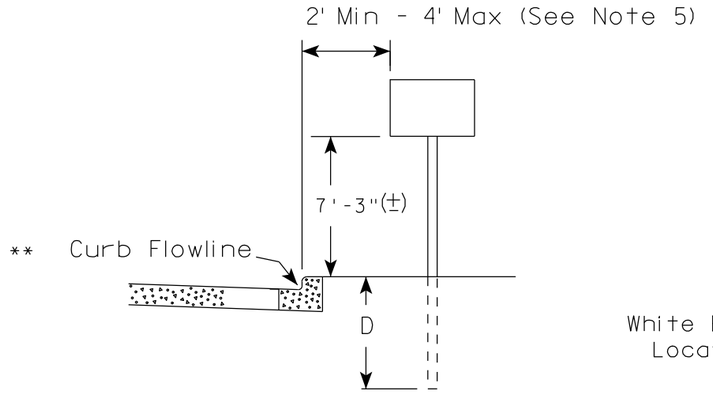

RURAL AREA (See Note 2)

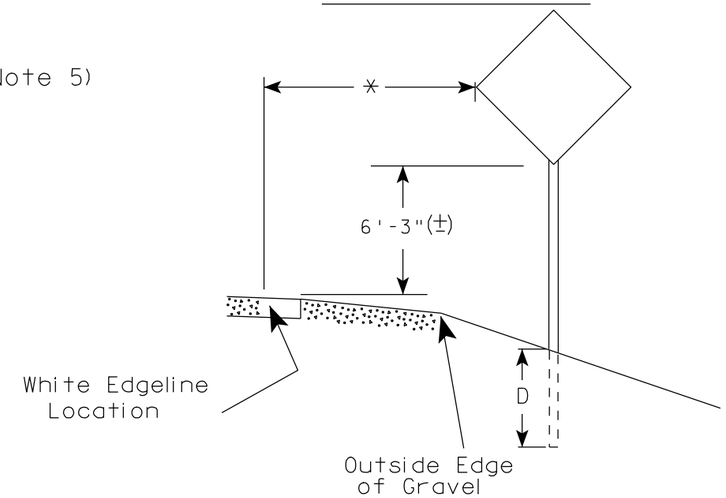

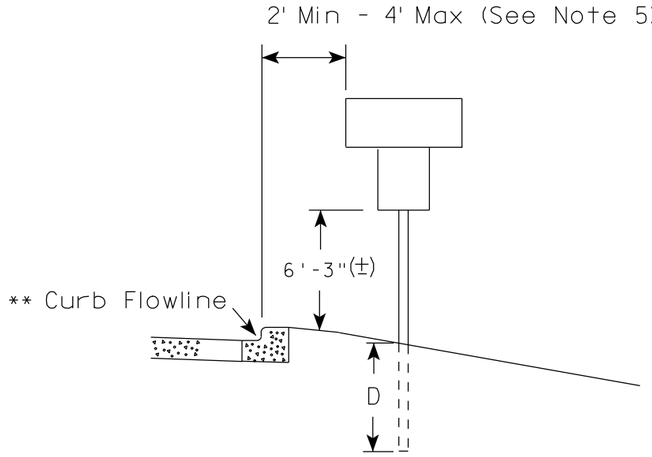

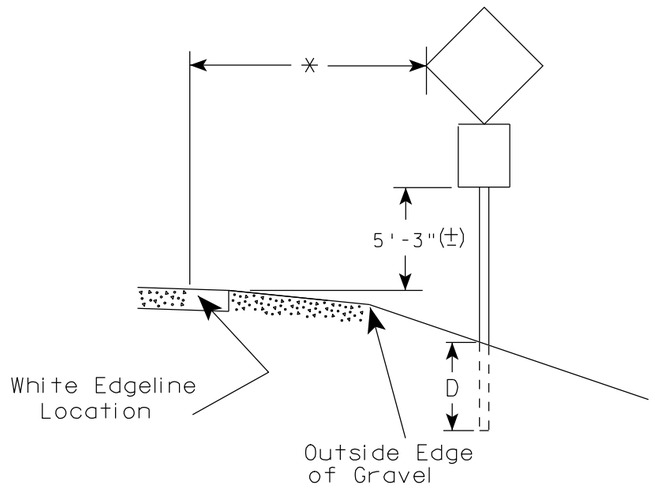

** The existence of curb and gutter does not in itself mandate the vertical clearance illustrated. That height is typically measured where there is sidewalk adjacent to the roadway or parking is permitted. In the absence of sidewalk vertical clearance is measured from the top of the curb. Offset of signs is measured from the flow line.

* 6 feet from edge of a paved shoulder or 12 feet from the edge of pavement (edge line location) or 2 feet from outside edge of gravel, whichever is greater unless directed by project engineer.

GENERAL NOTES

1. Signs wider than 4 feet or larger than 20 sq. ft. shall be mounted on multiple posts. Refer to plate A4-4.
2. If signs are mounted on barrier wall, see A4-10 sign plate.
3. For expressways and freeways, mounting height is 7'- 3" (±) or 6'-3" (±) depending upon existence of a sub-sign.
4. Minimum mounting height for J assemblies (A4-5) is 7'-3" (±) or 6'-3" (±) per urban or rural detail respectively.
5. Minimum mounting height for signs mounted on traffic signal poles is 5'- 3" (±).
6. Offset distance shall be consistent with existing signs or consistent throughout length of project.
7. The (±) tolerance for mounting height is 3 inches.
8. Folding stop signs (R1-1F) shall be mounted at a height of 5'-3" (±) or as directed by the Engineer.
9. The Double Arrow sign (W12-1) shall be mounted at a height of 2'-3" (±). The Chevron sign (W1-8), Roundabout Chevron panel (R6-4B), Clearance Markers (W5-52), Mile Markers (D10 series) & End of Road Markers (W5-56 & W5-56A) shall be mounted at a height of 4'-3" (±).

POST EMBEDMENT DEPTH

Area of Sign Installation (Sq. Ft.)	D (Min)
20 or Less	4'
Greater than 20	5'

TYPICAL INSTALLATION OF PERMANENT TYPE II SIGNS ON SINGLE POSTS

WISCONSIN DEPT OF TRANSPORTATION

APPROVED Matthew R Rauch
for State Traffic Engineer

DATE 9/21/2011 PLATE NO. A4-3.16

PROJECT NO:	HWY:	COUNTY:		SHEET NO: 183	E

URBAN AREA

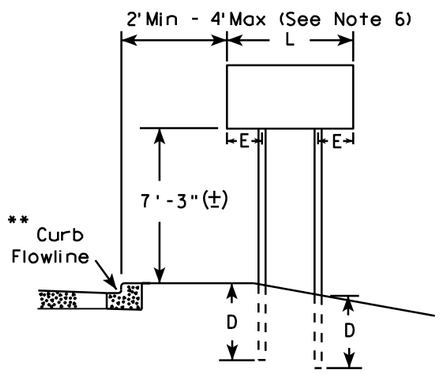

RURAL AREA (See Note 3)

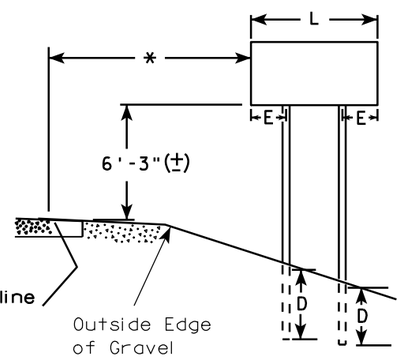

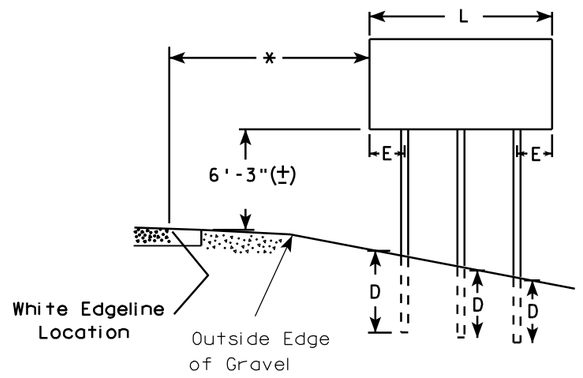

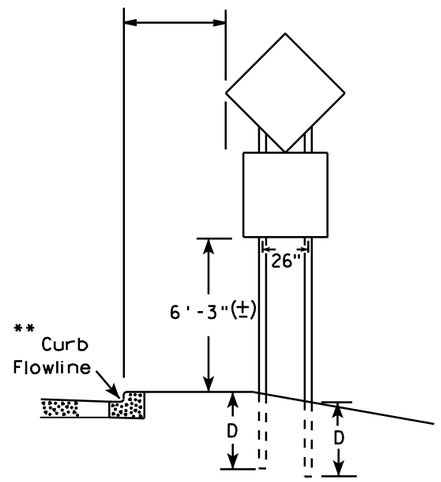

48" DIAMOND WARNING SIGN

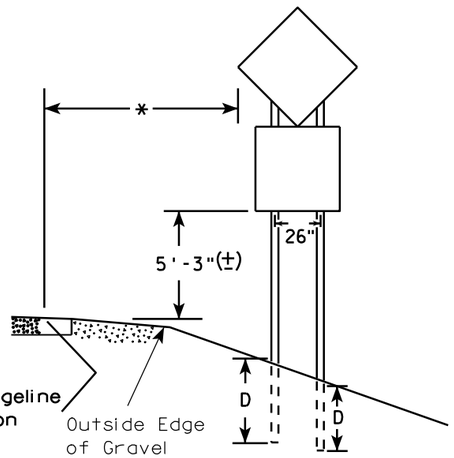

48" DIAMOND WARNING SIGN

***	SIGN SHAPE OTHER THAN DIAMOND (TWO POSTS REQUIRED)	
	L	E
	Greater than 48" Less than 60"	12"
	60" to 120"	L/5

SIGN SHAPE OTHER THAN DIAMOND (THREE POSTS REQUIRED)	
L	E
Greater than 120" less than 168"	12"

SIGN SHAPE OTHER THAN DIAMOND (FOUR POSTS REQUIRED)	
L	E
168" and greater	12"

POST EMBEDMENT DEPTH

Area of Sign Installation (Sq. Ft.)	D (Min)
20 or Less	4'
Greater than 20	5'

GENERAL NOTES

1. For multiple post installations, individual post spacing shall be greater than 3'-6".
2. See tables below for required number of posts.
3. For expressways and freeways, mounting height is 7'-3" (±) or 6'-3" (±) depending upon existence of sub-sign.
4. The (±) tolerance for mounting height is 3 inches.
5. Minimum mounting height for J assemblies (A4-5) is 7'-3" (±) or 6'-3" (±) per urban or rural detail respectively.
6. Offset distance shall be consistent with existing signs or consistent throughout length of project.
7. Folding stop signs (R1-1F) shall be mounted at a height of 5'-3" (±) or as directed by the engineer.
8. The Double Arrow sign (W12-1) shall be mounted at a height of 2'-3" (±). The Chevron sign (W1-8), Roundabout Chevron panel (R6-4B), Clearance Markers (W5-52), Mile Markers (D10 series) & End of Road Markers (W5-56 & W5-56A) shall be mounted at a height of 4"-3" (±).

* 6 feet from edge of a paved shoulder or 12 feet from the edge of pavement (edge line location) or 2 feet from outside edge of gravel, whichever is greater unless directed by project engineer.

** The existence of curb and gutter does not in itself mandate the vertical clearance illustrated. That height is typically measured where there is sidewalk adjacent to the roadway or parking is permitted. In the absence of sidewalk vertical clearance is measured from the top of the curb. Offset of signs is measured from the flow line.

*** See A4-3 sign plate for signs 4' or less in width or 20 S.F. or less in area.

TYPICAL INSTALLATION OF TYPE II SIGNS ON MULTIPLE POSTS

WISCONSIN DEPT OF TRANSPORTATION

APPROVED Matthew R Rauch
for State Traffic Engineer

DATE 9/21/2011 PLATE NO. A4-4.11

PROJECT NO:	HWY:	COUNTY:		SHEET NO: 184	E

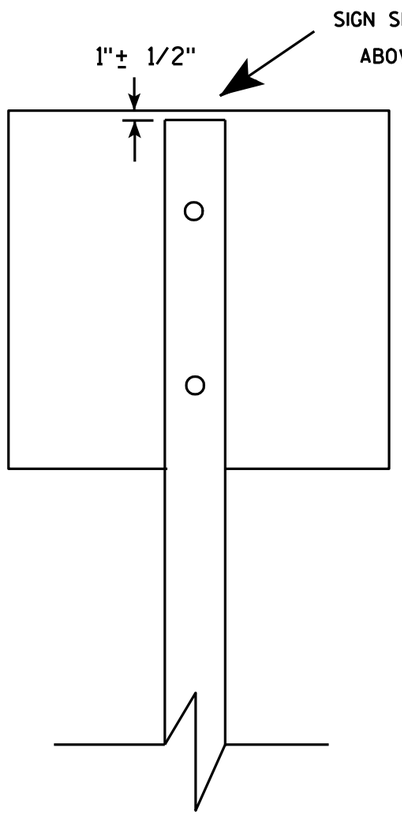

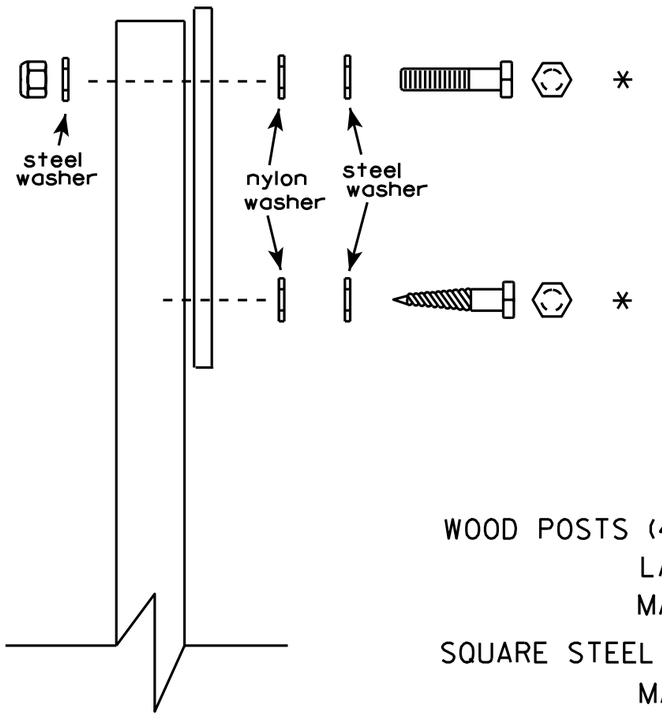

Nuts, bolts and lags used for mounting signs shall have hexagonal heads and shall be either :

a. Hot dip galvanized in accordance with ASTM Designation: A 153, Class D, or SC 3
b. Electro-galvanized in accordance with ASTM Designation : B 633, TYPE III, SC 3.

Threads on bolts and nuts shall be manufactured with sufficient allowance for the cadmium plate or galvanized coating to permit the nuts to run freely on the bolts.

WOOD POSTS (4" x 4" or 4" x 6")
LAG SCREWS - 3/8" X 3"
MACHINE BOLTS - 5/16" X 6-1/2" or 7" Length w/ nuts

SQUARE STEEL POSTS (2" x 2")
MACHINE BOLTS - 3/8" X 3-1/4" Length w/ nuts
RIVETS - 9/32 " (6605-9-6) BULB-TITE, TRI-FOLD, ALUMINUM BODY/MANDREL
O.D. FLANGE .720-.765 INCH, GRIP RANGE .042-.375 INCH

WASHERS (ALL POSTS) -
1-1/4" O.D. X 3/8" I.D. X 1/16" STEEL
1-1/4" O.D. X 3/8" I.D. X .080 NYLON for all Type H signs.

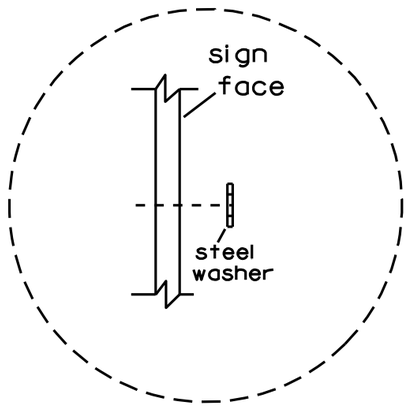

Washer Placement when Sign Has Other Than Type H or Type F Face

* Two different fastening systems are shown for illustration purposes. On any individual sign, either one or the other system shall be used. Actual number of fasteners per sign varies with the sign area, but normally there are two. For a single post installation, all signs greater than 9 sq. ft. require the use of 3 fasteners.

ATTACHMENT OF SIGNS TO POSTS

WISCONSIN DEPT OF TRANSPORTATION

APPROVED Matthew R Rauch
for State Traffic Engineer

DATE 3/23/10 PLATE NO. A4-8.7

7

7

PROJECT NO:

SHEET NO: 185 E

BRACE BANDING

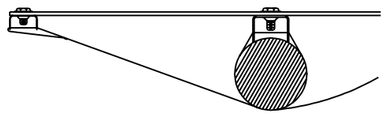

DETAIL C
CADMIUM PLATED STEEL BOLT
THROUGH BLACK BORDER

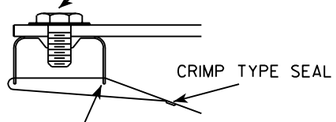

DETAIL C

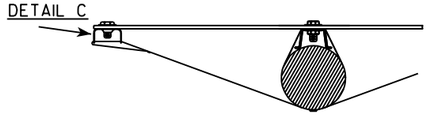

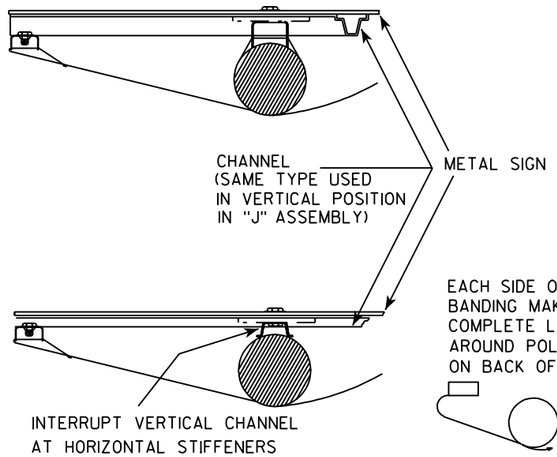

EACH SIDE OF BRACE
BANDING MAKES ONE
COMPLETE LOOP
AROUND POLE-SEAL
ON BACK OF POLE

BRACKET BANDING

SINGLE SIGN

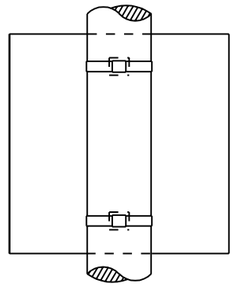

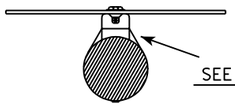

SEE DETAIL A

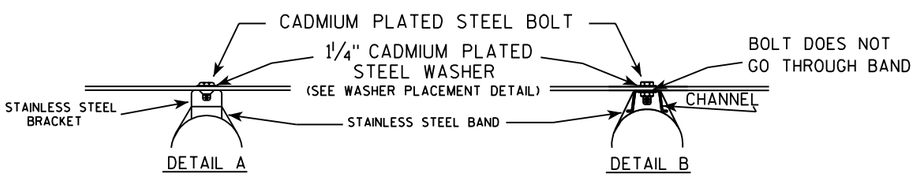

DETAIL A

DETAIL B

"J" ASSEMBLY

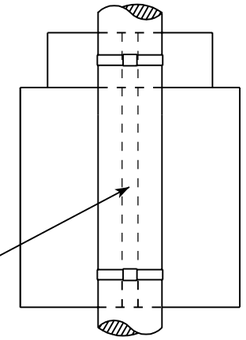

CHANNEL
SEE TYPICAL PANEL
INSTALLATION SHEET

SEE DETAIL B

GENERAL NOTES

1. Signs 4' or greater in width shall have one brace band installed at the center of the sign.
2. Signs 3' or greater in height shall have three bracket bands installed. Signs less than 3' in height shall have two bracket bands installed.
3. Banding and assembly bracket shall be stainless steel. All bands shall be ¾" in width and 0.025" thickness.

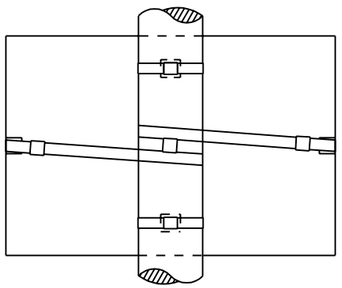

BRACE BANDING

BRACE BANDING SHALL BE TIGHTENED FIRMLY BUT NOT SO TIGHT AS TO APPRECIABLY CURVE FACE OF SIGN.

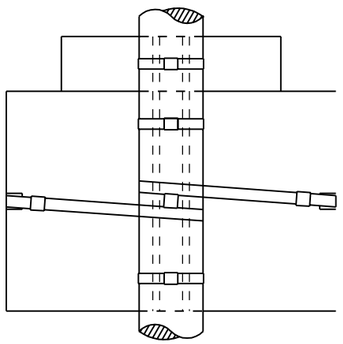

WASHER PLACEMENT

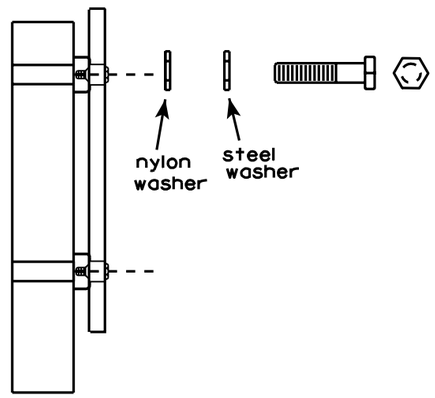

WASHERS (ALL POSTS) -
1-1/4" O.D. X 3/8" I.D. X 1/16" STEEL
1-1/4" O.D. X 3/8" I.D. X .080 NYLON
FOR ALL TYPE H SIGNS

STANDARD SIGN
SIGN BANDING DETAILS

WISCONSIN DEPT OF TRANSPORTATION

APPROVED *Matthew R Rauch*
for State Traffic Engineer

DATE 11/08/05 PLATE NO. A5-9.2

PROJECT NO:	HWY:	COUNTY:		SHEET NO: 186	E

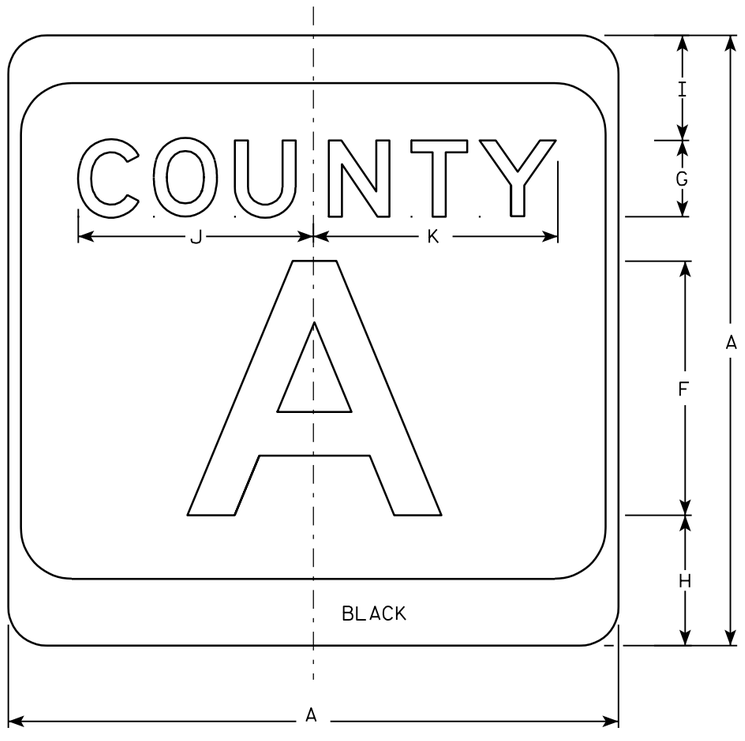

M1-5A

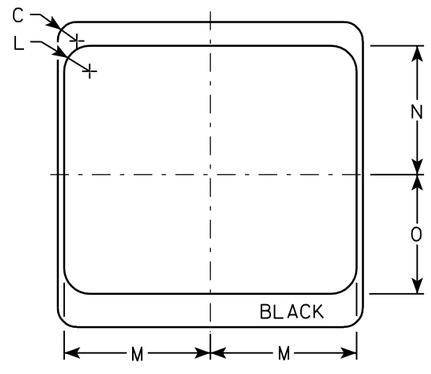

NOTES

1. Sign is Type II - see Note 7 - reference WIS DOT Standard Specification for HIGHWAY and STRUCTURE CONSTRUCTION latest edition.
2. Color:
   Background - White & Black - See Note 7
   Message - Black
3. Message Series - see Note 5
4. Corners may be square or rounded when base material is plywood but borders shall be rounded as shown. When base material is metal, the corners and borders shall be rounded.
5. Message Series E for 1 letter.
   Message Series D for 2 letters unless message is too big then Series C.
   Message Series C for 3 letters unless message is too big then Series B.
6. Substitute appropirate letters & optically adjust spacing to achieve proper balance.
7. Permanent Signs
   Background - Type H Reflective
   Detour or temporary Signs
   Background - Reflective

Metric equivalent for this sign is:

SIZE	
1	
2	600 mm X 600 mm
3	900 mm X 900 mm
4	900 mm X 900 mm
5	900 mm X 900 mm

SIZE	A	B	C	D	E	F	G	H	I	J	K	L	M	N	O	P	Q	R	S	T	U	V	W	X	Y	Z	Area sq. ft.	Area m2
1																												
2	24		1 1/2			10	3	5 1/8	4 1/8	9 1/4	9 5/8	2	11 1/2	10 1/8	9 3/8												4.0	.36
3	36		2 1/4			16	4	7 5/8	5 5/8	12 1/4	12 7/8	3	17 1/8	15 1/4	14												9.0	.81
4	36		2 1/4			16	4	7 5/8	5 5/8	12 1/4	12 7/8	3	17 1/8	15 1/4	14												9.0	.81
5	36		2 1/4			16	4	7 5/8	5 5/8	12 1/4	12 7/8	3	17 1/8	15 1/4	14												9.0	.81

CTH MARKER
M1-5A FOR ASSEMBLIES

WISCONSIN DEPT OF TRANSPORTATION

APPROVED Chester J Spagg for State Traffic Engineer

DATE 3/20/02 PLATE NO. M1-5A.7

PROJECT NO:	HWY:	COUNTY:		SHEET NO: 187	E

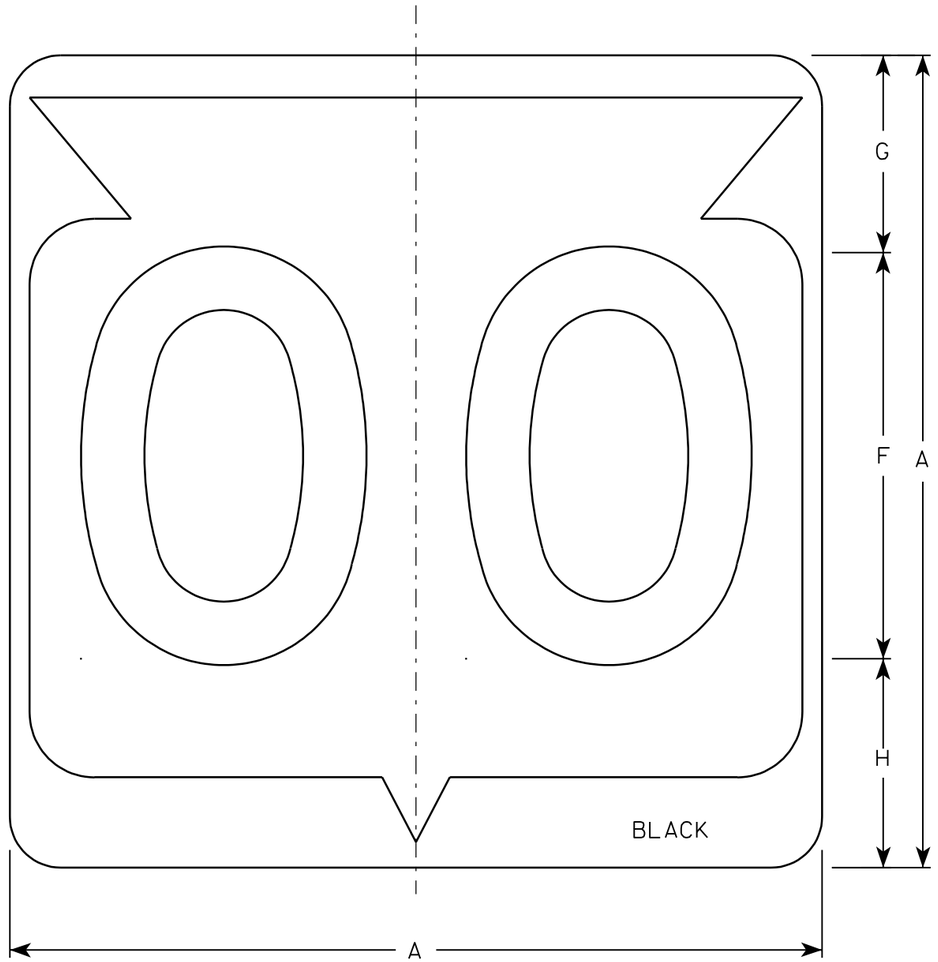

M1-6

NOTES

1. Sign is Type II - See Note 6 - reference WIS DOT Standard Specification for HIGHWAY and STRUCTURE CONSTRUCTION latest edition.
2. Color:
   Background - White & Black - See Note 6
   Message - Black
3. Message Series - See note 5
4. Corners may be square or rounded when base material is plywood but borders shall be rounded as shown. When base material is metal, the corners and borders shall be rounded.
5. Substitute appropriate Series numerals and adjust spacing as per plate A10-1.
6. Permanent Signs
   Background - Type H Reflective
   Detour or temporary Signs
   Background - Reflective

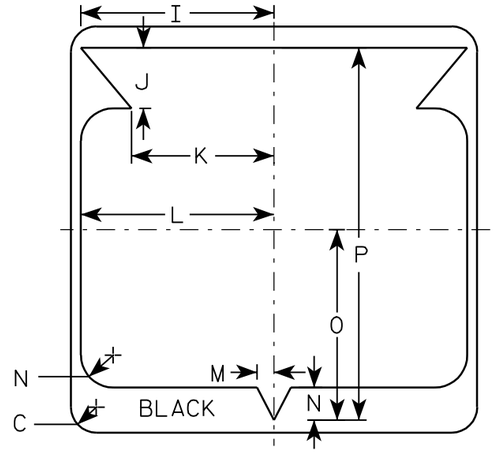

Metric equivalent for this sign is:

SIZE	
1	
2	600 mm X 600 mm
3	900 mm X 900 mm
4	900 mm X 900 mm
5	900 mm X 900 mm

SIZE	A	B	C	D	E	F	G	H	I	J	K	L	M	N	O	P	Q	R	S	T	U	V	W	X	Y	Z	Area sq. ft.	Area m2
1																												
2	24		1 1/2			12	5 1/2	6 1/2	10 1/4	2 1/2	8 7/8	11 1/2	1	1 7/8	11 1/4	21 7/8											4.0	.36
3	36		2 1/4			18	8 3/4	9 1/4	15 3/8	5 3/8	12 5/8	17 1/8	1 1/2	2 7/8	16 7/8	33											9.0	.81
4	36		2 1/4			18	8 3/4	9 1/4	15 3/8	5 3/8	12 5/8	17 1/8	1 1/2	2 7/8	16 7/8	33											9.0	.81
5	36		2 1/4			18	8 3/4	9 1/4	15 3/8	5 3/8	12 5/8	17 1/8	1 1/2	2 7/8	16 7/8	33											9.0	.81

STATE ROUTE MARKER
M1-6 FOR ASSEMBLIES

WISCONSIN DEPT OF TRANSPORTATION

APPROVED Chester J Spang for State Traffic Engineer

DATE 3/20/02 PLATE NO. M1-6.9

PROJECT NO:	HWY:	COUNTY:		SHEET NO: 188	E

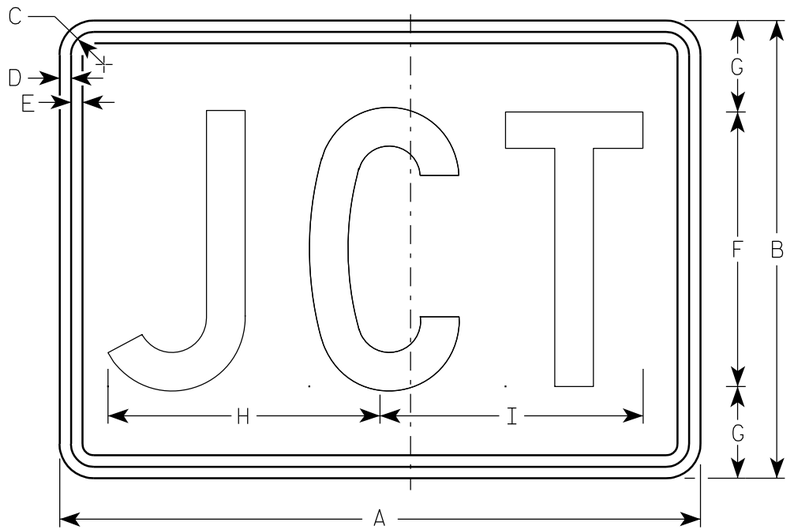

M2-1
MK2-1
MM2-1
MR2-1

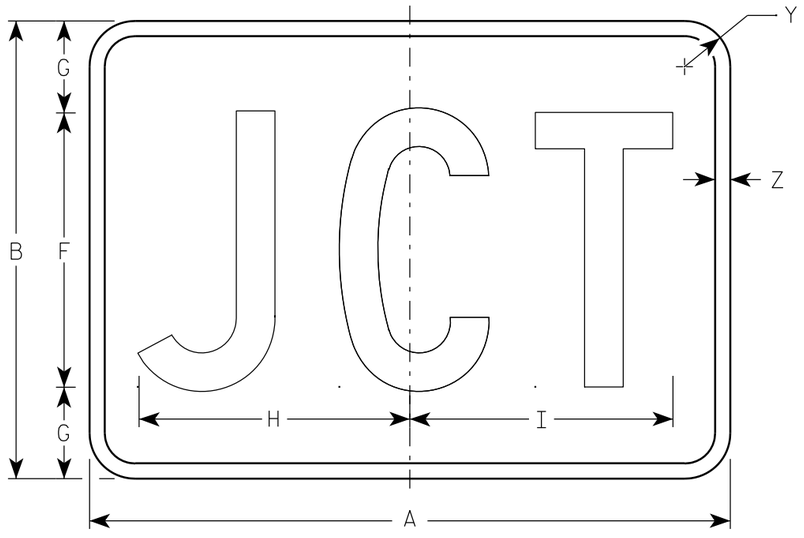

MB2-1
MG2-1
MN2-1

NOTES

1. Sign is Type II - See Note 5 - reference WIS DOT Standard Specification for HIGHWAY and STRUCTURE CONSTRUCTION latest edition.
2. Color:
   Background - See note 5
   Message - See note 5
3. Message Series - C
4. Corners may be square or rounded when base material is plywood but borders shall be rounded as shown. When base material is metal, the corners and borders shall be rounded.
5. M2-1 Background - White - Type H Reflective
   (Detour or temporary Signs - Reflective)
   Message - Black
   MB2-1 Background - Blue
   Message - White - Type H Reflective
   (Detour or temporary Signs - Reflective)
   MG2-1 Background - Green
   Message - White - Type H Reflective
   MK2-1 Background - Green
   Message - White - Type H Reflective
   MM2-1 Background - White - Type H Reflective
   Message - Green
   MN2-1 Background - Brown
   Message - White - Type H Reflective
   MR2-1 Background - Brown
   Message - Yellow - Type H Reflective

Metric equivalent for this sign is:

SIZE	
1	
2	525 mm X 375 mm
3	750 mm X 525 mm
4	750 mm X 525 mm
5	750 mm X 525 mm

SIZE	A	B	C	D	E	F	G	H	I	J	K	L	M	N	O	P	Q	R	S	T	U	V	W	X	Y	Z	Area sq. ft.	Area m2
1																												
2	21	15	1 1/8	3/8	3/8	9	3	8 7/8	8 5/8																1 1/2	1/2	2.20	0.20
3	30	21	1 1/8	3/8	3/8	13	4	12 7/8	12 3/8																1 1/2	1/2	4.40	0.20
4	30	21	1 1/8	3/8	3/8	13	4	12 7/8	12 3/8																1 1/2	1/2	4.40	0.20
5	30	21	1 1/8	3/8	3/8	13	4	12 7/8	12 3/8																1 1/2	1/2	4.40	0.20

STANDARD SIGN
M2-1

WISCONSIN DEPT OF TRANSPORTATION

APPROVED Matthew R Rauch
for State Traffic Engineer

DATE 3/16/10 PLATE NO. M2-1.10

PROJECT NO:	HWY:	COUNTY:		SHEET NO: 189	E

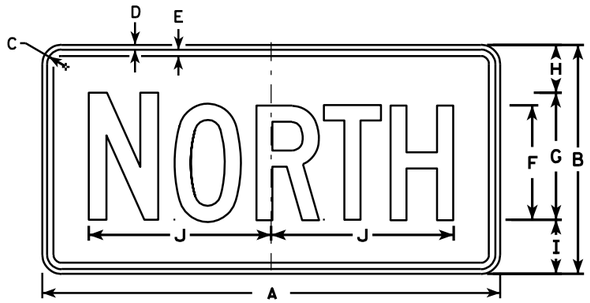

M3-1
MK3-1
MO3-1

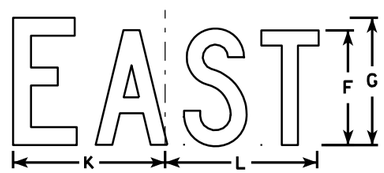

M3-2
MK3-2
MO3-2

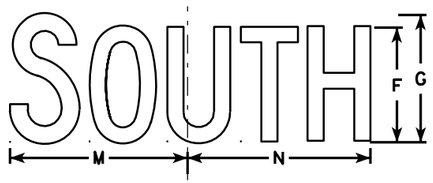

M3-3
MK3-3
MO3-3

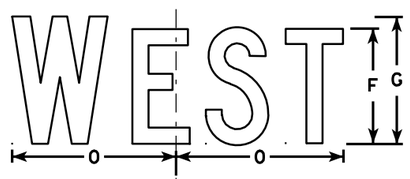

M3-4
MK3-4
MO3-4

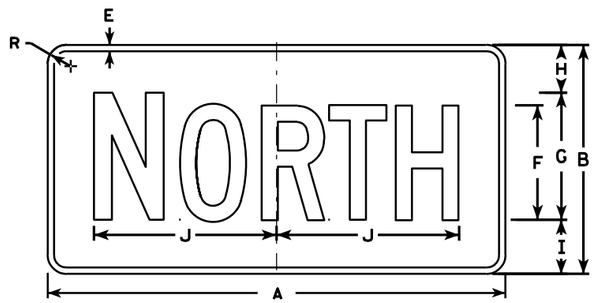

MB3-1
MG3-1
MM3-1
MN3-1

MB3-2
MG3-2
MM3-2
MN3-2

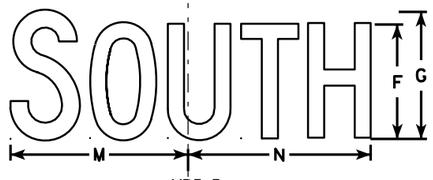

MB3-3
MG3-3
MM3-3
MN3-3

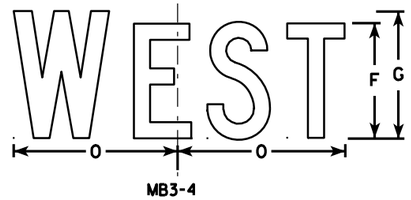

MB3-4
MG3-4
MM3-4
MN3-4

NOTES

1. All Signs Type II - See Note 5 - reference WIS DOT Standard Specification for HIGHWAY and STRUCTURE CONSTRUCTION latest edition.
2. Color:
   Background - See note 5
   Message - See note 5
3. Message Series - C
4. Corners may be square or rounded when base material is plywood but borders shall be rounded as shown. When base material is metal, the corners and borders shall be rounded.
5. M3-1 thru M3-4 Background - White - Type H Reflective
   (Detour or temporary signs - Reflective)
   Message - Black
   MB3-1 thru MB3-4 Background - Blue
   Message - White - Type H Reflective
   (Detour or temporary signs - Reflective)
   MG3-1 thru MG3-4 Background - Green
   Message - White - Type H Reflective
   MK3-1 thru MK3-4 Background - Green
   Message - White - Type H Reflective
   MM3-1 thru MM3-4 Background - White - Type H Reflective
   Message - Green
   MN3-1 thru MN3-4 Background - Brown
   Message - White - Type H Reflective
   M03-1 thru M03-4 Background - Orange - Reflective
   Message - Black
6. Note the first letter of each direction is larger than the remainder of the message.

SIZE	A	B	C	D	E	F	G	H	I	J	K	L	M	N	O	P	Q	R	S	T	U	V	W	X	Y	Z	Area sq. ft.
1																											
2	24	12	1 1/8	3/8	3/8	6	7	2 1/4	2 3/4	10 1/4	7 7/8	8 3/8	10 1/4	9 3/4	8 3/4			1 1/2									2.00
3	36	18	1 1/8	3/8	1/2	9	10	3 3/4	4 1/4	14 3/8	12	12 1/8	14	14 1/8	13			1 1/2									4.5
4	36	18	1 1/8	3/8	1/2	9	10	3 3/4	4 1/4	14 3/8	12	12 1/8	14	14 1/8	13			1 1/2									4.5
5	36	18	1 1/8	3/8	1/2	9	10	3 3/4	4 1/4	14 3/8	12	12 1/8	14	14 1/8	13			1 1/2									4.5

STANDARD SIGNS
M3-1 thur M3-4
SERIES

WISCONSIN DEPT OF TRANSPORTATION

APPROVED Matthew R Rauch for State Traffic Engineer

DATE 11/10/10 PLATE NO. M3-1.12

PROJECT NO:	HWY:	COUNTY:		SHEET NO: 190	E

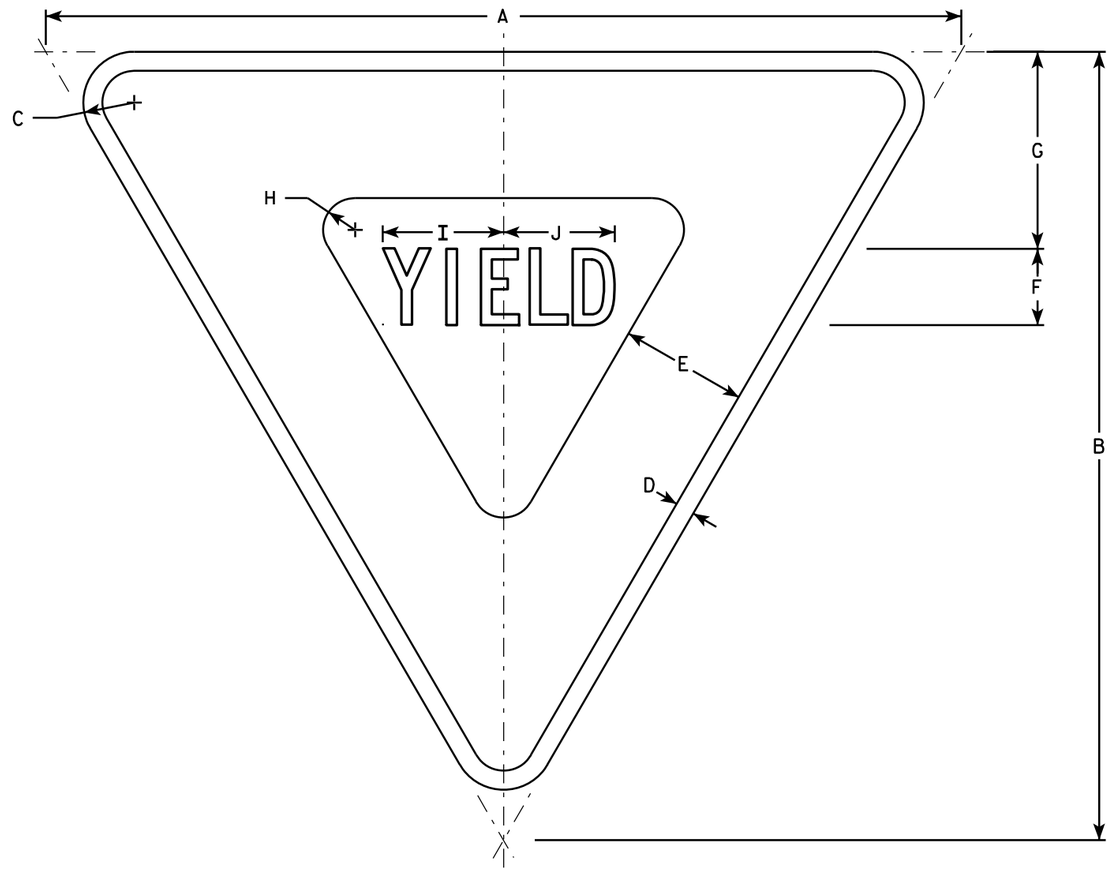

R1-2

NOTES

1. Sign is Type II - Type H Reflective - reference WIS DOT Standard Specification for HIGHWAY and STRUCTURE CONSTRUCTION latest edition.
2. Color:
   Background - White
   Message - See note 5
3. Message Series - C
4. Corners may be square or rounded when base material is plywood but borders shall be rounded as shown. When base material is metal, the corners and borders shall be rounded.
5. The border strip and word message are reflectorized red.

SIZE	A	B	C	D	E	F	G	H	I	J	K	L	M	N	O	P	Q	R	S	T	U	V	W	X	Y	Z	Area sq. ft.
1	30	26	1 1/2	5/8	4	2 1/2	6 3/8	7/8	4	3 5/8																	2.71
2S	36	31	2	3/4	5	3	7 3/4	1 1/4	4 3/4	4 3/8																	3.88
2M	48	42	3	1	6	4	9 3/4	2	6 1/4	5 7/8																	7.00
3	48	42	3	1	6	4	9 3/4	2	6 1/4	5 7/8																	7.00
4	48	42	3	1	6	4	9 3/4	2	6 1/4	5 7/8																	7.00
5	60	52	3	1 1/2	8	5	13	2 1/2	7 7/8	7 1/4																	10.83
6	24	21	1 1/2	3/8	3	2	4 3/4	7/8	3 1/4	3																	1.75
7	18	15 1/2	1	3/8	2 1/2	1 1/2	3 7/8	5/8	2 3/8	2 1/4																	0.97

STANDARD SIGN
R1-2

WISCONSIN DEPT OF TRANSPORTATION

APPROVED Matthew R Rauch
for State Traffic Engineer

DATE 11/02/10 PLATE NO. R1-2.11

PROJECT NO: | HWY: | COUNTY: | SHEET NO: 191 | E

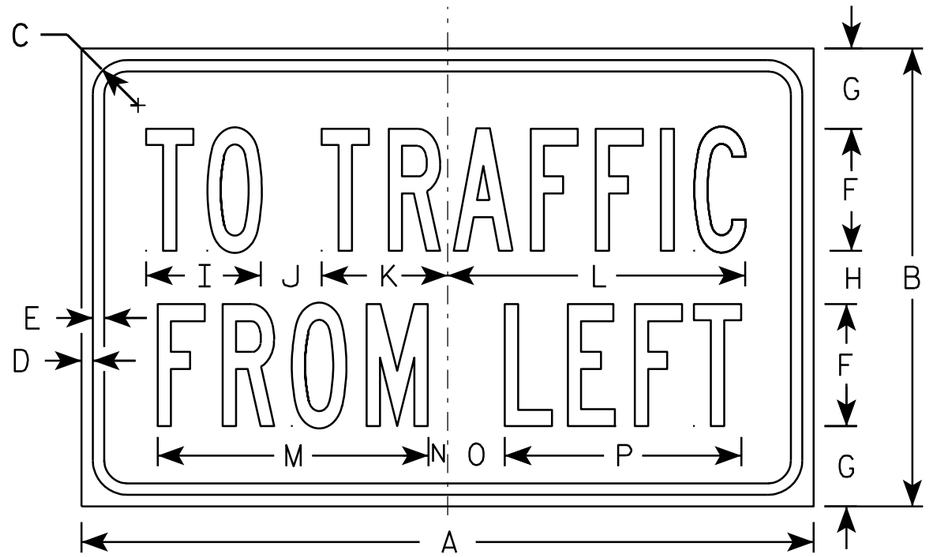

R1-54

NOTES

1. Sign is Type II - Type H Reflective - reference WIS DOT Standard Specification for HIGHWAY and STRUCTURE CONSTRUCTION latest edition.
2. Color:
   Background - White
   Message - Black
3. Message Series - B

SIZE	A	B	C	D	E	F	G	H	I	J	K	L	M	N	O	P	Q	R	S	T	U	V	W	X	Y	Z	Area sq. ft.
1																											
2S	24	15	1 1/8	3/8	3/8	4	2 5/8	1 3/4	3 3/4	2	4 1/8	9 3/4	8 7/8	5/8	1 7/8	7 3/4											2.5
2M	24	15	1 1/8	3/8	3/8	4	2 5/8	1 3/4	3 3/4	2	4 1/8	9 3/4	8 7/8	5/8	1 7/8	7 3/4											2.5
3																											
4																											
5																											

STANDARD SIGN
R1-54

WISCONSIN DEPT OF TRANSPORTATION

APPROVED Matthew R Rauch
for State Traffic Engineer

DATE 12/03/10 PLATE NO. R1-54.2

PROJECT NO:	HWY:	COUNTY:		SHEET NO: 192	E

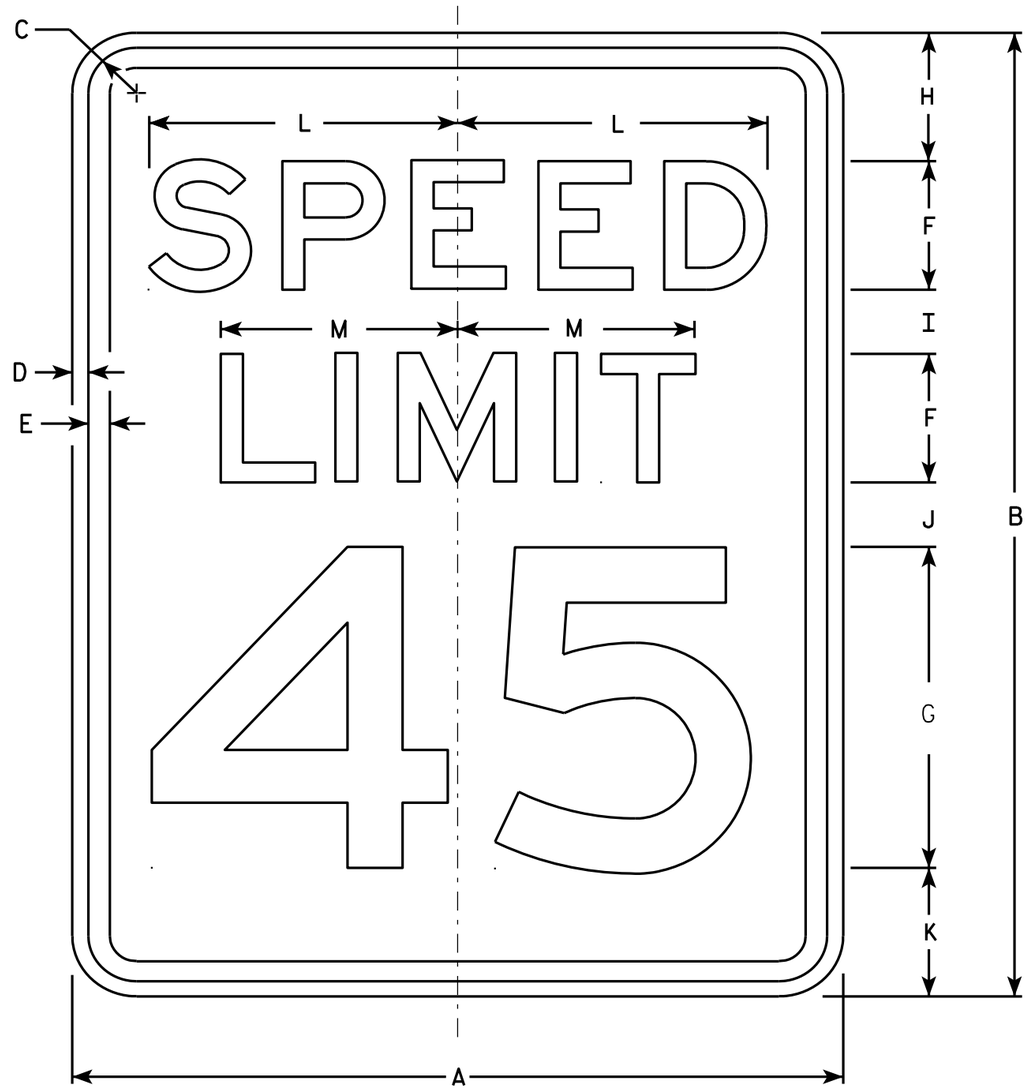

R2-1

NOTES

1. Sign is Type II - Type H Reflective - reference WIS DOT Standard Specification for HIGHWAY and STRUCTURE CONSTRUCTION latest edition.
2. Color:
   Background - White
   Message - Black
3. Message Series - E
4. Corners may be square or rounded when base material is plywood but borders shall be rounded as shown. When base material is metal, the corners and borders shall be rounded.
5. Substitute appropriate numerals and optically adjust spacing to achieve proper balance.

SIZE	A	B	C	D	E	F	G	H	I	J	K	L	M	N	O	P	Q	R	S	T	U	V	W	X	Y	Z	Area sq. ft.
1	18	24	1 1/8	3/8	1/2	3	8	3	2	2	3	7 1/4	5 1/2														3.0
2S	24	30	1 1/8	3/8	1/2	4	10	3	2 1/4	3 3/8	3 3/8	9 5/8	7 3/8														5.0
2M	30	36	1 3/8	1/2	5/8	5	12	5	2 1/2	2 1/2	4	12	9 1/4														7.5
3	36	48	1 3/8	1/2	5/8	6	14	6	5	5	6	14 3/8	11														12.0
4	36	48	1 3/8	1/2	5/8	6	14	6	5	5	6	14 3/8	11														12.0
5	48	60	2 1/4	3/4	1	8	20	6	4 1/2	6 3/4	6 3/4	19 1/4	14 5/8														20.0

STANDARD SIGN
R2-1

WISCONSIN DEPT OF TRANSPORTATION

APPROVED Matthew R Rauch
for State Traffic Engineer

DATE 5/26/10 PLATE NO. R2-1.13

PROJECT NO: | HWY: | COUNTY: | SHEET NO: 193 | E

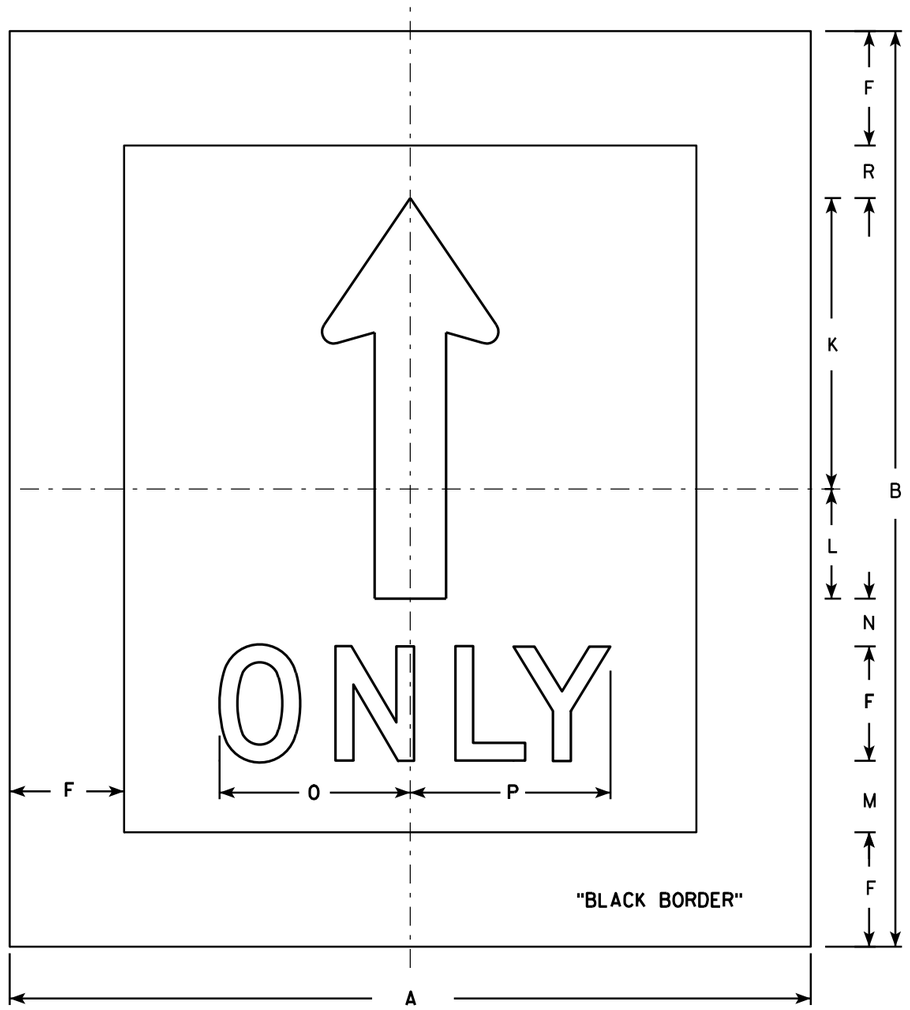

R3-5A

NOTES

1. Sign is Type II - Type H Reflective - reference WIS DOT Standard Specification for HIGHWAY and STRUCTURE CONSTRUCTION latest edition.
2. Color:
   Background - White
   Message - Black
3. Message Series - D
4. Corners may be square or rounded when base material is plywood. When base material is metal, the corners shall be rounded.
5. The 6" border is non-reflective black.

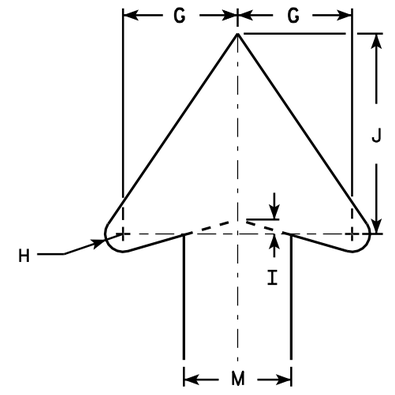

ARROW DETAIL

SIZE	A	B	C	D	E	F	G	H	I	J	K	L	M	N	O	P	Q	R	S	T	U	V	W	X	Y	Z	Area sq. ft.
1																											
2S	42	48				6	4	5/8	1/2	7	15 1/4	5 3/4	3 3/4	2 1/2	10	10 1/2		2 3/4									1.26
2M	42	48				6	4	5/8	1/2	7	15 1/4	5 3/4	3 3/4	2 1/2	10	10 1/2		2 3/4									1.26
3																											
4																											
5																											

STANDARD SIGN
R3-5A

WISCONSIN DEPT OF TRANSPORTATION

APPROVED Matthew R Rauch
for State Traffic Engineer

DATE 2/24/11 PLATE NO. R3-5A.5

PROJECT NO:	HWY:	COUNTY:		SHEET NO: 194	E

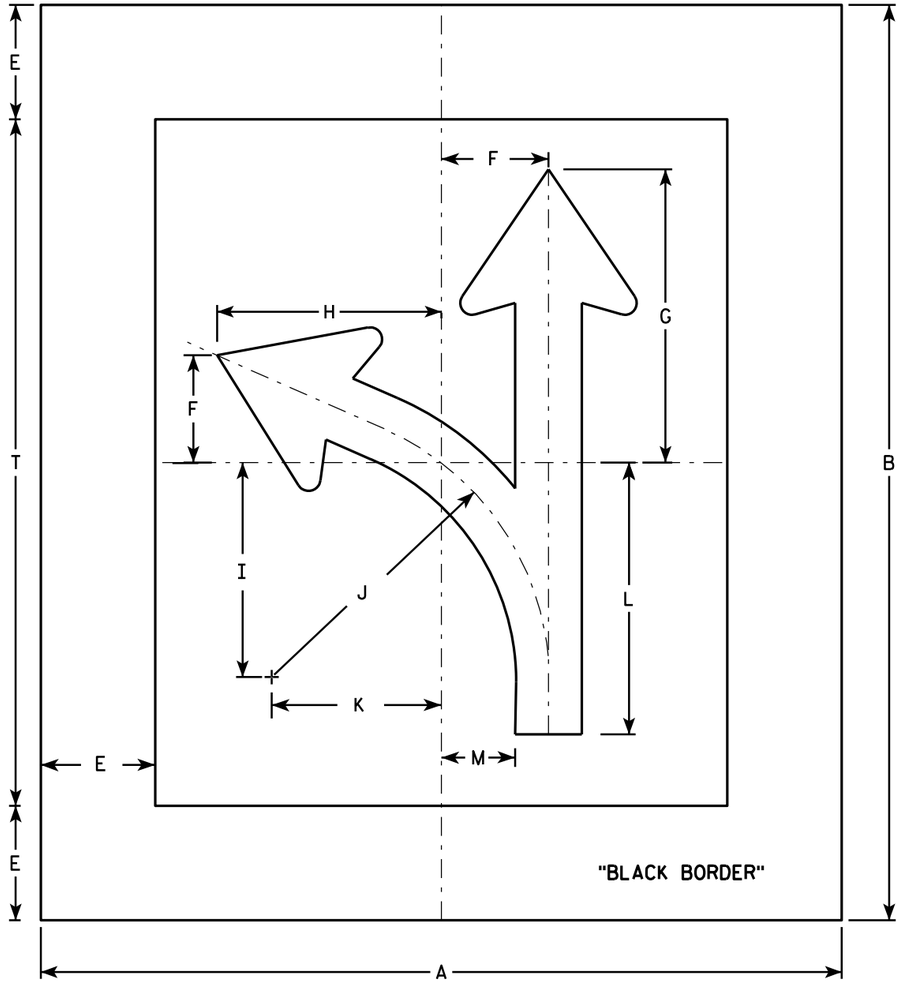

R3-6L

NOTES

1. Sign is Type II - Type H Reflective - reference WIS DOT Standard Specification for HIGHWAY and STRUCTURE CONSTRUCTION latest edition.
2. Color:
   Background - White
   Message - Black
3. Corners may be square or rounded when base material is plywood. When base material is metal, the corners shall be rounded.
4. R3-6R is the same as R3-6L except curved portion of arrow points right.
5. The 6" border is non-reflective black.

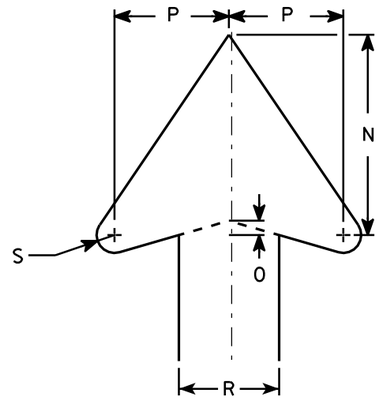

ARROW DETAIL

SIZE	A	B	C	D	E	F	G	H	I	J	K	L	M	N	O	P	Q	R	S	T	U	V	W	X	Y	Z	Area sq. ft.
1																											
2S	42	48			6	5 5/8	15 3/8	11 3/4	11 1/4	14 1/2	8 7/8	14 1/4	3 7/8	7	1/2	4		3 1/2	5/8	36							14.0
2M	42	48			6	5 5/8	15 3/8	11 3/4	11 1/4	14 1/2	8 7/8	14 1/4	3 7/8	7	1/2	4		3 1/2	5/8	36							14.0
3																											
4																											
5																											

STANDARD SIGN
R3-6

WISCONSIN DEPT OF TRANSPORTATION

APPROVED Matthew R Rauch
for State Traffic Engineer

DATE 3/17/2011 PLATE NO. R3-6.5

PROJECT NO: | HWY: | COUNTY: | SHEET NO: 195 | E

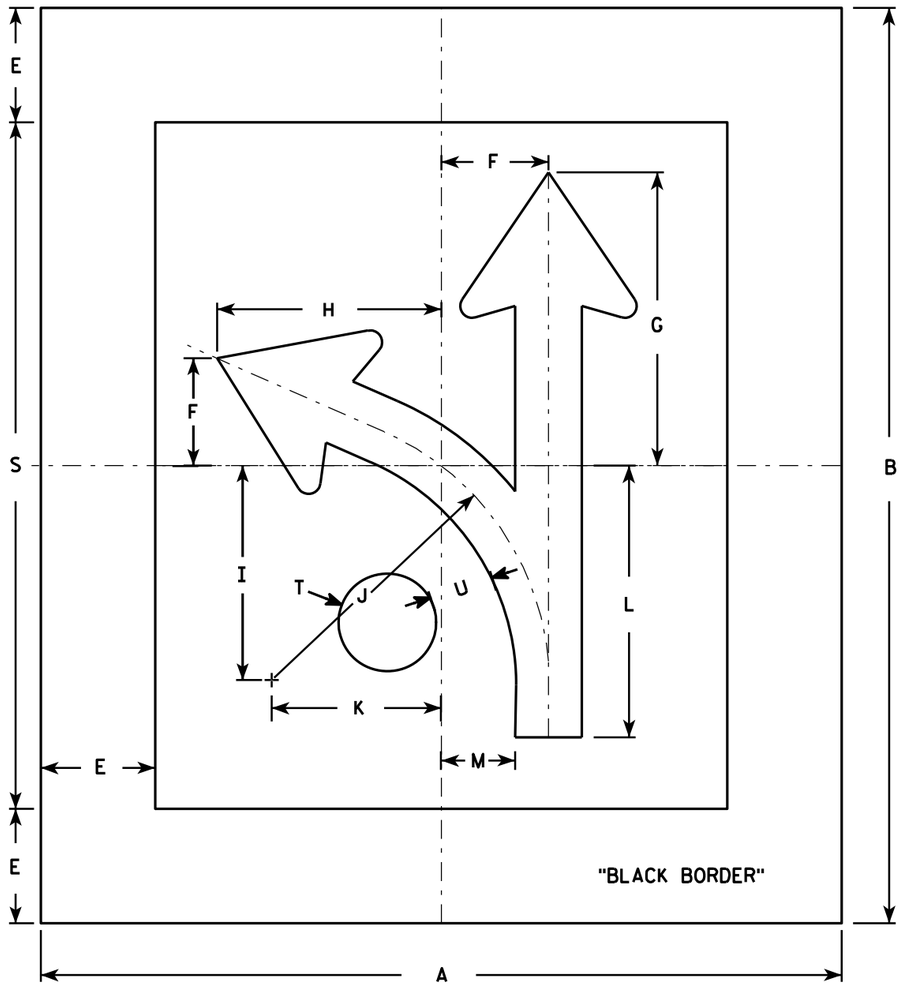

R3-6XL

NOTES

1. Sign is Type II - Type H Reflective - reference WIS DOT Standard Specification for HIGHWAY and STRUCTURE CONSTRUCTION latest edition.
2. Color:
   Background - White
   Message - Black
3. Corners may be square or rounded when base material is plywood. When base material is metal, the corners shall be rounded.
4. The 6" border is non-reflective black.

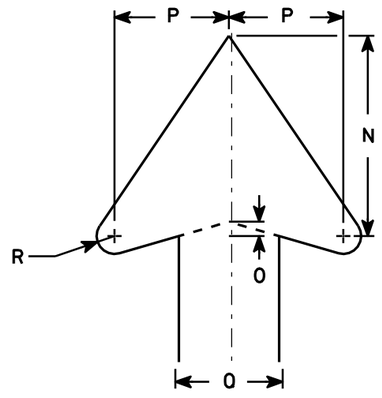

ARROW DETAIL

SIZE	A	B	C	D	E	F	G	H	I	J	K	L	M	N	O	P	Q	R	S	T	U	V	W	X	Y	Z	Area sq. ft.
1																											
2S	42	48			6	5 5/8	15 3/8	11 3/4	11 1/4	14 1/2	8 7/8	14 1/4	3 7/8	7	1/2	4	3 1/2	5/8	36	5	3 1/2						14.0
2M	42	48			6	5 5/8	15 3/8	11 3/4	11 1/4	14 1/2	8 7/8	14 1/4	3 7/8	7	1/2	4	3 1/2	5/8	36	5	3 1/2						14.0
3																											
4																											
5																											

STANDARD SIGN
R3-6XL

WISCONSIN DEPT OF TRANSPORTATION

APPROVED Matthew R Rauch
for State Traffic Engineer

DATE 3/18/2011 PLATE NO. R3-6XL.2

PROJECT NO:	HWY:	COUNTY:		SHEET NO: 196	E

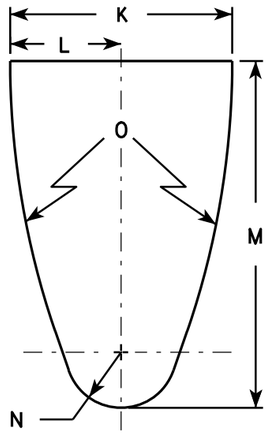

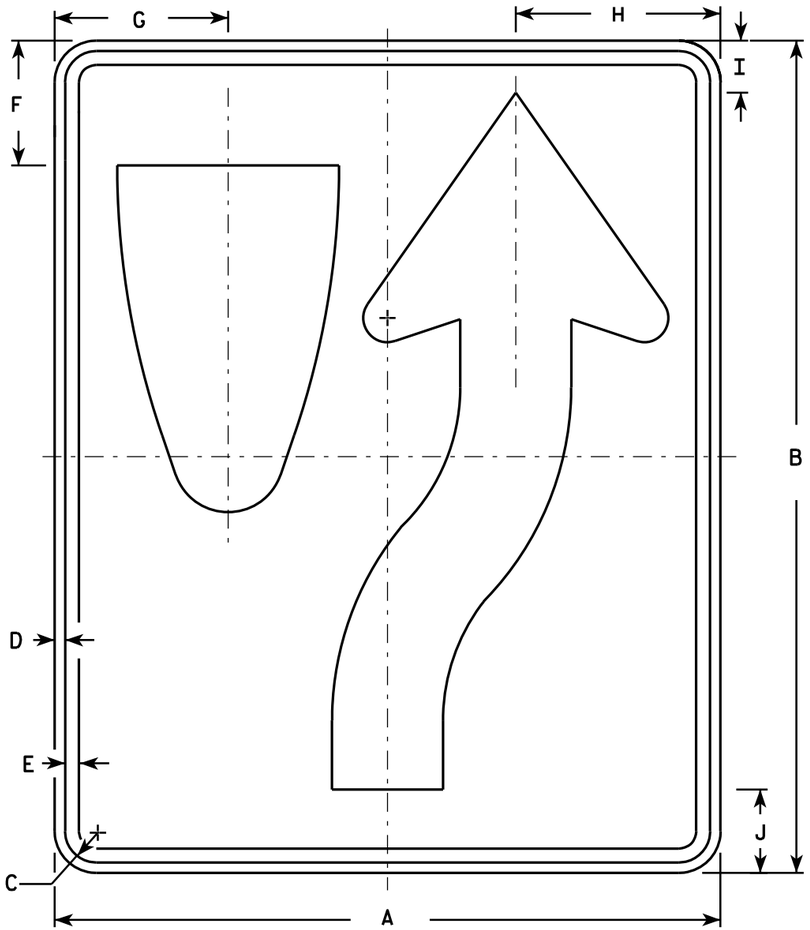

R4-7

NOTES

1. Sign is Type II - Type H Reflective - reference WIS DOT Standard Specification for HIGHWAY and STRUCTURE CONSTRUCTION latest edition. material is plywood but borders shall be rounded
2. Color:
   Background - White
   Message - Black
3. Corners may be square or rounded when base as shown. When base material is metal, the corners and borders shall be rounded.
4. R4-8 is the same as R4-7 except Legend is reversed.

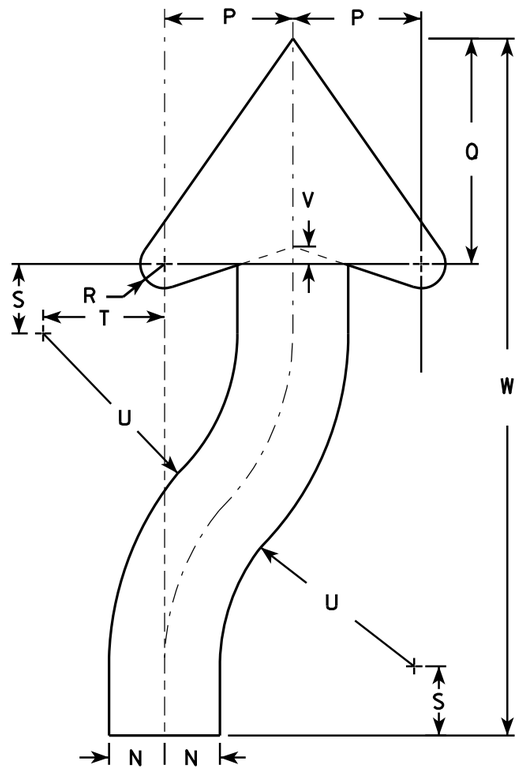

ARROW DETAIL

SIZE	A	B	C	D	E	F	G	H	I	J	K	L	M	N	O	P	Q	R	S	T	U	V	W	X	Y	Z	Area sq. ft.
1	18	24	1 1/8	3/8	1/2	3 3/8	4 3/4	5 1/2	1 3/8	2 1/4	6	3	9 3/8	1 1/2	22 1/2	3 1/2	6 1/8	5/8	1 7/8	3 1/4	6 3/4	1/2	20 3/8				3.0
2S	24	30	1 1/8	3/8	1/2	4 1/2	6 1/4	7 3/8	1 7/8	3	8	4	12 1/2	2	30	4 5/8	8 1/8	7/8	2 1/2	4 3/8	9	5/8	25 1/8				5.0
2M	24	30	1 1/8	3/8	1/2	4 1/2	6 1/4	7 3/8	1 7/8	3	8	4	12 1/2	2	30	4 5/8	8 1/8	7/8	2 1/2	4 3/8	9	5/8	25 1/8				5.0
3	36	48	1 3/4	1/2	5/8	6 3/4	9 3/8	11 1/8	2 7/8	4 1/2	12	6	18 3/4	3	45	6 7/8	12 1/4	1 1/4	3 3/4	6 5/8	13 1/2	1	40 3/4				12.0
4	36	48	1 3/4	1/2	5/8	6 3/4	9 3/8	11 1/8	2 7/8	4 1/2	12	6	18 3/4	3	45	6 7/8	12 1/4	1 1/4	3 3/4	6 5/8	13 1/2	1	40 3/4				12.0
5	48	60	2 1/4	3/4	1	9	12 1/2	14 3/4	3 3/4	6	16	8	25	4	60	9 1/4	16 1/4	1 5/8	5	8 3/4	18	1 1/4	50 1/4				20.0

STANDARD SIGN
R4-7 & R4-8

WISCONSIN DEPT OF TRANSPORTATION

APPROVED Matthew R Rauch for State Traffic Engineer

DATE 3/25/2011 PLATE NO. R4-7.8

PROJECT NO:	HWY:	COUNTY:		SHEET NO: 197	E

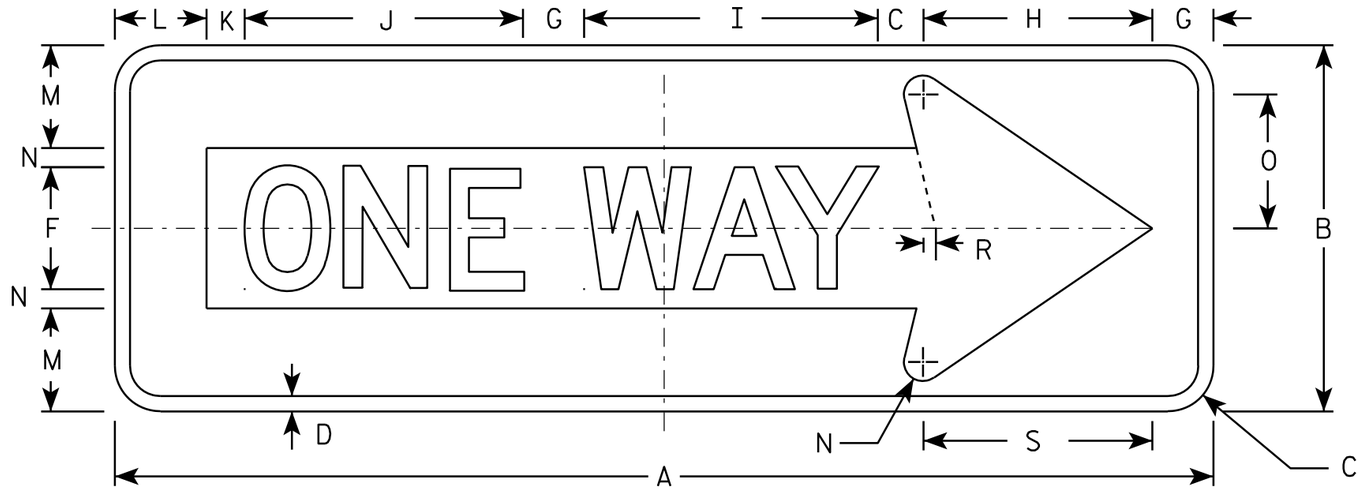

R6-1R

NOTES

1. Sign is Type II - Type H Reflective - reference WIS DOT Standard Specification for HIGHWAY and STRUCTURE CONSTRUCTION latest edition.
2. Color:
   Background - BLACK
   Message - BLACK LEGEND & WHITE ARROW & BORDER
3. Message Series - D
4. Corners may be square or rounded when base material is plywood but borders shall be rounded as shown. When base material is metal, the corners and borders shall be rounded.

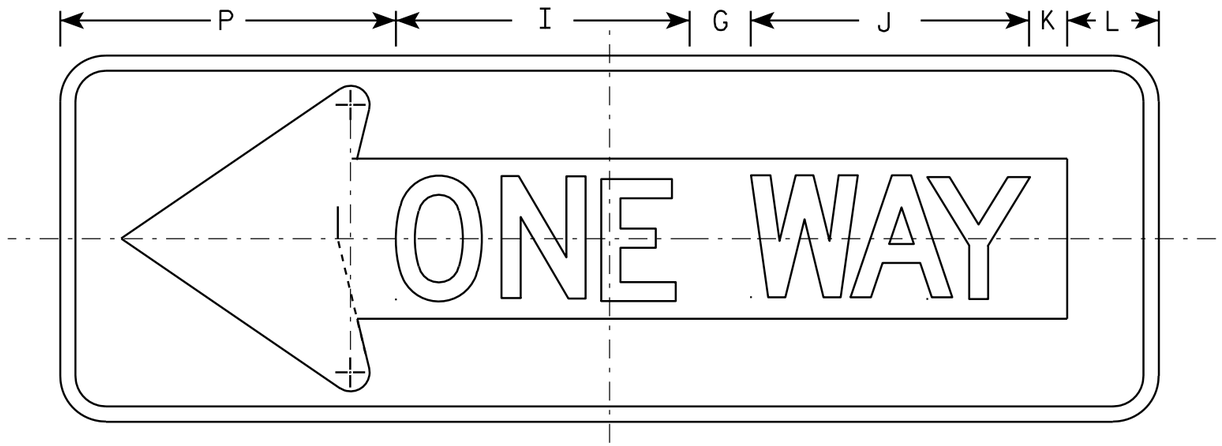

R6-1L

SIZE	A	B	C	D	E	F	G	H	I	J	K	L	M	N	O	P	Q	R	S	T	U	V	W	X	Y	Z	Area sq. ft.
1																											
2S	36	12	1 ½	½		4	2	7 ½	9 ⅝	9 ⅛	1 ¼	3	3 ⅜	⅝	4 ⅜	11		⅜	7 ½								3.0
2M	54	18	2 ¼	¾		6	3	11 ¼	14 ½	13 ⅝	1 ⅞	4 ½	5	1	6 ½	16 ½		⅝	11 ¼								6.75
3	54	18	2 ¼	¾		6	3	11 ¼	14 ½	13 ⅝	1 ⅞	4 ½	5	1	6 ½	16 ½		⅝	11 ¼								6.75
4	54	18	2 ¼	¾		6	3	11 ¼	14 ½	13 ⅝	1 ⅞	4 ½	5	1	6 ½	16 ½		⅝	11 ¼								6.75
5																											

STANDARD SIGN
R6-1 L & R

WISCONSIN DEPT OF TRANSPORTATION

APPROVED Matthew R Rauch
for State Traffic Engineer

DATE 12/17/10 PLATE NO. R6-1.2

PROJECT NO:

SHEET NO: 198 E

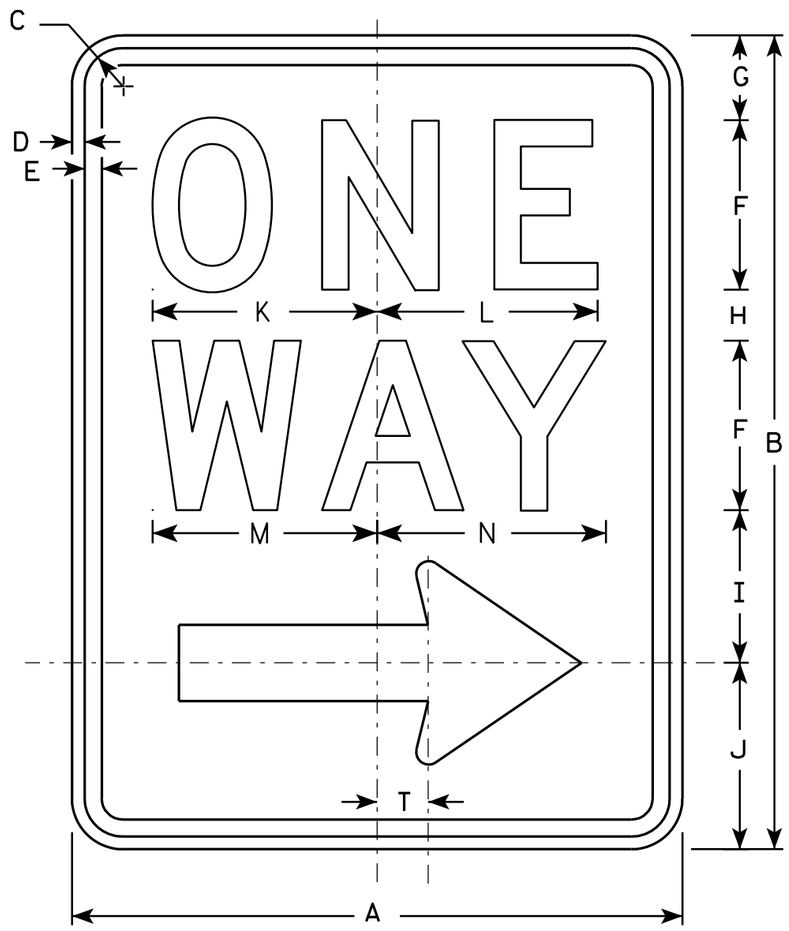

R6-2R

NOTES

1. Sign is Type II - Type H Reflective - reference WIS DOT Standard Specification for HIGHWAY and STRUCTURE CONSTRUCTION latest edition.
2. Color:
   Background - White
   Message - Black
3. Message Series - D
4. Corners may be square or rounded when base material is plywood but borders shall be rounded as shown. When base material is metal, the corners and borders shall be rounded.
5. R6-2L same as R6-2R except arrow points to the left.

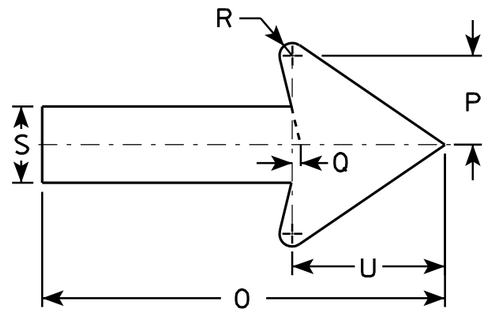

SIZE	A	B	C	D	E	F	G	H	I	J	K	L	M	N	O	P	Q	R	S	T	U	V	W	X	Y	Z
1	18	24	1 1/8	3/8	1/2	5	2 1/2	1 1/2	4 1/2	5 1/2	6 5/8	6 1/2	6 5/8	6 3/4	11 7/8	2 5/8	1/4	3/8	2 1/4	1 1/2	4 1/2					
2S	24	30	1 1/8	3/8	1/2	6	3	2 1/2	5 1/2	7	8 1/8	8 1/8	8 1/2	8 5/8	16	3 1/2	3/8	1/2	3	2	6					
2M	30	36	1 3/8	1/2	5/8	8	2 1/2	2 5/8	6 7/8	8	10 1/2	10 1/2	11 1/4	11 1/4	20	4 3/8	1/2	5/8	3 3/4	2 1/2	7 1/2					
3	36	48	1 7/8	1/2	5/8	10	5 1/4	3 1/4	9	10 1/2	12 3/4	12 3/4	13 1/4	13 1/2	24	5 5/8	1/2	3/4	4 3/4	3	9					
4	36	48	1 7/8	1/2	5/8	10	5 1/4	3 1/4	9	10 1/2	12 3/4	12 3/4	13 1/4	13 1/2	24	5 5/8	1/2	3/4	4 3/4	3	9					
5																										

STANDARD SIGN
R6-2 R&L

WISCONSIN DEPT OF TRANSPORTATION

APPROVED Matthew R Rauch
for State Traffic Engineer

DATE 11/2/10 PLATE NO. R6-2.8

PROJECT NO: | HWY: | COUNTY: | SHEET NO: 199 | E

NOTES

1. Sign is Type II - Type H Reflective - reference WIS DOT Standard Specification for HIGHWAY and STRUCTURE CONSTRUCTION latest edition.
2. Color:
   Background - WHITE
   Message - BLACK
3. Corners may be square or rounded when base material is plywood but borders shall be rounded as shown. When base material is metal, the corners and borders shall be rounded.

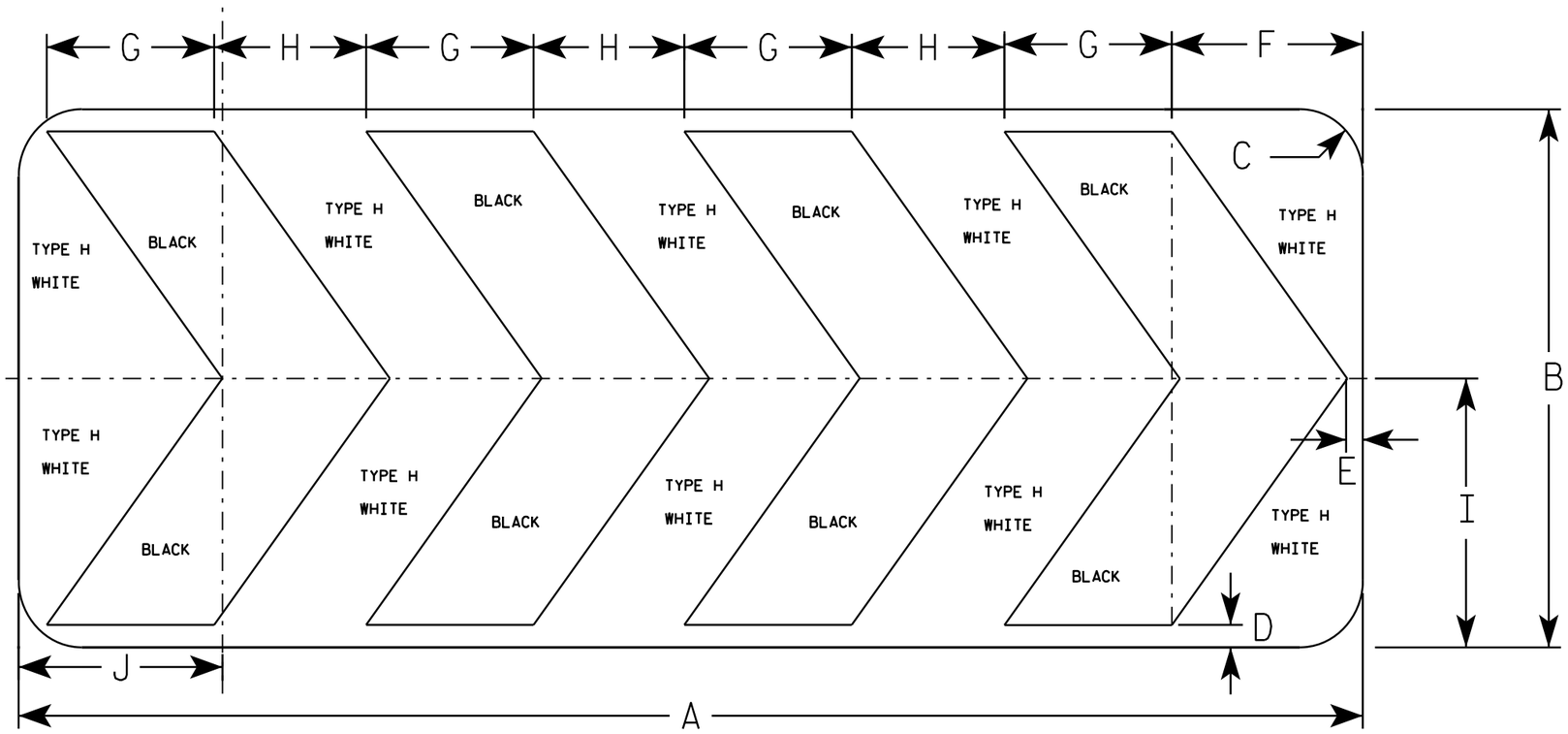

R6-4B

SIZE	A	B	C	D	E	F	G	H	I	J	K	L	M	N	O	P	Q	R	S	T	U	V	W	X	Y	Z	Area sq. ft.
1																											
2S	60	24	2 1/4	1	3/4	8 1/2	7 1/2	6 3/4	12	9 1/8																	10.0
2M	60	24	2 1/4	1	3/4	8 1/2	7 1/2	6 3/4	12	9 1/8																	10.0
3																											
4																											
5																											

STANDARD SIGN
R6-4B

WISCONSIN DEPT OF TRANSPORTATION

APPROVED Matthew R Rauch
for State Traffic Engineer

DATE 1/03/11 PLATE NO. R6-4B.2

PROJECT NO:

SHEET NO: 200 E

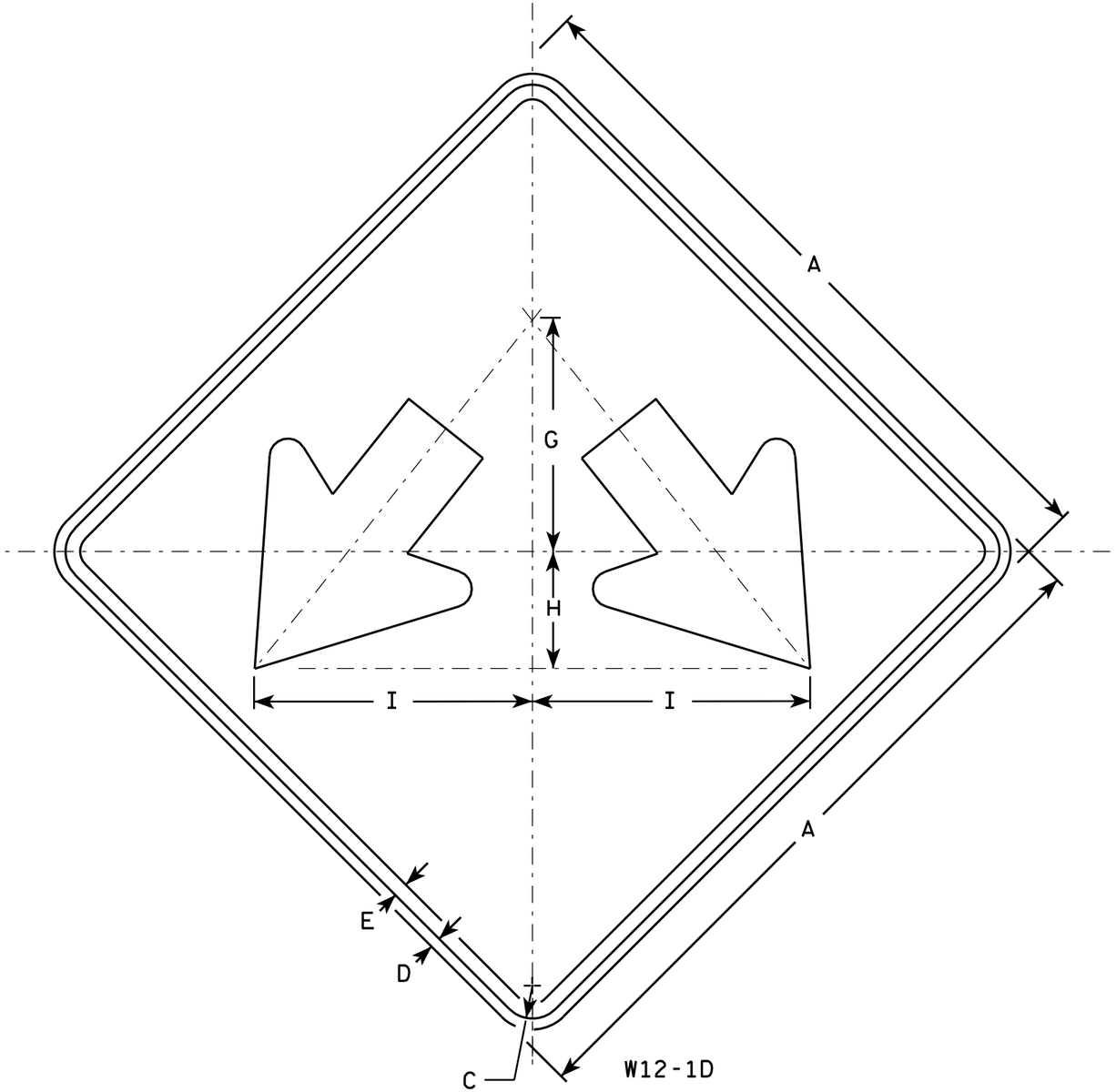

NOTES

1. Sign is Type II - Type H Reflective - reference WIS DOT Standard Specification for HIGHWAY and STRUCTURE CONSTRUCTION latest edition.
2. Color:
   Background - Yellow
   Message - Black
3. Corners may be square or rounded when base material is plywood but borders shall be rounded as shown. When base material is metal, the corners and borders shall be rounded.

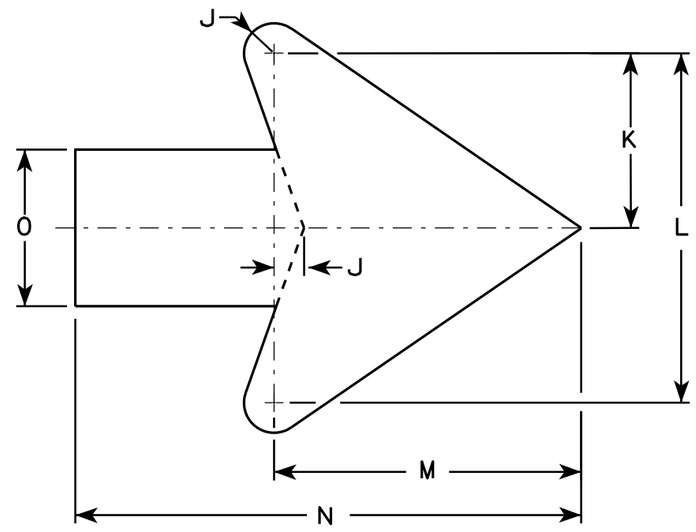

Arrow Detail

SIZE	A	B	C	D	E	F	G	H	I	J	K	L	M	N	O	P	Q	R	S	T	U	V	W	X	Y	Z	Area sq. ft.
1																											
2S	24		1 1/8	1/2	3/8		8	4	9 1/2	3/8	3 3/8	7 1/4	6 3/8	10 3/8	3 1/4												4.0
2M	24		1 1/8	1/2	3/8		8	4	9 1/2	3/8	3 3/8	7 1/4	6 3/8	10 3/8	3 1/4												4.0
3	30		1 3/8	1/2	5/8		10	5	11 7/8	3/4	4 1/2	9	7 7/8	13	4												6.25
4	36		1 3/8	1/2	5/8		12	6	14 1/4	1	5 1/2	10 7/8	9 5/8	15 3/4	4 3/4												9.0
5	48		2 1/4	3/4	1		16	8	19	1 1/4	7 1/4	14 1/2	12 3/4	21	6 1/4												16.0

STANDARD SIGN
W12-1D

WISCONSIN DEPT OF TRANSPORTATION

APPROVED Matthew R Rauch
for State Traffic Engineer

DATE 3/15/11 PLATE NO. W12-1D.14

PROJECT NO:	HWY:	COUNTY:		SHEET NO: 201	E

FILE NAME : C:\Users\PROJECTS\tr_stdplate\W121D.DGN PLOT DATE : 16-MAR-2011 14:10 PLOT BY : mscj9h PLOT NAME : PLOT SCALE : 4.717577:1.000000

WISDOT/CADDS SHEET 42

7

7

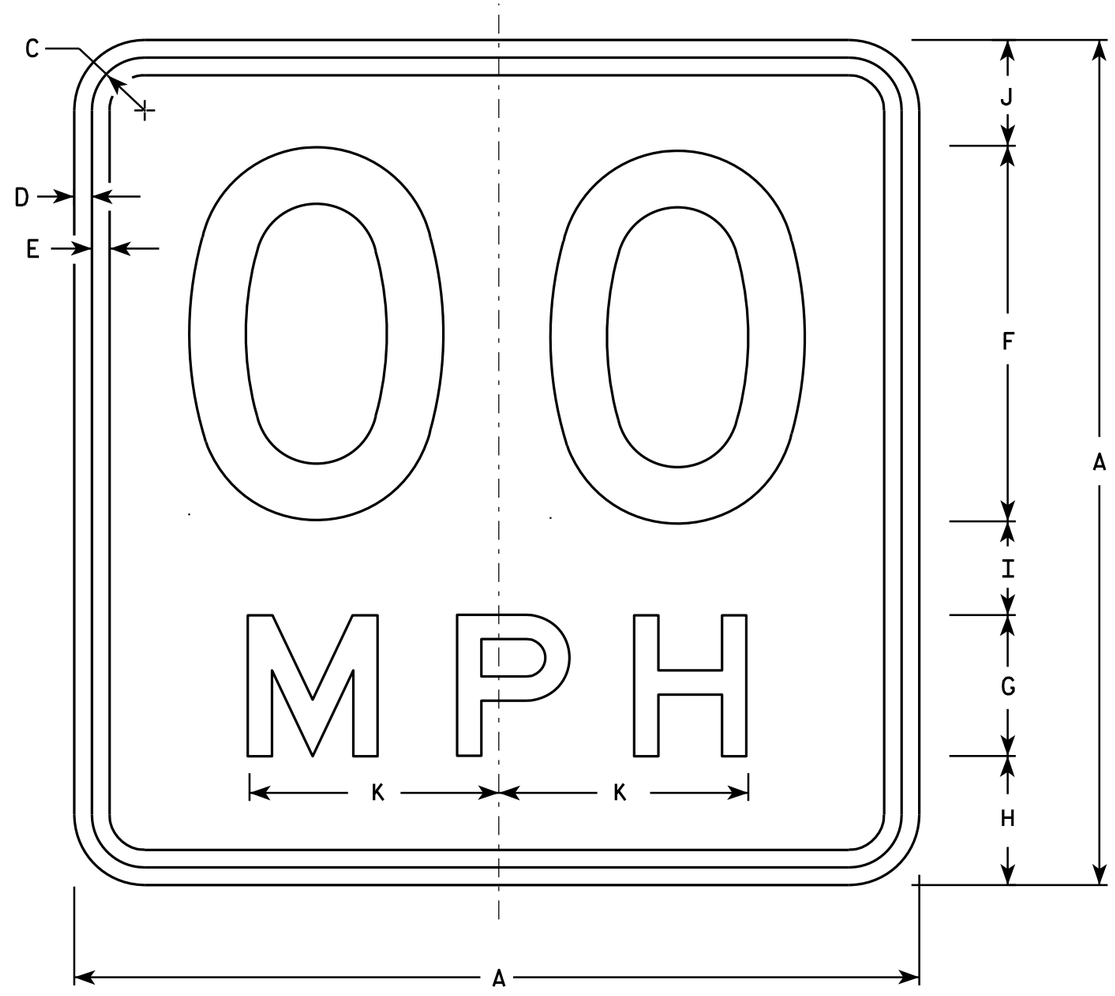

W13-1

* For 30" x 30" Warning Signs, use 18" x 18" W13-1 signs.
For 36" x 36" Warning Signs, use 24" x 24" W13-1 signs.

NOTES

1. Sign is Type II - Type H Reflective - reference WIS DOT Standard Specification for HIGHWAY and STRUCTURE CONSTRUCTION latest edition.
2. Color:
   Background - Yellow
   Message - Black
3. Message Series - See Note 6
4. Corners may be square or rounded when base material is plywood but borders shall be rounded as shown. When base material is metal, the corners and borders shall be rounded.
5. Substitute appropriate numerals and optically space about centerline to achieve proper balance.
6. Line 1 is Series D
   Line 2 is Series E

	SIZE	A	B	C	D	E	F	G	H	I	J	K	L	M	N	O	P	Q	R	S	T	U	V	W	X	Y	Z	Area sq. ft.
	1	18		1 1/8	3/8	3/8	8	3	2 3/4	2	2 1/4	5 3/8																2.25
*	2S	18		1 1/8	3/8	3/8	8	3	2 3/4	2	2 1/4	5 3/8																2.25
*	2M	18		1 1/8	3/8	3/8	8	3	2 3/4	2	2 1/4	5 3/8																2.25
	3	24		1 1/8	3/8	1/2	10	4	4	2 3/4	3 1/4	6 5/8																4.00
	4	36		1 5/8	5/8	3/4	16	6	5 1/2	4	4 1/2	10 5/8																9.00
	5	36		1 5/8	5/8	3/4	16	6	5 1/2	4	4 1/2	10 5/8																9.00

STANDARD SIGN
W13-1

WISCONSIN DEPT OF TRANSPORTATION

APPROVED Matthew R Rauch
for State Traffic Engineer

DATE 3/16/11 PLATE NO. W13-1.15

PROJECT NO:	HWY:	COUNTY:		SHEET NO: 202	E

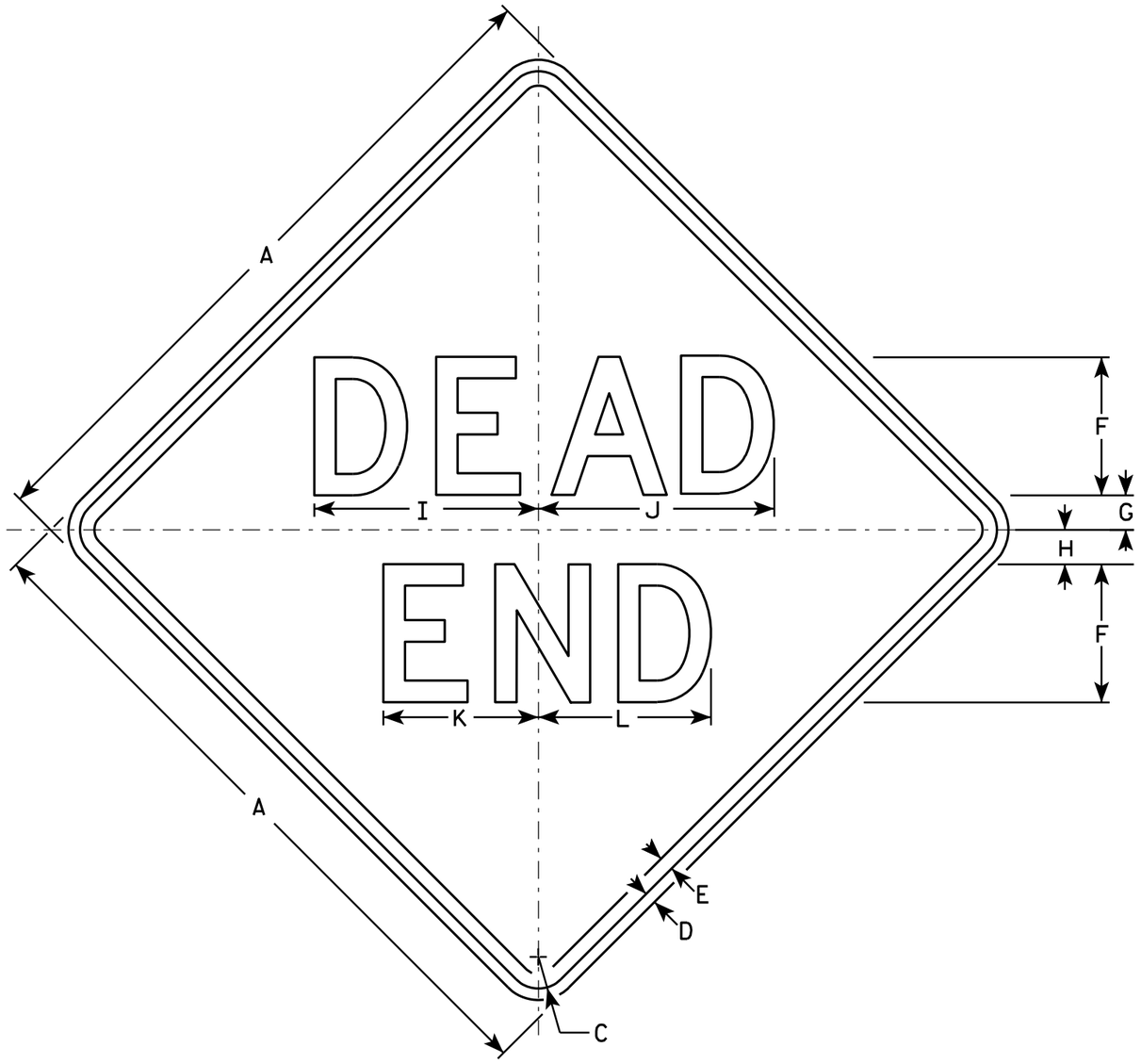

W14-1

NOTES

1. Sign is Type II - Type H Reflective - reference WIS DOT Standard Specification for HIGHWAY and STRUCTURE CONSTRUCTION latest edition.
2. Color:
   Background - Yellow
   Message - Black
3. Message Series - D
4. Corners may be square or rounded when base material is plywood but borders shall be rounded as shown. When base material is metal, the corners and borders shall be rounded.

SIZE	A	B	C	D	E	F	G	H	I	J	K	L	M	N	O	P	Q	R	S	T	U	V	W	X	Y	Z	Area sq. ft.
1	24		1 1/8	3/8	1/2	5	1	2	8 1/4	8 5/8	5 5/8	6 1/4															4.0
2S	30		1 3/8	1/2	5/8	6	1 1/2	2 1/2	9 3/4	10 1/4	6 3/4	7 1/2															6.25
2M	30		1 3/8	1/2	5/8	6	1 1/2	2 1/2	9 3/4	10 1/4	6 3/4	7 1/2															6.25
3	36		1 5/8	5/8	3/4	7	2	3	11 3/8	12	7 7/8	8 3/4															9.0
4																											
5																											

STANDARD SIGN
W14-1

WISCONSIN DEPT OF TRANSPORTATION

APPROVED Matthew R Rauch
for State Traffic Engineer

DATE 3/16/11 PLATE NO. W14-1.6

PROJECT NO:	HWY:	COUNTY:		SHEET NO: 203	E

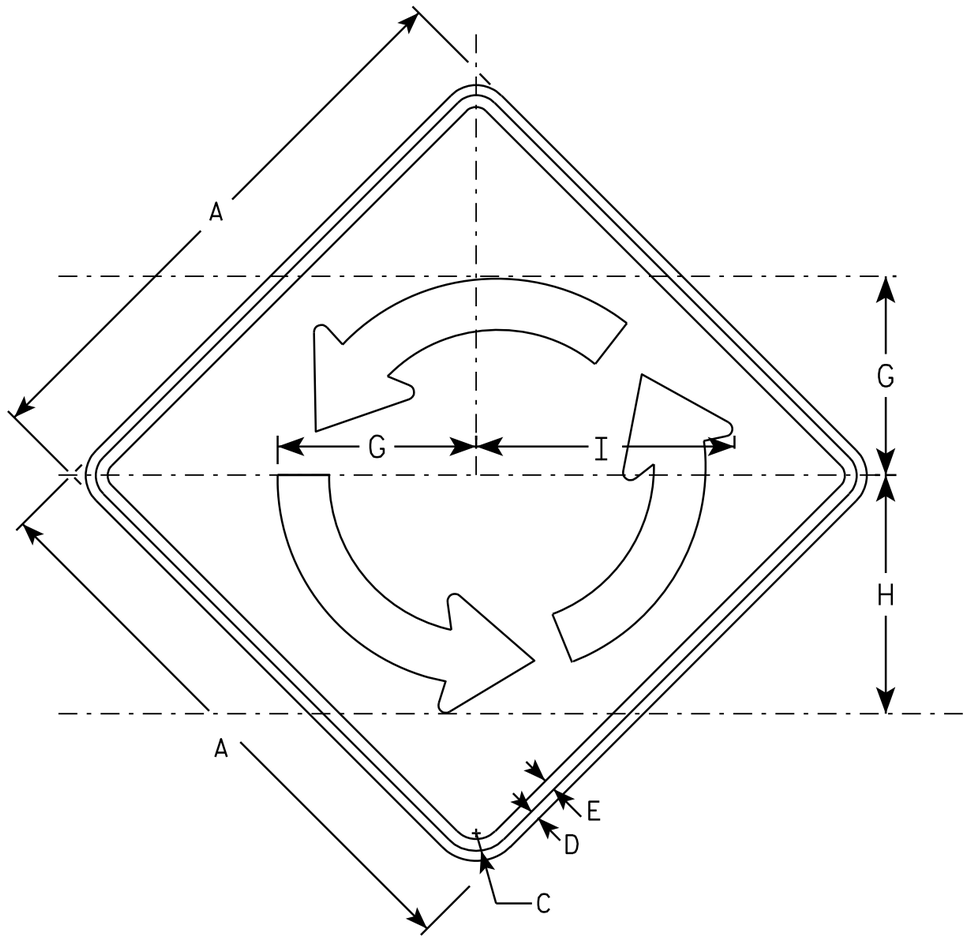

W2-6

NOTES

1. Sign is Type II - Type H Reflective - reference WIS DOT Standard Specification for HIGHWAY and STRUCTURE CONSTRUCTION latest edition.
2. Color:
   Background - YELLOW
   Message - BLACK
3. Message Series - B
4. Corners may be square or rounded when base material is plywood but borders shall be rounded as shown. When base material is metal, the corners and borders shall be rounded.

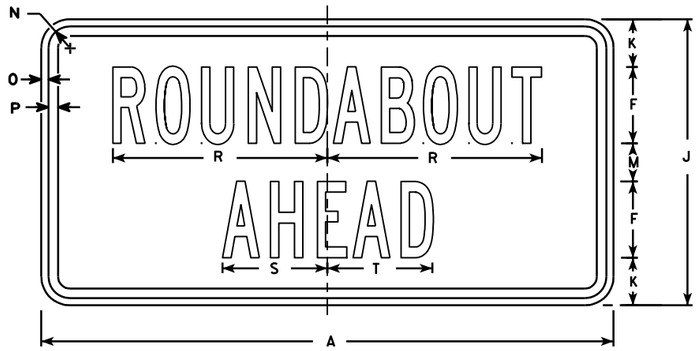

W2-6P

SIZE	A	B	C	D	E	F	G	H	I	J	K	L	M	N	O	P	Q	R	S	T	U	V	W	X	W2-6 Area sq. ft.	W2-6P Area sq. ft.
1																										
2S	30		1 3/8	1/2	5/8	4	10 3/8	12 1/2	13 1/2	15	2 1/2		2	1 1/8	3/8	1/2		11 1/4	5 1/2	5 1/2					6.25	3.12
2M	30		1 3/8	1/2	5/8	4	10 3/8	12 1/2	13 1/2	15	2 1/2		2	1 1/8	3/8	1/2		11 1/4	5 1/2	5 1/2					6.25	3.12
3	36		1 5/8	5/8	3/4	5	12 1/2	15	16 1/4	18	2 5/8		2 3/4	1 1/8	3/8	1/2		14	7	6 3/4					9.00	4.50
4	48		2 1/4	3/4	1	6	16 5/8	20	16 1/4	24	4 3/8		3 5/8	1 3/8	1/2	5/8		17	8 1/4	8 1/4					16.0	8.0
5																										

STANDARD SIGN
W2-6

WISCONSIN DEPT OF TRANSPORTATION

APPROVED Matthew R Rauch
for State Traffic Engineer

DATE 3/21/11 PLATE NO. W2-6.4

PROJECT NO:

SHEET NO: 204 E

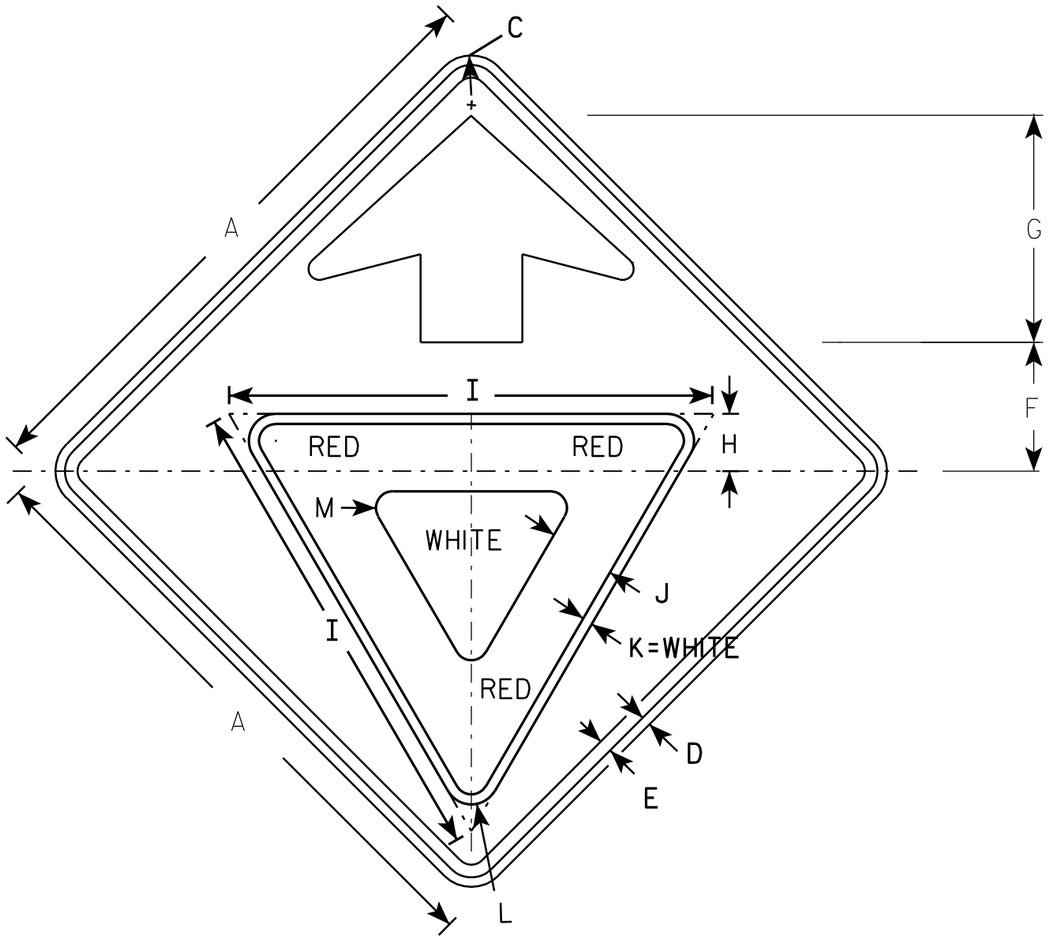

W3-2

NOTES

1. All Signs Type II - Type F Reflective - reference WIS DOT Standard Specification for HIGHWAY and STRUCTURE CONSTRUCTION latest edition.
2. Color:
   Background - YELLOW
   Arrow & Border - BLACK
   Yield Symbol - WHITE BORDER ON RED BACKGROUND

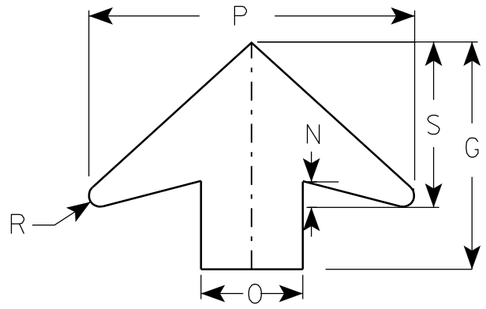

ARROW DETAIL

SIZE	A	B	C	D	E	F	G	H	I	J	K	L	M	N	O	P	Q	R	S	T	U	V	W	X	Y	Z	Area sq. ft.
1	30		1 3/8	1/2	5/8	6 1/4	11 1/4	3	25	3 3/8	1/2	1 3/8	7/8	1 1/4	5	16		1/2	8								6.25
2S	36		1 5/8	5/8	3/4	7 1/2	13 1/2	3 3/8	28	3 3/4	5/8	1 1/2	1	1 5/8	6	19 1/4		5/8	9 3/4								9.0
2M	36		1 5/8	5/8	3/4	7 1/2	13 1/2	3 3/8	28	3 3/4	5/8	1 1/2	1	1 5/8	6	19 1/4		5/8	9 3/4								9.0
3	36		1 5/8	5/8	3/4	7 1/2	13 1/2	3 3/8	28	3 3/4	5/8	1 1/2	1	1 5/8	6	19 1/4		5/8	9 3/4								9.0
4	48		2 1/4	3/4	1	10	17 7/8	4 1/2	38	5	3/4	2 1/8	1 3/8	2	8	25 5/8		7/8	13								16.0
5	48		2 1/4	3/4	1	10	17 7/8	4 1/2	38	5	3/4	2 1/8	1 3/8	2	8	25 5/8		7/8	13								16.0

STANDARD SIGN
W3-2

WISCONSIN DEPT OF TRANSPORTATION

APPROVED Matthew R Rauch
for State Traffic Engineer

DATE 6/7/10 PLATE NO. W3-2..9

PROJECT NO:

SHEET NO: 205 E

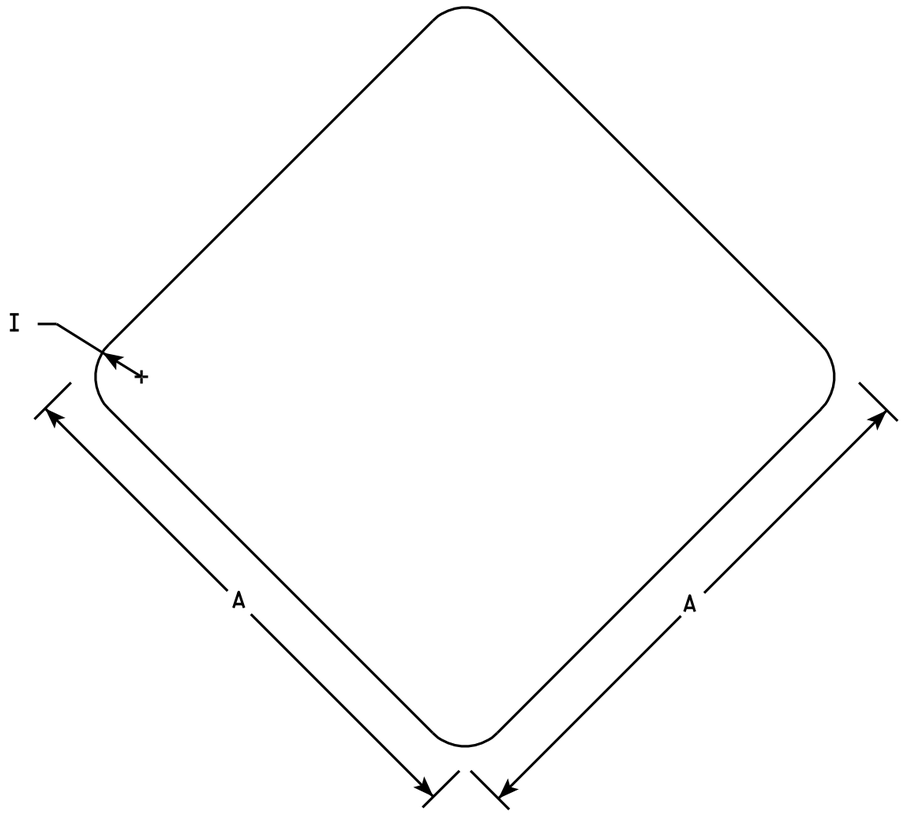

W5-56

NOTES

1. Sign is Type II - Type SH Reflective - reference WIS DOT Standard Specification for HIGHWAY and STRUCTURE CONSTRUCTION latest edition.
2. Color:
   Background - Red
3. Corners may be square or rounded when base material is plywood. When base material is metal the corners shall be rounded.

SIZE	A	B	C	D	E	F	G	H	I	J	K	L	M	N	O	P	Q	R	S	T	U	V	W	X	Y	Z	Area sq. ft.
1	12								1																		1.0
2S	18								1 ½																		2.25
2M	18								1 ½																		2.25
3																											
4																											
5																											

STANDARD SIGN
W5-56

WISCONSIN DEPT OF TRANSPORTATION

APPROVED Matthew R Rauch
for State Traffic Engineer

DATE 11/2/10 PLATE NO. W5-56.6

PROJECT NO:	HWY:	COUNTY:		SHEET NO: 206	E

STH 15 EAST LEG @ CTH CB

STATION	Real Station	Distance	AREA (SF)				Incremental Vol (CY) (Unadjusted)				Cumulative Vol (CY)			
			Cut	Salvaged/Unusable Pavement Material	Fill	Rock Exc	Cut Note 1	Salvaged/Unusable Pavement Material Note 2	Fill Note 3	Rock Exc	Cut 1.33 Note 1	Expanded Fill 1.15	Expanded Rock 1.10	Mass Ordinate Note 4
174+85.50	17,486		9	58	54	0								
175+00.00	17,500	15	15	58	186	0	7	31	64	0	9	74	0	-98.54
175+25.00	17,525	25	23	58	248	0	18	54	201	0	32	305	0	-365.69
175+50.00	17,550	25	51	58	143	0	34	54	181	0	78	513	0	-593.04
175+75.00	17,575	25	81	58	126	0	61	54	124	0	160	656	0	-728.32
175+97.00	17,597	22	137	58	125	0	89	47	102	0	277	774	0	-804.15
176+00.00	17,600	3	131	58	115	0	15	6	13	0	297	789	0	-811.00
176+25.00	17,625	25	215	58	114	0	160	54	106	0	510	911	0	-826.33
176+50.00	17,650	25	241	58	98	0	211	54	98	0	791	1,024	0	-781.93
176+75.00	17,675	25	257	58	84	0	231	54	84	0	1,097	1,121	0	-701.67
177+00.00	17,700	25	281	58	59	0	249	54	66	0	1,429	1,197	0	-581.87
177+25.00	17,725	25	322	58	38	0	279	54	45	0	1,800	1,248	0	-407.63
177+50.00	17,750	25	357	58	19	0	314	54	26	0	2,218	1,278	0	-177.08
177+75.00	17,775	25	415	58	8	0	358	54	13	0	2,694	1,292	0	112.49
178+00.00	17,800	25	501	58	9	0	424	54	8	0	3,258	1,302	0	473.75
178+25.00	17,825	25	563	58	9	0	492	54	8	0	3,913	1,311	0	903.14
178+50.00	17,850	25	602	58	2	0	539	54	5	0	4,630	1,317	0	1,383.13
178+75.00	17,875	25	598	58	2	0	555	54	2	0	5,369	1,319	0	1,882.82
178+84.00	17,884	9	596	58	2	0	199	19	1	0	5,633	1,320	0	2,061.67
179+00.00	17,900	16	589	58	6	0	351	34	2	0	6,100	1,322	0	2,375.65
179+25.00	17,925	25	577	58	7	0	540	54	6	0	6,818	1,329	0	2,855.01
179+50.00	17,950	25	563	58	11	0	528	54	8	0	7,520	1,339	0	3,320.02
179+75.00	17,975	25	548	58	13	0	515	54	11	0	8,205	1,351	0	3,768.54
180+00.00	18,000	25	530	58	26	0	499	54	18	0	8,868	1,372	0	4,193.42
180+25.00	18,025	25	497	58	32	0	475	54	27	0	9,501	1,403	0	4,584.42
180+50.00	18,050	25	477	58	47	0	451	54	37	0	10,100	1,445	0	4,939.45
180+75.00	18,075	25	464	58	58	0	435	54	49	0	10,679	1,500	0	5,265.45
181+00.00	18,100	25	446	58	68	0	421	54	58	0	11,239	1,567	0	5,565.84
181+25.00	18,125	25	428	58	78	0	405	54	67	0	11,777	1,645	0	5,839.23
181+50.00	18,150	25	447	58	85	0	405	54	75	0	12,316	1,731	0	6,104.75
181+75.00	18,175	25	429	58	92	0	406	54	82	0	12,856	1,825	0	6,362.83
182+00.00	18,200	25	406	58	96	0	387	54	87	0	13,370	1,926	0	6,595.78
182+25.00	18,225	25	376	58	110	0	362	54	95	0	13,852	2,035	0	6,794.79
182+50.00	18,250	25	343	58	69	0	333	54	83	0	14,294	2,130	0	6,978.93
182+75.00	18,275	25	325	58	120	0	309	54	87	0	14,706	2,231	0	7,134.30
183+00.00	18,300	25	338	58	71	0	307	54	88	0	15,114	2,332	0	7,286.13
183+25.00	18,325	25	302	58	46	0	296	54	54	0	15,508	2,394	0	7,466.53
183+50.00	18,350	25	257	58	26	0	259	54	33	0	15,852	2,433	0	7,633.40
183+75.00	18,375	25	235	58	2	0	228	54	13	0	16,155	2,448	0	7,792.69
184+00.00	18,400	25	222	58	2	0	212	54	2	0	16,437	2,450	0	7,948.42
184+25.00	18,425	25	223	58	6	0	206	54	4	0	16,711	2,454	0	8,096.25
184+50.00	18,450	25	232	58	13	0	211	54	9	0	16,991	2,464	0	8,243.38
184+75.00	18,475	25	236	58	13	0	217	54	12	0	17,280	2,478	0	8,393.34
185+00.00	18,500	25	227	58	24	0	215	54	17	0	17,565	2,497	0	8,534.96
185+25.00	18,525	25	219	58	28	0	207	54	24	0	17,840	2,525	0	8,660.43
185+50.00	18,550	25	214	58	29	0	201	54	27	0	18,107	2,556	0	8,777.12
185+75.00	18,575	25	206	58	45	0	195	54	34	0	18,366	2,595	0	8,878.96
186+00.00	18,600	25	200	58	55	0	188	54	46	0	18,617	2,648	0	8,960.37
186+25.00	18,625	25	197	58	53	0	184	54	50	0	18,861	2,706	0	9,033.07
186+50.00	18,650	25	194	58	35	0	181	54	41	0	19,102	2,753	0	9,113.37
186+75.00	18,675	25	190	58	24	0	178	54	28	0	19,338	2,785	0	9,205.77
187+00.00	18,700	25	188	58	26	0	175	54	23	0	19,571	2,811	0	9,300.42
187+25.00	18,725	25	191	58	12	0	175	54	17	0	19,804	2,831	0	9,402.04
187+50.00	18,750	25	195	58	6	0	179	54	8	0	20,042	2,841	0	9,517.53
187+75.00	18,775	25	201	58	3	0	183	54	4	0	20,285	2,846	0	9,642.40
188+00.00	18,800	25	0	58	0	0	93		1	0	20,409	2,847	0	9,733.84
						TOTAL	15,345	2,764	2,476	0				

1) Common Excavation is the sum of the Cut and EBS Excavation columns.
2) Salvaged/Unusable Pavement Material is included in Cut.
3) Available Material = Cut - Salvaged/Unusable Pavement Material.
4) Mass Ordinate = [Cut - (Fill * Fill Factor)]

STH 15 WEST LEG @ CTH CB

STATION	Real Station	Distance	AREA (SF) Cut	AREA (SF) Salvaged/Unusable Pavement Material	AREA (SF) Fill	AREA (SF) Rock Exc	Incremental Vol (CY) (Unadjusted) Cut Note 1	Incremental Vol (CY) (Unadjusted) Salvaged/Unusable Pavement Material Note 2	Incremental Vol (CY) (Unadjusted) Fill Note 3	Incremental Vol (CY) (Unadjusted) Rock Exc	Cumulative Vol (CY) Cut 1.33 Note 1	Cumulative Vol (CY) Expanded Fill 1.15	Cumulative Vol (CY) Expanded Rock 1.10	Mass Ordinate Note 4
165+00.00	16,500		0	46	0	0								
165+25.00	16,525	25	0	46	0	0	0	42	0	0	0	0	0	-42.29
165+50.00	16,550	25	0	46	0	0	0	42	0	0	0	0	0	-84.58
165+75.00	16,575	25	0	46	0	0	0	42	0	0	0	0	0	-126.87
166+00.00	16,600	25	39	46	6	0	18	42	3	0	24	3	0	-154.02
166+25.00	16,625	25	39	46	8	0	36	42	6	0	72	10	0	-167.03
166+50.00	16,650	25	43	46	12	0	38	42	9	0	123	21	0	-181.49
166+75.00	16,675	25	51	46	15	0	43	42	12	0	181	35	0	-194.70
167+00.00	16,700	25	55	46	17	0	49	42	15	0	246	52	0	-205.30
167+18.27	16,718	18	157	46	15	0	71	31	11	0	341	64	0	-177.00
167+25.00	16,725	7	113	46	14	0	34	11	4	0	386	68	0	-158.90
167+50.00	16,750	25	142	46	14	0	118	42	13	0	543	83	0	-98.15
167+75.00	16,775	25	144	46	9	0	132	42	11	0	718	95	0	-20.75
168+00.00	16,800	25	146	46	8	0	134	42	8	0	896	105	0	61.63
168+25.00	16,825	25	118	46	9	0	122	42	8	0	1,058	114	0	131.91
168+50.00	16,850	25	132	46	13	0	115	42	11	0	1,212	126	0	192.95
168+75.00	16,875	25	128	46	30	0	120	42	20	0	1,372	149	0	247.49
169+00.00	16,900	25	121	46	47	0	115	42	36	0	1,524	190	0	279.15
169+25.00	16,925	25	125	46	58	0	114	42	48	0	1,676	246	0	294.97
169+50.00	16,950	25	99	46	77	0	104	42	62	0	1,813	318	0	284.68
169+75.00	16,975	25	73	46	88	0	80	42	76	0	1,920	405	0	234.44
170+00.00	17,000	25	47	46	66	0	56	42	71	0	1,994	487	0	165.69
170+25.00	17,025	25	32	46	83	0	36	42	69	0	2,042	567	0	80.45
170+50.00	17,050	25	24	46	108	0	26	42	88	0	2,076	668	0	-37.72
170+75.00	17,075	25	16	46	170	0	18	42	129	0	2,100	816	0	-209.38
171+00.00	17,100	25	23	46	211	0	18	42	176	0	2,124	1,019	0	-436.55
171+25.00	17,125	25	24	46	244	0	22	42	211	0	2,153	1,261	0	-699.44
171+50.00	17,150	25	38	46	241	0	29	42	224	0	2,191	1,519	0	-970.67
171+75.00	17,175	25	38	46	231	0	36	42	218	0	2,239	1,770	0	-1,228.66
171+82.00	17,182	7	40	46	247	0	10	12	62	0	2,252	1,841	0	-1,301.61
172+00.00	17,200	18	43	46	331	0	27	30	192	0	2,289	2,062	0	-1,525.78
172+25.00	17,225	25	50	46	292	0	43	42	288	0	2,346	2,394	0	-1,856.74
172+50.00	17,250	25	70	46	314	0	56	42	281	0	2,420	2,717	0	-2,166.18
172+75.00	17,275	25	27	46	399	0	45	42	330	0	2,480	3,096	0	-2,542.82
173+00.00	17,300	25	0	46	0	0	13		185	0	2,496	3,309	0	-2,742.56
						TOTAL	1,877	1,311	2,877	0				

1) Common Excavation is the sum of the Cut and EBS Excavation columns.
2) Salvaged/Unusable Pavement Material is included in Cut.
3) Available Material = Cut - Salvaged/Unusable Pavement Material.
4) Mass Ordinate = [Cut - (Fill * Fill Factor)]

CTH CB SOUTH LEG @ STH 15

STATION	Real Station	Distance	AREA (SF)				Incremental Vol (CY) (Unadjusted)				Cumulative Vol (CY)			
			Cut	Salvaged/Unusable Pavement Material	Fill	Rock Exc	Cut Note 1	Salvaged/Unusable Pavement Material Note 2	Fill Note 3	Rock Exc	Cut 1.33 Note 1	Expanded Fill 1.15	Expanded Rock 1.10	Mass Ordinate Note 4
16+25.00	1,625		0	38	0	0								
16+50.00	1,650	25	127	38	17	0	59	35	8	0	78	9	0	14.05
16+75.00	1,675	25	119	38	15	0	114	35	15	0	229	27	0	74.87
17+00.00	1,700	25	114	38	23	0	108	35	18	0	373	47	0	126.85
17+25.00	1,725	25	111	38	41	0	104	35	30	0	512	82	0	161.68
17+50.00	1,750	25	115	38	27	0	105	35	31	0	651	118	0	195.15
17+75.00	1,775	25	112	38	91	0	105	35	55	0	791	181	0	202.05
17+93.00	1,793	18	118	38	115	0	77	25	69	0	893	260	0	174.23
18+00.00	1,800	7	124	38	98	0	31	10	28	0	935	291	0	164.01
18+25.00	1,825	25	168	38	116	0	135	35	99	0	1,115	406	0	149.72
18+50.00	1,850	25	179	38	137	0	161	35	117	0	1,329	540	0	140.48
18+75.00	1,875	25	123	38	178	0	140	35	146	0	1,515	708	0	77.69
19+00.00	1,900	25	110	38	154	0	108	35	154	0	1,658	885	0	-26.29
19+25.00	1,925	25	115	38	98	0	104	35	117	0	1,797	1,019	0	-91.60
19+50.00	1,950	25	65	38	40	0	84		64	0	1,908	1,092	0	-81.53
						TOTAL	1,435	424	950	0				

1) Common Excavation is the sum of the Cut and EBS Excavation columns.
2) Salvaged/Unusable Pavement Material is included in Cut.
3) Available Material = Cut - Salvaged/Unusable Pavement Material.
4) Mass Ordinate = [Cut - (Fill * Fill Factor)]

CTH CB NORTH LEG @ STH 15

STATION	Real Station	Distance	AREA (SF)				Incremental Vol (CY) (Unadjusted)				Cumulative Vol (CY)			
			Cut	Salvaged/Unusable Pavement Material	Fill	Rock Exc	Cut Note 1	Salvaged/Unusable Pavement Material Note 2	Fill Note 3	Rock Exc	Cut 1.33 Note 1	Expanded Fill 1.15	Expanded Rock 1.10	Mass Ordinate Note 4
21+75.00	2,175		0	0	359	0								
21+81.00	2,181	6	7	0	296	0	1	0	73	0	1	84	0	-82.81
22+00.00	2,200	19	94	0	110	0	36	0	143	0	48	248	0	-211.62
22+25.00	2,225	25	224	0	28	0	147	0	64	0	244	321	0	-138.03
22+50.00	2,250	25	321	0	8	0	252	0	17	0	579	340	0	94.92
22+75.00	2,275	25	364	0	1	0	317	0	4	0	1,001	345	0	407.36
23+00.00	2,300	25	421	0	0	0	364	0	0	0	1,484	345	0	770.62
23+25.00	2,325	25	350	0	0	0	357	0	0	0	1,959	345	0	1,127.60
23+50.00	2,350	25	327	0	1	0	314	0	1	0	2,376	346	0	1,440.53
23+75.00	2,375	25	297	0	4	0	289	0	2	0	2,760	349	0	1,726.86
24+00.00	2,400	25	242	0	12	0	249	0	7	0	3,092	357	0	1,967.66
24+25.00	2,425	25	279	0	13	0	241	0	12	0	3,413	371	0	2,195.17
24+50.00	2,450	25	301	0	18	0	269	0	15	0	3,770	388	0	2,446.97
24+75.00	2,475	25	232	0	37	0	247	0	26	0	4,098	417	0	2,664.52
25+00.00	2,500	25	149	0	63	0	177	0	46	0	4,333	470	0	2,788.05
25+25.00	2,525	25	90	0	114	0	111	0	82	0	4,480	564	0	2,804.76
25+50.00	2,550	25	42	0	181	0	61	0	136	0	4,562	721	0	2,709.18
25+75.00	2,575	25	24	0	249	0	31	0	199	0	4,603	950	0	2,510.82
26+00.00	2,600	25	14	0	295	0	18	0	252	0	4,626	1,239	0	2,238.93
26+25.00	2,625	25	16	0	301	0	14	0	276	0	4,645	1,557	0	1,935.96
26+50.00	2,650	25	53	0	250	0	32	0	255	0	4,688	1,850	0	1,674.86
26+75.00	2,675	25	138	0	210	0	88	0	213	0	4,806	2,095	0	1,518.21
27+00.00	2,700	25	238	0	181	0	174	0	181	0	5,037	2,303	0	1,483.93
27+25.00	2,725	25	300	0	149	0	249	0	152	0	5,368	2,479	0	1,557.68
27+50.00	2,750	25	345	0	112	0	298	0	121	0	5,765	2,618	0	1,717.15
27+75.00	2,775	25	344	0	86	0	319	0	92	0	6,189	2,723	0	1,930.34
28+00.00	2,800	25	321	0	63	0	308	0	69	0	6,599	2,802	0	2,159.18
28+25.00	2,825	25	266	0	46	0	272	0	50	0	6,961	2,860	0	2,373.49
28+50.00	2,850	25	196	0	40	0	214	0	40	0	7,245	2,906	0	2,541.92
28+75.00	2,875	25	53	0	44	0	115	0	39	0	7,399	2,950	0	2,612.40
29+00.00	2,900	25	13	0	63	0	30	0	49	0	7,439	3,007	0	2,585.92
29+25.00	2,925	25	7	0	116	0	9	0	83	0	7,451	3,103	0	2,499.74
29+50.00	2,950	25	6	0	86	0	6	0	93	0	7,459	3,210	0	2,398.27
29+75.00	2,975	25	28	0	44	0	16	0	60	0	7,480	3,279	0	2,345.02
30+00.00	3,000	25	106	0	30	0	62	0	34	0	7,563	3,319	0	2,367.92
30+25.00	3,025	25	173	0	19	0	129	0	23	0	7,735	3,345	0	2,471.04
30+50.00	3,050	25	189	0	19	0	167	0	18	0	7,958	3,365	0	2,617.94
30+75.00	3,075	25	176	0	21	0	169	0	19	0	8,183	3,387	0	2,765.31
31+00.00	3,100	25	116	0	41	0	135	0	29	0	8,363	3,420	0	2,867.39
31+06.00	3,106	6	107	0	43	0	25	0	9	0	8,396	3,431	0	2,881.43
31+25.00	3,125	19	85	0	57	0	68	0	35	0	8,486	3,472	0	2,908.68
31+50.00	3,150	25	24	0	1	0	51	0	27	0	8,553	3,502	0	2,928.69
31+75.00	3,175	25	18	0	0	0	20	0	0	0	8,579	3,503	0	2,947.93
32+00.00	3,200	25	38	0	0	0	26	0	0	0	8,614	3,503	0	2,973.77
32+25.00	3,225	25	45	0	56	0	38	0	26	0	8,665	3,532	0	2,982.53
32+50.00	3,250	25	38	0	36	0	38	0	42	0	8,716	3,581	0	2,972.29
32+75.00	3,275	25	39	0	1	0	36	0	17	0	8,763	3,601	0	2,988.25
33+00.00	3,300	25	27	0	0	0	31	0	1	0	8,804	3,601	0	3,018.12
33+25.00	3,325	25	10	0	20	0	17	0	10	0	8,827	3,612	0	3,024.22
33+50.00	3,350	25	7	0	27	0	8	0	22	0	8,837	3,638	0	3,006.88
33+75.00	3,375	25	5	0	35	0	5		29	0	8,845	3,671	0	2,979.46
						TOTAL	6,650	0	3,192	0				

1) Common Excavation is the sum of the Cut and EBS Excavation columns.
2) Salvaged/Unusable Pavement Material is included in Cut.
3) Available Material = Cut - Salvaged/Unusable Pavement Material.
4) Mass Ordinate = [Cut - (Fill * Fill Factor)]

NEUBERT ROAD @ CTH CB

STATION	Real Station	Distance	AREA (SF)				Incremental Vol (CY) (Unadjusted)				Cumulative Vol (CY)			
			Cut	Salvaged/Unusable Pavement Material	Fill	Rock Exc	Cut Note 1	Salvaged/Unusable Pavement Material Note 2	Fill Note 3	Rock Exc	Cut 1.33 Note 1	Expanded Fill 1.15	Expanded Rock 1.10	Mass Ordinate Note 4
0+00.00	0		0	0	0	0								
0+25.00	25	25	1	0	10	0	1	0	5	0	1	5	0	-4.59
0+39.00	39	14	2	0	51	0	1	0	16	0	2	23	0	-21.59
0+50.00	50	11	1	0	79	0	1	0	26	0	3	53	0	-51.19
0+75.00	75	25	1	0	78	0	1	0	73	0	4	137	0	-133.70
0+88.00	88	13	5	0	85	0	2	0	39	0	6	182	0	-177.37
0+88.01	88	0	0	0	0	0	0	0	0	0	6	182	0	-177.39
1+78.99	179	91	0	0	0	0	0	0	0	0	6	182	0	-177.39
1+79.00	179	0	61	0	24	0	0	0	0	0	7	182	0	-177.38
2+00.00	200	21	47	0	24	0	42	0	19	0	62	204	0	-156.93
2+10.00	210	10	54	0	24	0	19	0	9	0	87	214	0	-148.39
2+25.00	225	15	57	0	14	0	31	0	11	0	128	226	0	-129.75
2+33.00	233	8	43	0	13	0	15	0	4	0	148	231	0	-119.52
2+50.00	250	17	31	0	0	0	23	0	4	0	179	236	0	-100.92
2+75.00	275	25	0	0	0	0	14	0	0	0	198	236	0	-86.61
3+00.00	300	25	0	0	0	0	0	0	0	0	198	236	0	-86.61
3+25.00	325	25	0	0	0	0	0	0	0	0	198	236	0	-86.61
3+50.00	350	25	0	0	0	0	0	0	0	0	198	236	0	-86.61
3+75.00	375	25	0	0	0	0	0	0	0	0	198	236	0	-86.61
4+00.00	400	25	0	0	0	0	0		0	0	198	236	0	-86.61
							TOTAL	149	0	205	0			

1) Common Excavation is the sum of the Cut and EBS Excavation columns.
2) Salvaged/Unusable Pavement Material is included in Cut.
3) Available Material = Cut - Salvaged/Unusable Pavement Material.
4) Mass Ordinate = [Cut - (Fill * Fill Factor)]

STH 15 & CTH CB CIRCULATORY ROADWAY

STATION	Real Station	Distance	AREA (SF)				Incremental Vol (CY) (Unadjusted)				Cumulative Vol (CY)			
			Cut	Salvaged/Unusable Pavement Material	Fill	Rock Exc	Cut Note 1	Salvaged/Unusable Pavement Material Note 2	Fill Note 3	Rock Exc	Cut 1.33 Note 1	Expanded Fill 1.15	Expanded Rock 1.10	Mass Ordinate Note 4
75+00.00	7,500		53	53	87	0								
75+25.00	7,525	25	53	53	43	0	49	49	60	0	66	69	0	-69.29
75+50.00	7,550	25	53	53	49	0	49	49	43	0	131	119	0	-118.51
75+75.00	7,575	25	125	53	47	0	82	49	45	0	241	170	0	-136.68
76+00.00	7,600	25	112	53	19	0	110	49	31	0	387	205	0	-111.52
76+25.00	7,625	25	108	53	0	0	102	49	9	0	522	215	0	-69.13
76+50.00	7,650	25	108	53	14	0	100	49	6	0	655	222	0	-25.86
76+75.00	7,675	25	61	53	4	0	78	49	8	0	759	232	0	-6.53
77+00.00	7,700	25	53	53	0	0	53	49	2	0	830	234	0	-5.29
77+25.00	7,725	25	53	53	37	0	49	49	17	0	895	253	0	-24.72
77+50.00	7,750	25	53	53	169	0	49	49	95	0	961	363	0	-134.19
77+75.00	7,775	25	53	53	160	0	49	49	152	0	1,027	538	0	-309.38
78+00.00	7,800	25	53	53	82	0	49	49	112	0	1,092	666	0	-437.94
78+25.00	7,825	25	53	53	167	0	49	49	115	0	1,158	799	0	-570.06
78+50.00	7,850	25	53	53	236	0	49	49	187	0	1,224	1,013	0	-784.60
78+75.00	7,875	25	53	53	137	0	49	49	173	0	1,289	1,212	0	-983.60
CENTRAL ISLAND			53	53		0	0		1,905	0	1,289	3,403	0	-3,174.35
							TOTAL	970	741	2,959	0			

1) Common Excavation is the sum of the Cut and EBS Excavation columns.
2) Salvaged/Unusable Pavement Material is included in Cut.
3) Available Material = Cut - Salvaged/Unusable Pavement Material.
4) Mass Ordinate = [Cut - (Fill * Fill Factor)]

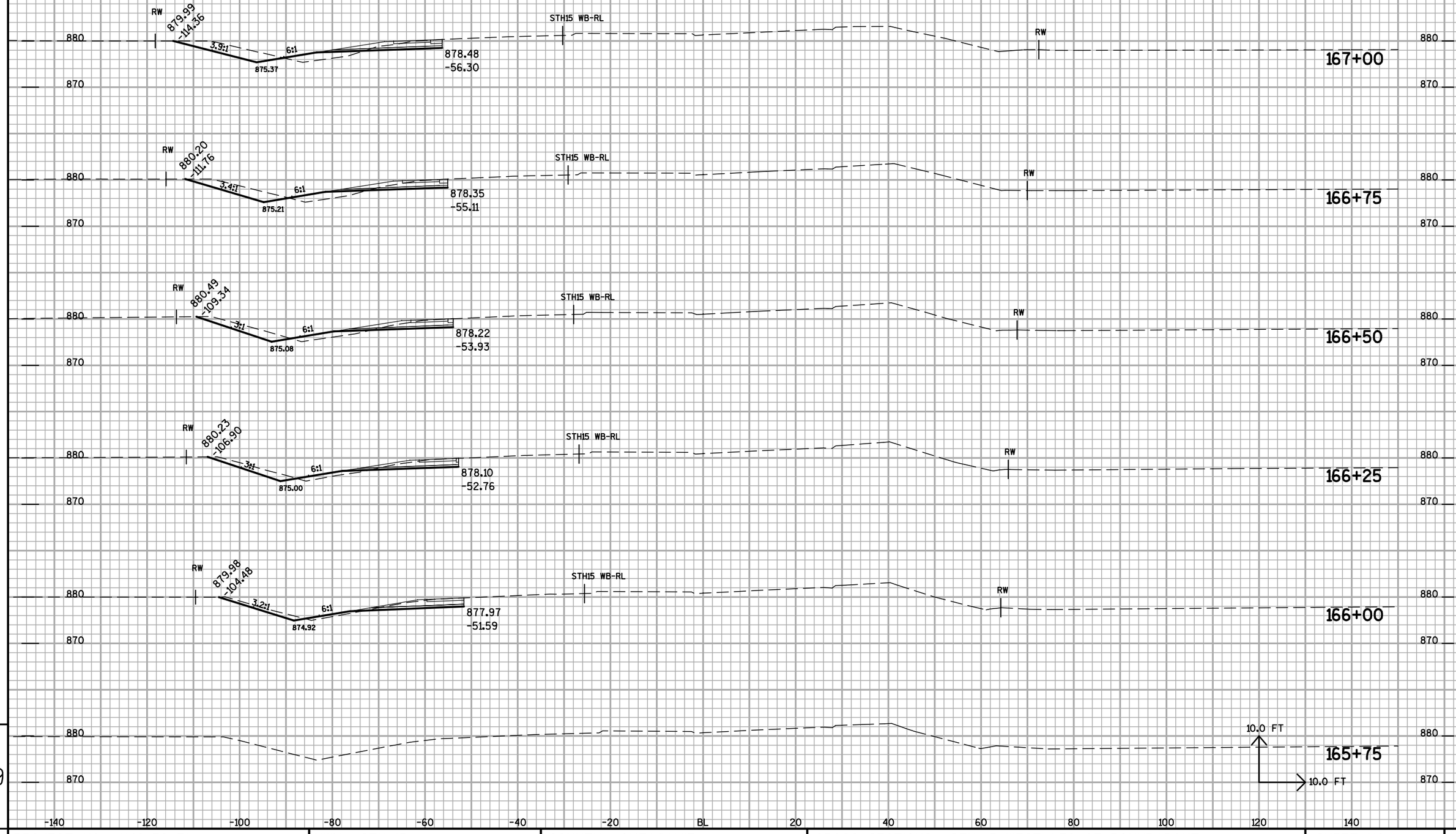

9

9

PROJECT NO: 1146-39-71	HWY: STH 15	COUNTY: OUTAGAMIE	CROSS SECTIONS STH 15 WEST LEG OF ROUNDABOUT	SHEET NO: 212	E

FILE NAME : n:±pds±projects±Outagamie±1146-39-00±PS&E FILES±X-SECTIONS±XS-STH15 WEST LEG.DGN PLOT DATE : 28-JUL-2011 08:23 PLOT BY : dotmzc PLOT NAME : PLOT SCALE : 2.000000:1.000000

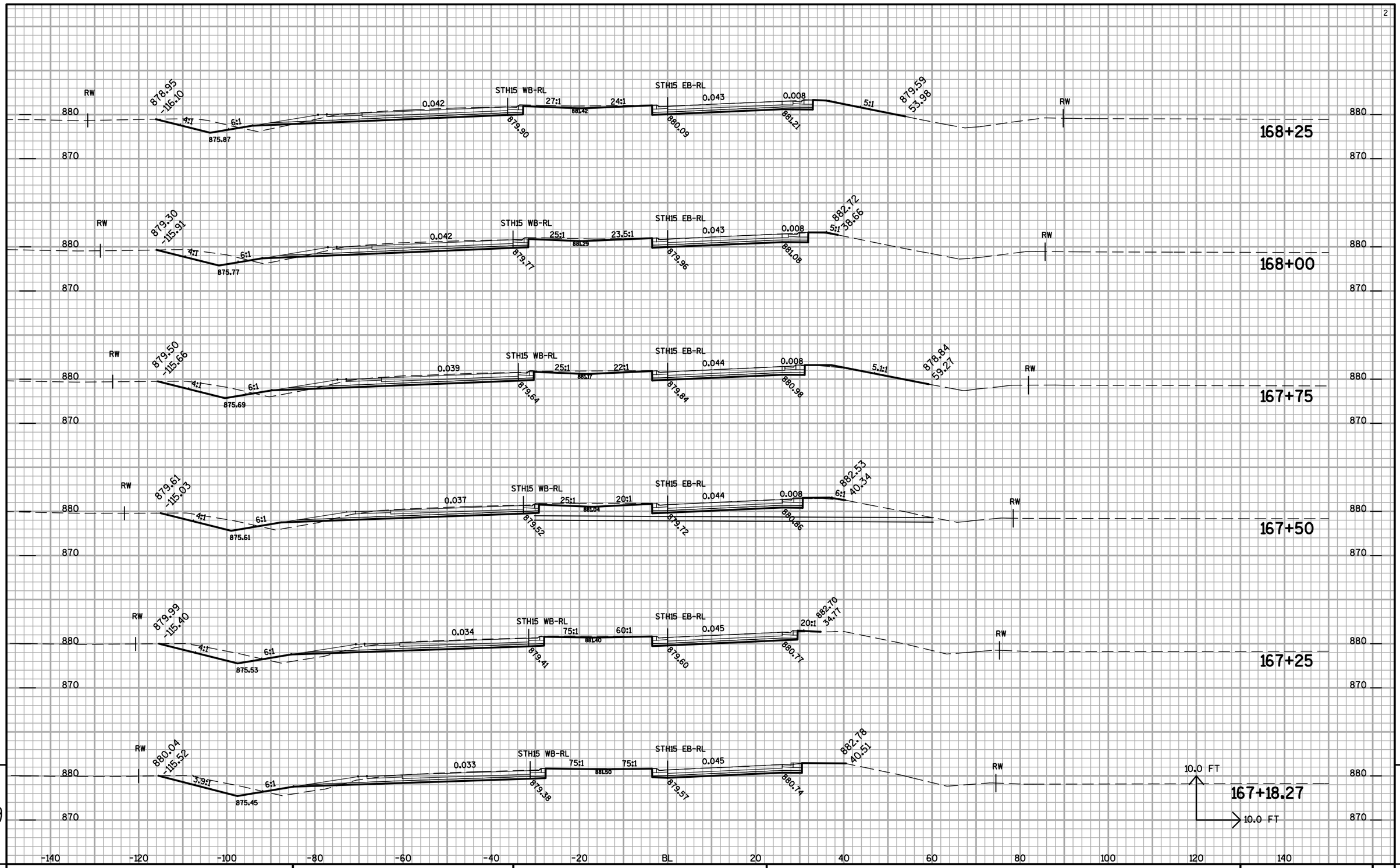

9

9

PROJECT NO: 1146-39-71	HWY: STH 15	COUNTY: OUTAGAMIE	CROSS SECTIONS STH 15 WEST LEG OF ROUNDABOUT	SHEET NO: 213	E

FILE NAME : n:±pds±projects±Outagamie±1146-39-00±PS&E FILES±X-SECTIONS±XS-STH15 WEST LEG.DGN PLOT DATE : 28-JUL-2011 08:23 PLOT BY : dotmzc PLOT NAME : PLOT SCALE : 2.000000:1.000000

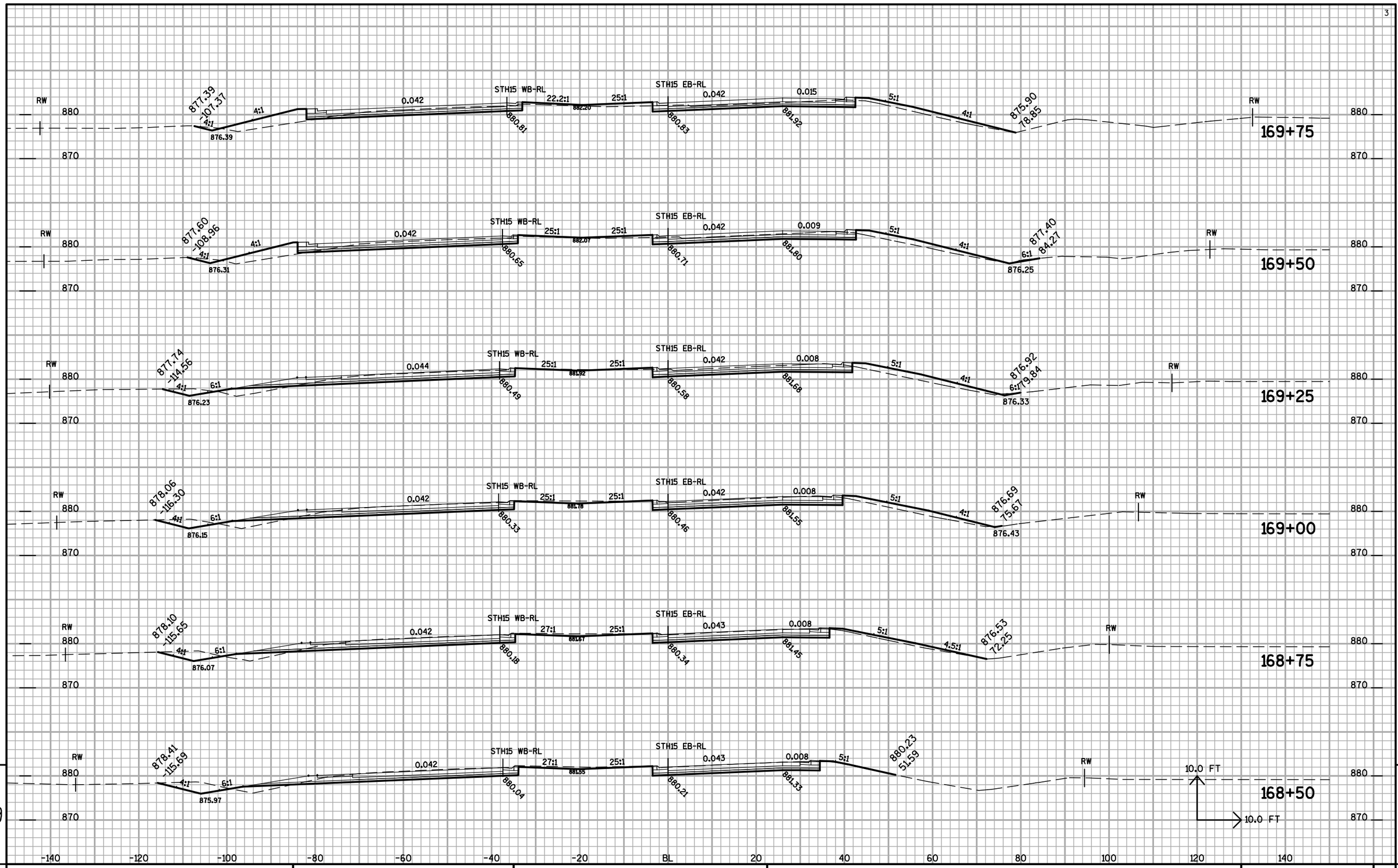

PROJECT NO: 1146-39-71	HWY: STH 15	COUNTY: OUTAGAMIE	CROSS SECTIONS STH 15 WEST LEG OF ROUNDABOUT	SHEET NO: 214 E

FILE NAME : n:±pds±projects±Outagamie±1146-39-00±PS&E FILES±X-SECTIONS±XS-STH15 WEST LEG.DGN PLOT DATE : 28-JUL-2011 08:23 PLOT BY : dotmzc PLOT NAME : PLOT SCALE : 2.000000:1.000000

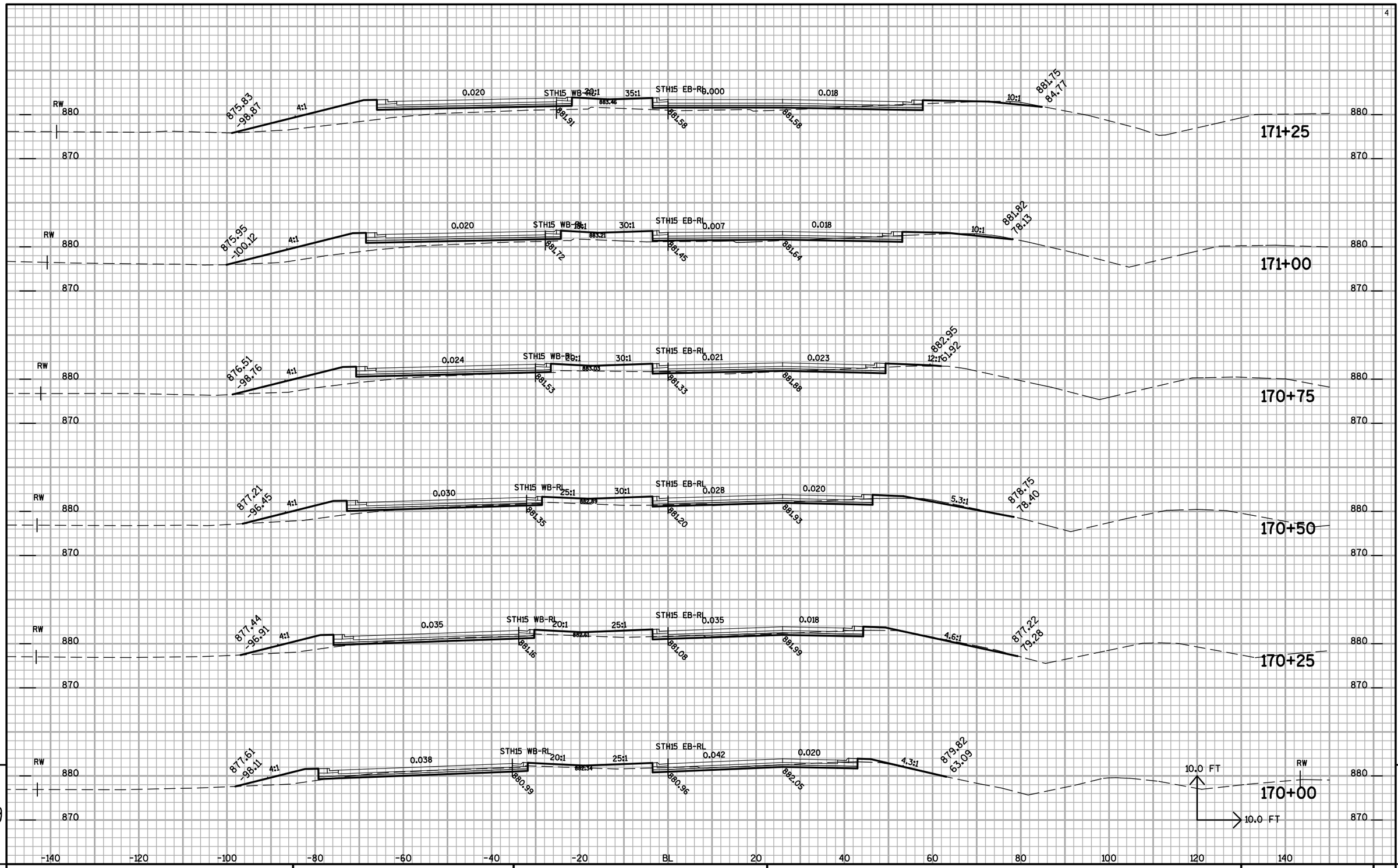

PROJECT NO: 1146-39-71	HWY: STH 15	COUNTY: OUTAGAMIE	CROSS SECTIONS STH 15 WEST LEG OF ROUNDABOUT	SHEET NO: 215 E

FILE NAME : n:±pds±projects±Outagamie±1146-39-00±PS&E FILES±X-SECTIONS±XS-STH15 WEST LEG.DGN PLOT DATE : 28-JUL-2011 08:24 PLOT BY : dotmzc PLOT NAME : PLOT SCALE : 2.000000:1.000000

9

9

PROJECT NO: 1146-39-71	HWY: STH 15	COUNTY: OUTAGAMIE	CROSS SECTIONS STH 15 WEST LEG OF ROUNDABOUT	SHEET NO: 216	E

FILE NAME : n:±pds±projects±Outagamie±1146-39-00±PS&E FILES±X-SECTIONS±XS-STH15 WEST LEG.DGN PLOT DATE : 28-JUL-2011 08:24 PLOT BY : dotmzc PLOT NAME : PLOT SCALE : 2.000000:1.000000

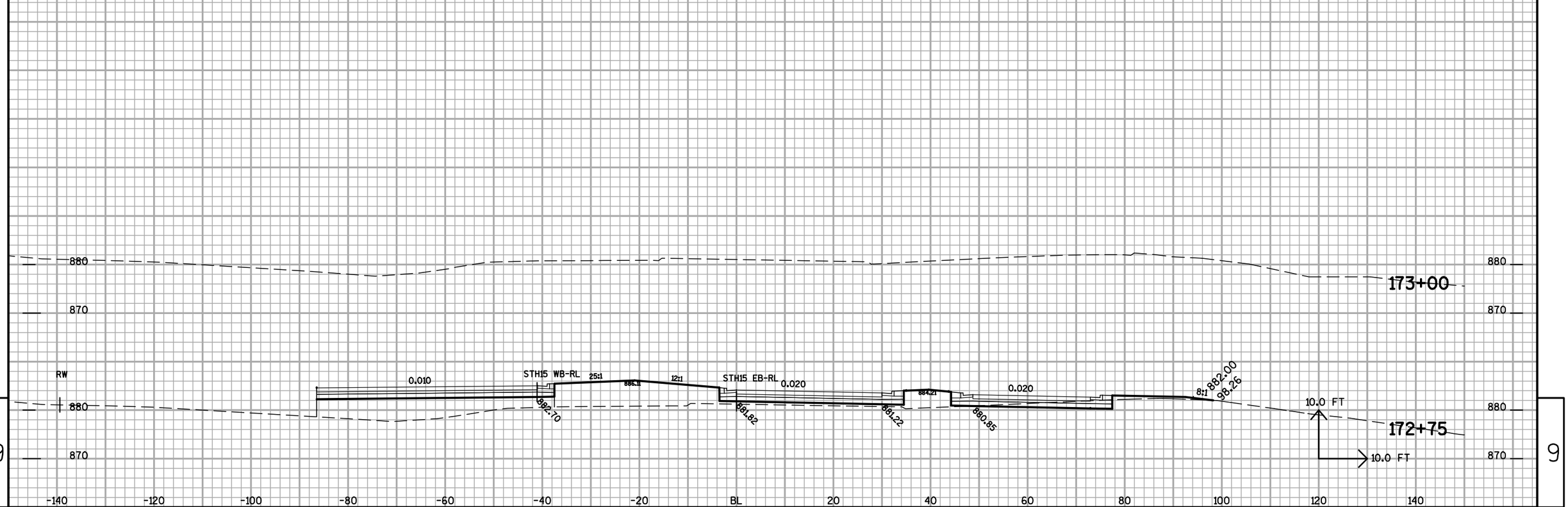

9

9

PROJECT NO: 1146-39-71	HWY: STH 15	COUNTY: OUTAGAMIE	CROSS SECTIONS STH 15 WEST LEG OF ROUNDABOUT	SHEET NO: 217	E

FILE NAME : n:±pds±projects±Outagamie±1146-39-00±PS&E FILES±X-SECTIONS±XS-STH15 WEST LEG.DGN PLOT DATE : 28-JUL-2011 08:24 PLOT BY : dotmzc PLOT NAME : PLOT SCALE : 2.000000:1.000000

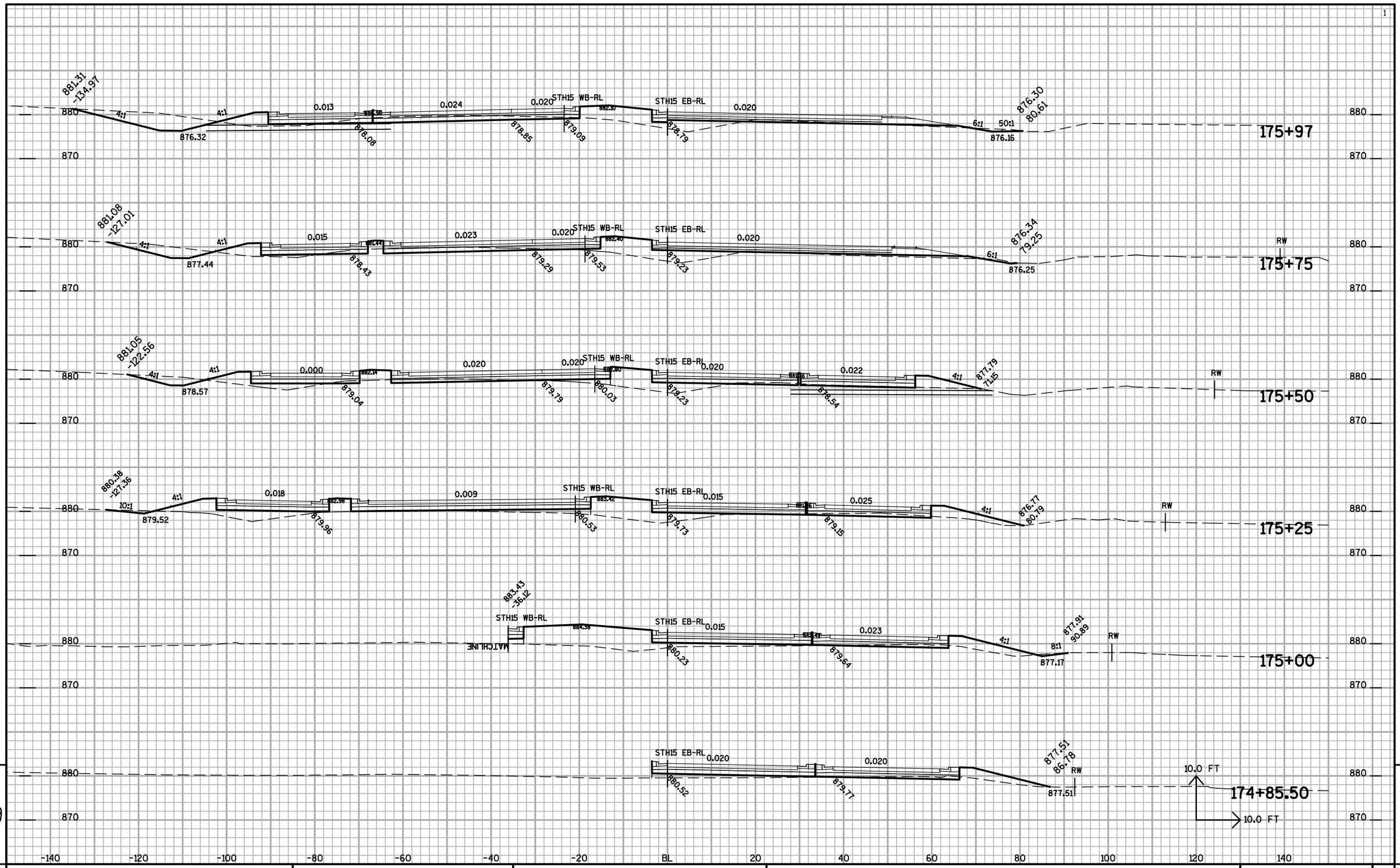

PROJECT NO: 1146-39-71	HWY: STH 15	COUNTY: OUTAGAMIE	CROSS SECTIONS STH 15 EAST LEG OF ROUNDABOUT	SHEET NO: 218 E

FILE NAME : n:±pds±projects±Outagamie±1146-39-00±PS&E FILES±X-SECTIONS±XS-STH15 EAST LEG.DGN PLOT DATE : 28-JUL-2011 08:24 PLOT BY : dotmzc PLOT NAME : PLOT SCALE : 2.000000:1.000000

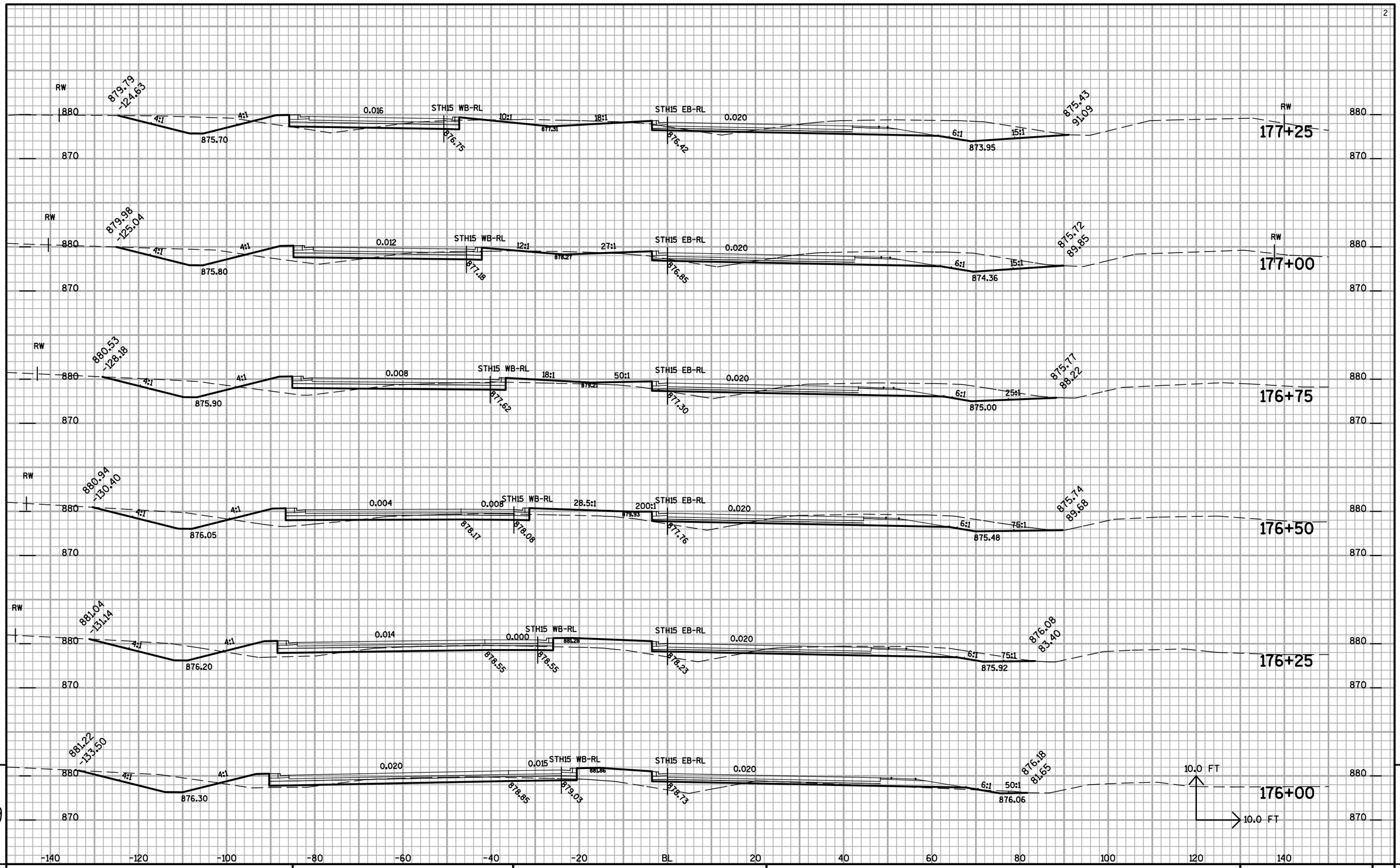

9

9

PROJECT NO: 1146-39-71	HWY: STH 15	COUNTY: OUTAGAMIE	CROSS SECTIONS STH 15 EAST LEG OF ROUNDABOUT	SHEET NO: 219	E

FILE NAME : n:±pds±projects±Outagamie±1146-39-00±PS&E FILES±X-SECTIONS±XS-STH15 EAST LEG.DGN PLOT DATE : 28-JUL-2011 08:24 PLOT BY : dotmzc PLOT NAME : PLOT SCALE : 2.000000:1.000000

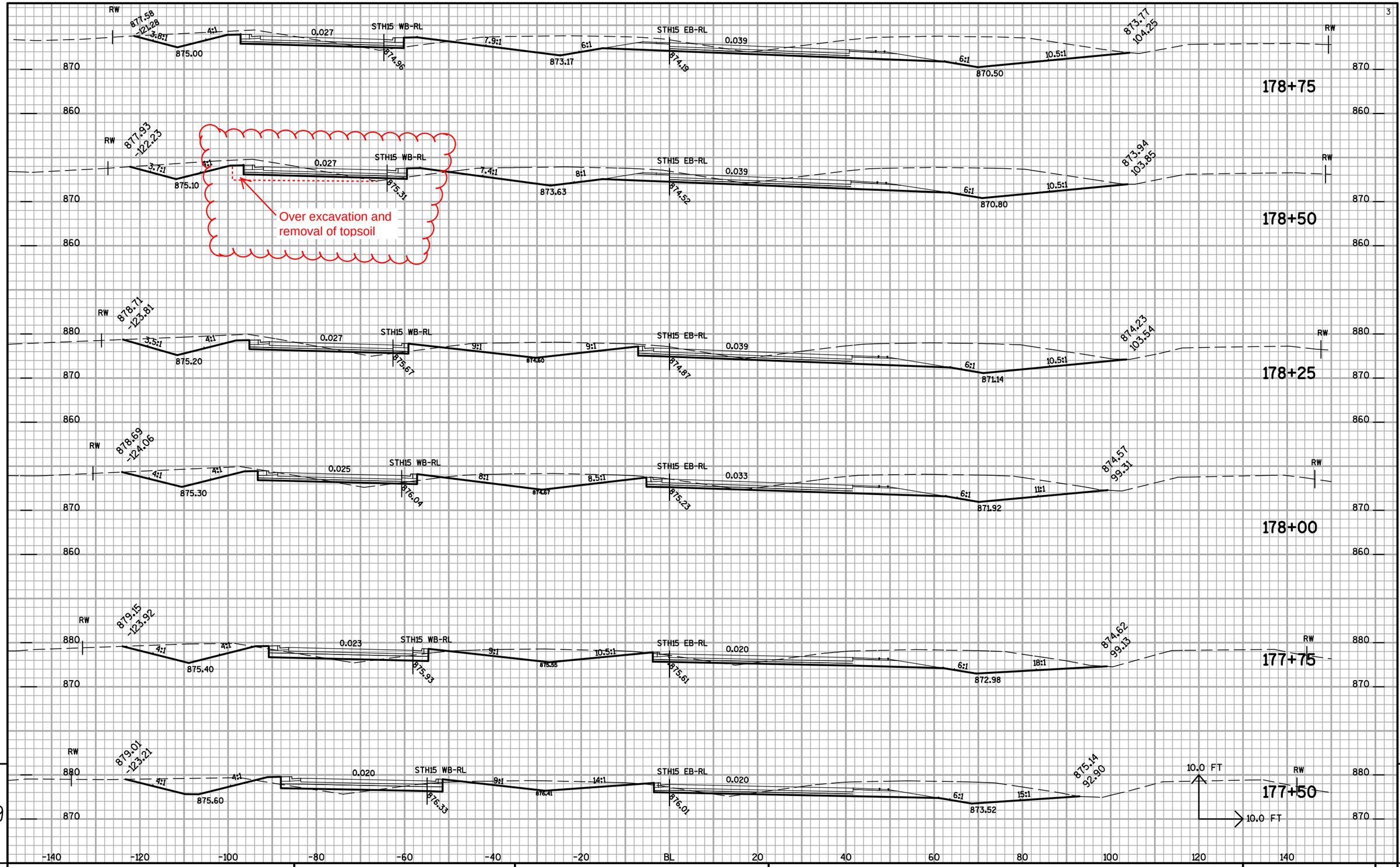

PROJECT NO: 1146-39-71	HWY: STH 15	COUNTY: OUTAGAMIE	CROSS SECTIONS STH 15 EAST LEG OF ROUNDABOUT	SHEET NO: 220 E

FILE NAME : n:±pds±projects±Outagamie±1146-39-00±PS&E FILES±X-SECTIONS±XS-STH15 EAST LEG.DGN PLOT DATE : 28-JUL-2011 08:24 PLOT BY : dotmzc PLOT NAME : PLOT SCALE : 2.000000:1.000000

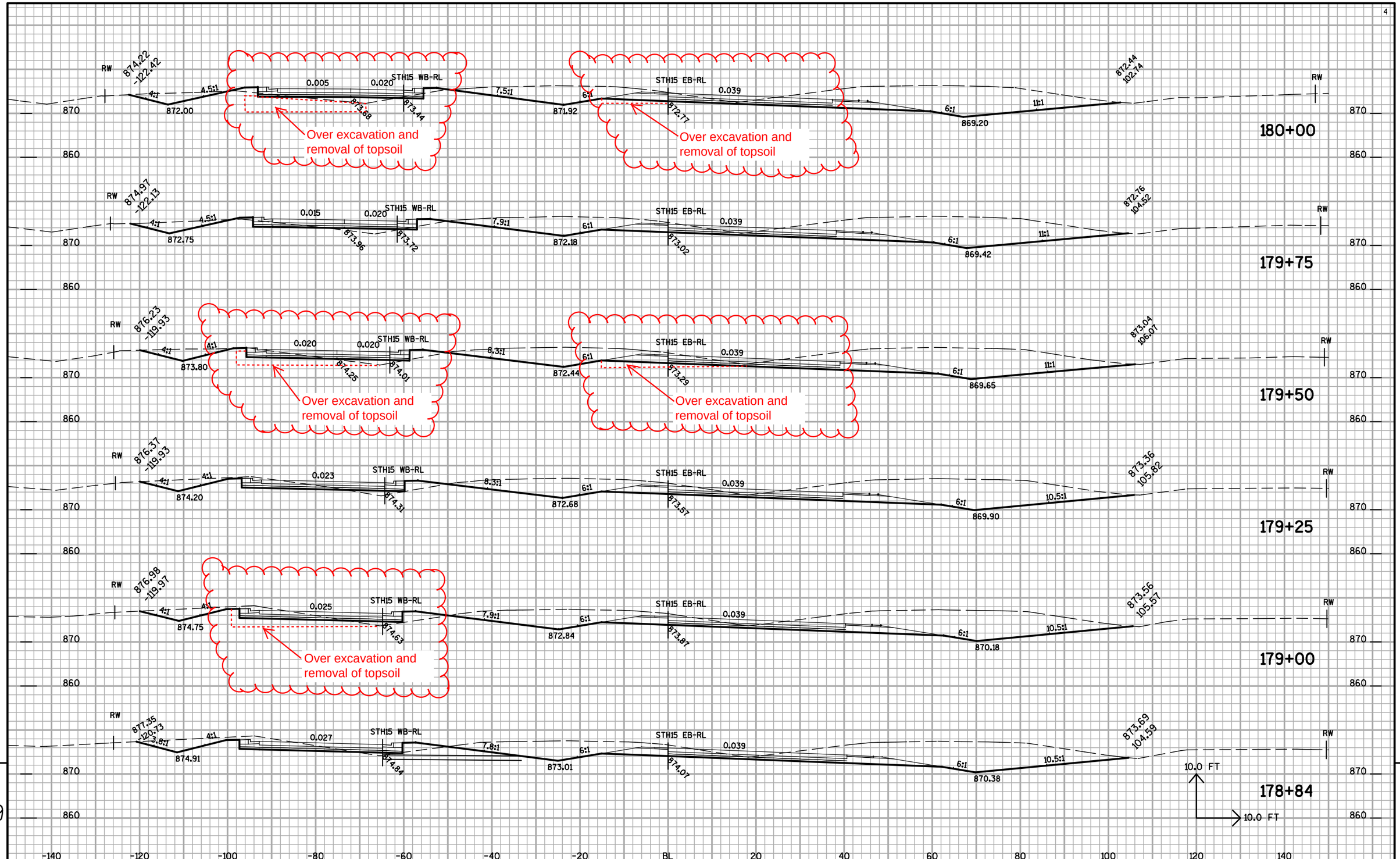

9

9

PROJECT NO: 1146-39-71	HWY: STH 15	COUNTY: OUTAGAMIE	CROSS SECTIONS STH 15 EAST LEG OF ROUNDABOUT	SHEET NO: 221	E

FILE NAME : n:±pds±projects±Outagamie±1146-39-00±PS&E FILES±X-SECTIONS±XS-STH15 EAST LEG.DGN PLOT DATE : 28-JUL-2011 08:24 PLOT BY : dotmzc PLOT NAME : PLOT SCALE : 2.000000:1.000000

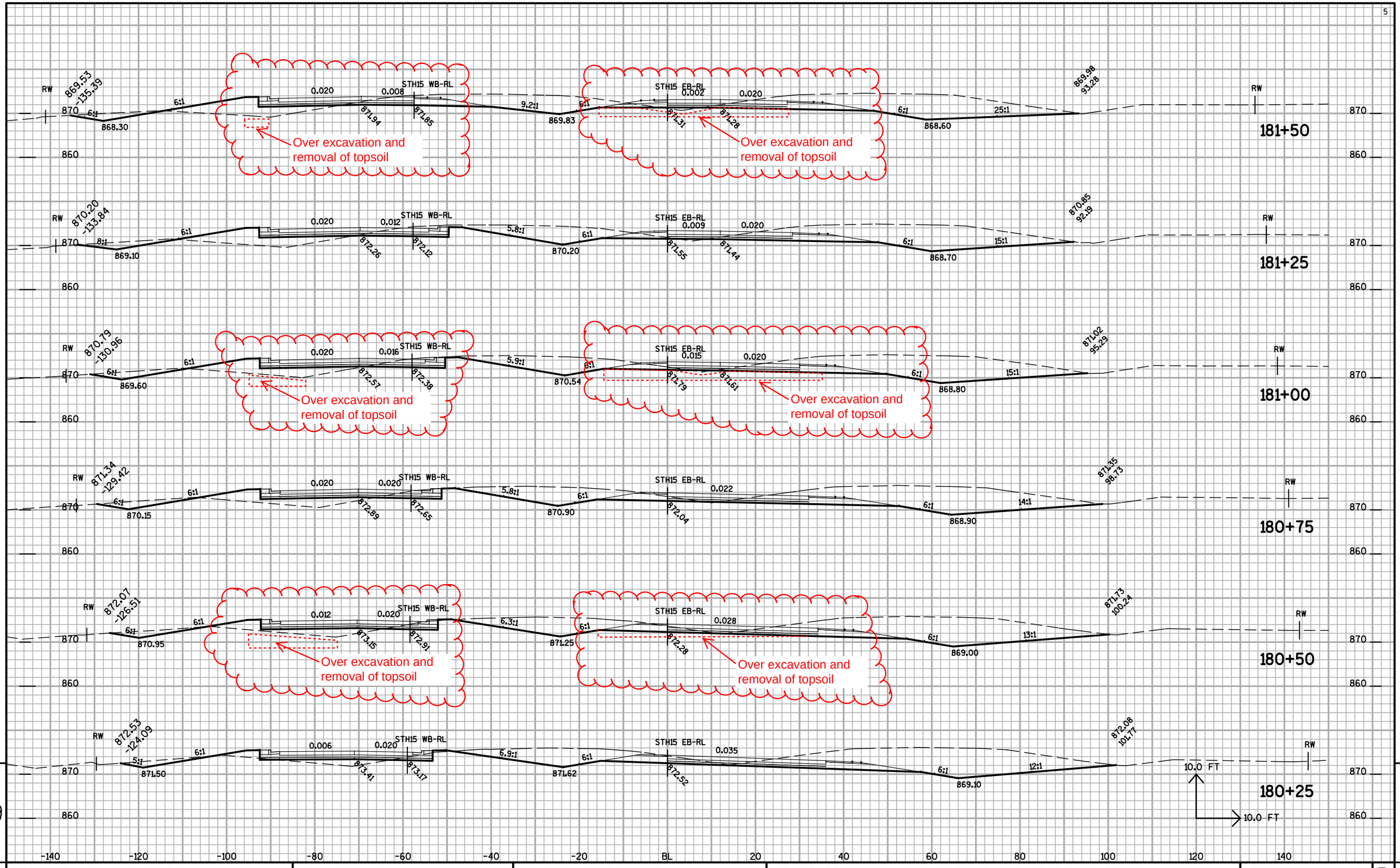

9

9

PROJECT NO: 1146-39-71	HWY: STH 15	COUNTY: OUTAGAMIE	CROSS SECTIONS STH 15 EAST LEG OF ROUNDABOUT	SHEET NO: 222	E

FILE NAME : n:±pds±projects±Outagamie±1146-39-00±PS&E FILES±X-SECTIONS±XS-STH15 EAST LEG.DGN PLOT DATE : 28-JUL-2011 08:24 PLOT BY : dotmzc PLOT NAME : PLOT SCALE : 2.000000:1.000000

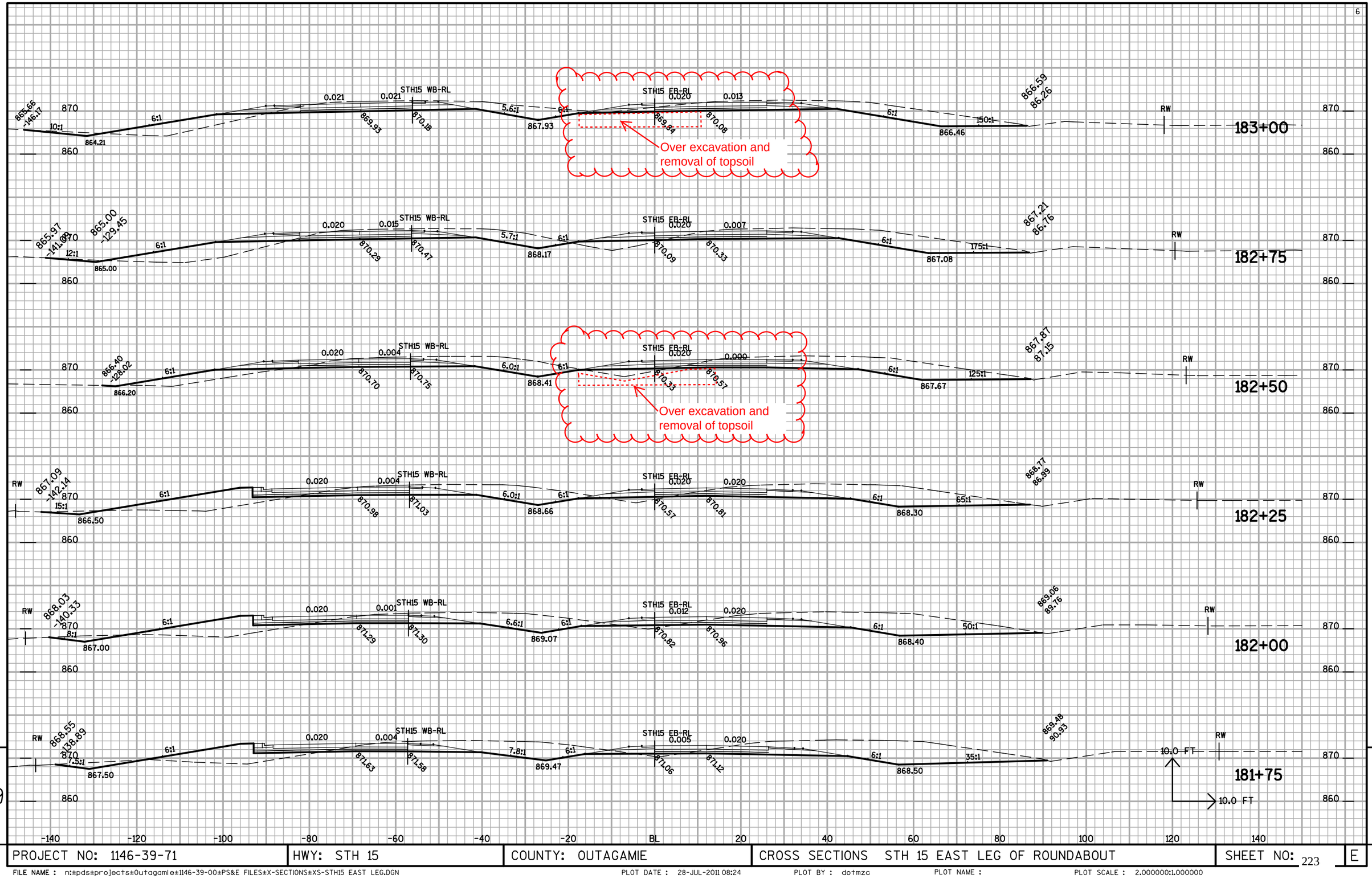

PROJECT NO: 1146-39-71	HWY: STH 15	COUNTY: OUTAGAMIE	CROSS SECTIONS STH 15 EAST LEG OF ROUNDABOUT	SHEET NO: 223 E

FILE NAME : n:±pds±projects±Outagamie±1146-39-00±PS&E FILES±X-SECTIONS±XS-STH15 EAST LEG.DGN PLOT DATE : 28-JUL-2011 08:24 PLOT BY : dotmzc PLOT NAME : PLOT SCALE : 2.000000:1.000000

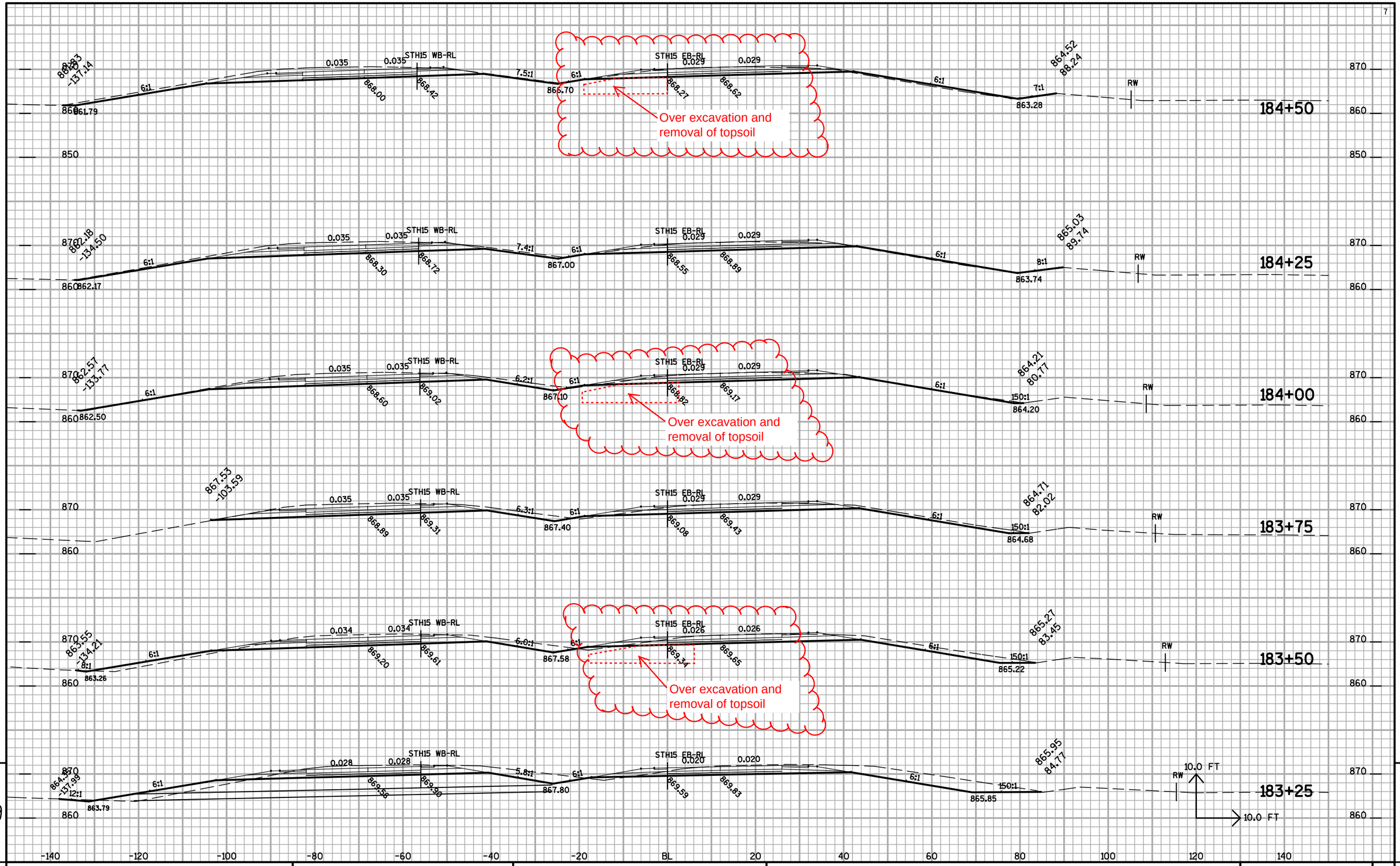

PROJECT NO: 1146-39-71	HWY: STH 15	COUNTY: OUTAGAMIE	CROSS SECTIONS STH 15 EAST LEG OF ROUNDABOUT	SHEET NO: 224 E

FILE NAME : n:±pds±projects±Outagamie±1146-39-00±PS&E FILES±X-SECTIONS±XS-STH15 EAST LEG.DGN PLOT DATE : 28-JUL-2011 08:24 PLOT BY : dotmzc PLOT NAME : PLOT SCALE : 2.000000:1.000000

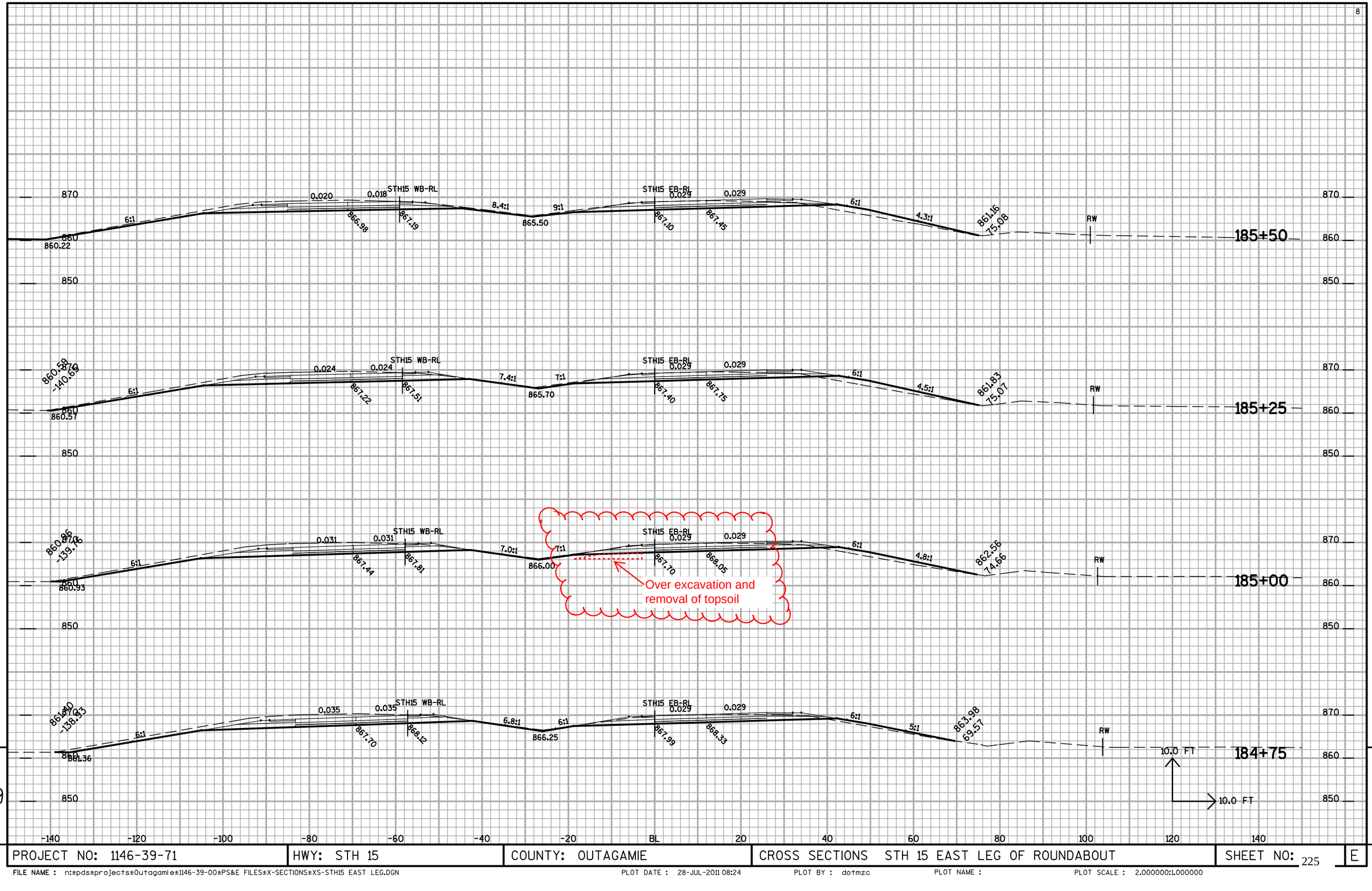

PROJECT NO: 1146-39-71	HWY: STH 15	COUNTY: OUTAGAMIE	CROSS SECTIONS STH 15 EAST LEG OF ROUNDABOUT	SHEET NO: 225 E

FILE NAME : n:±pds±projects±Outagamie±1146-39-00±PS&E FILES±X-SECTIONS±XS-STH15 EAST LEG.DGN PLOT DATE : 28-JUL-2011 08:24 PLOT BY : dotmzc PLOT NAME : PLOT SCALE : 2.000000:1.000000

PROJECT NO: 1146-39-71	HWY: STH 15	COUNTY: OUTAGAMIE	CROSS SECTIONS STH 15 EAST LEG OF ROUNDABOUT	SHEET NO: 226 E

FILE NAME : n:±pds±projects±Outagamie±1146-39-00±PS&E FILES±X-SECTIONS±XS-STH15 EAST LEG.DGN PLOT DATE : 28-JUL-2011 08:24 PLOT BY : dotmzc PLOT NAME : PLOT SCALE : 2.000000:1.000000

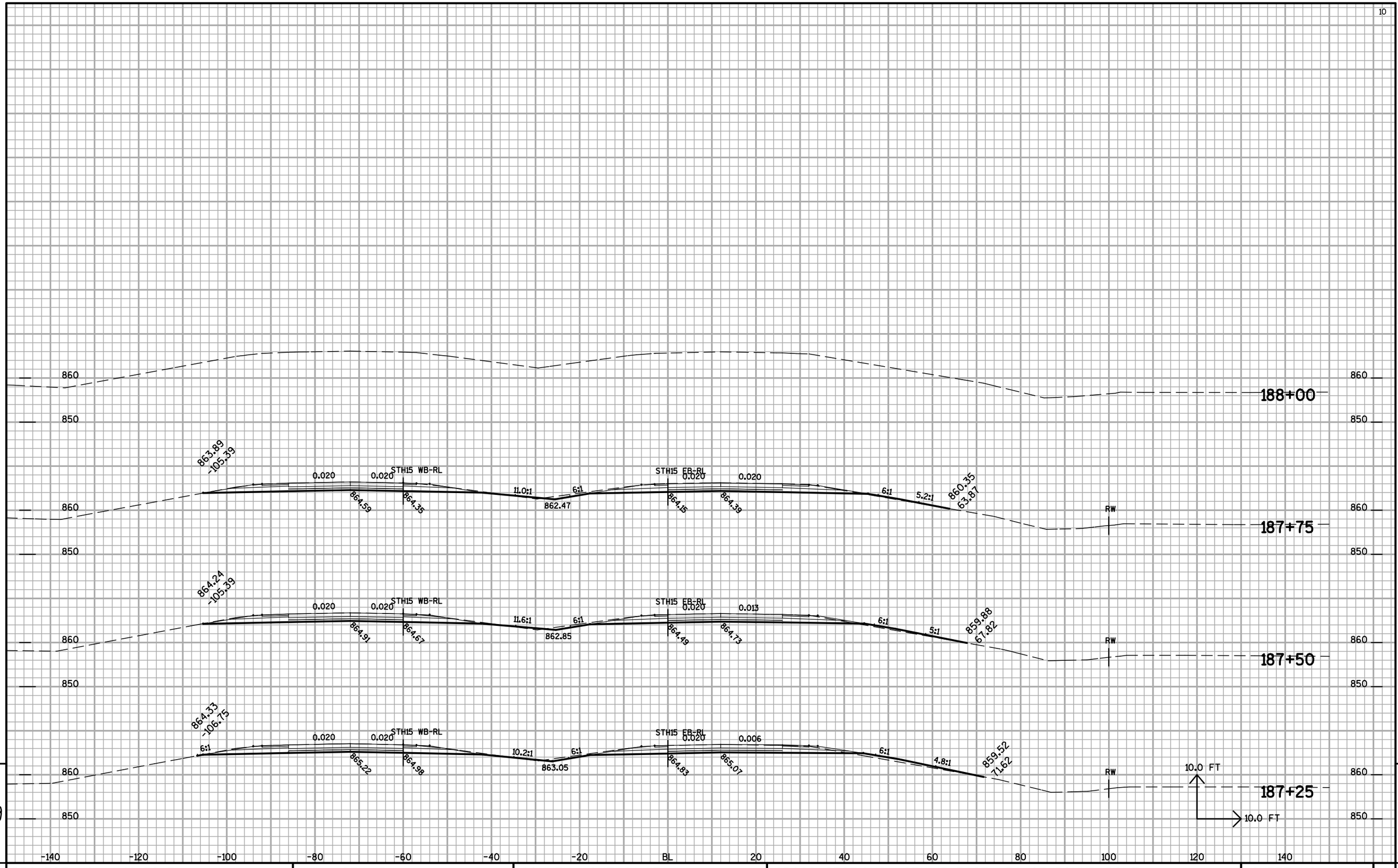

9

9

PROJECT NO: 1146-39-71	HWY: STH 15	COUNTY: OUTAGAMIE	CROSS SECTIONS STH 15 EAST LEG OF ROUNDABOUT	SHEET NO: 227	E

FILE NAME : n:±pds±projects±Outagamie±1146-39-00±PS&E FILES±X-SECTIONS±XS-STH15 EAST LEG.DGN PLOT DATE : 28-JUL-2011 08:24 PLOT BY : dotmzc PLOT NAME : PLOT SCALE : 2.000000:1.000000

PROJECT NO: 1146-39-71	HWY: STH 15	COUNTY: OUTAGAMIE	CROSS SECTIONS CTH CB SOUTH LEG OF ROUNDABOUT	SHEET NO: 228 E

FILE NAME : n:±pds±projects±Outagamie±1146-39-00±PS&E FILES±X-SECTIONS±XS-CTHCB SOUTH LEG.DGN PLOT DATE : 28-JUL-2011 08:24 PLOT BY : dotmzc PLOT NAME : PLOT SCALE : 2.000000:1.000000

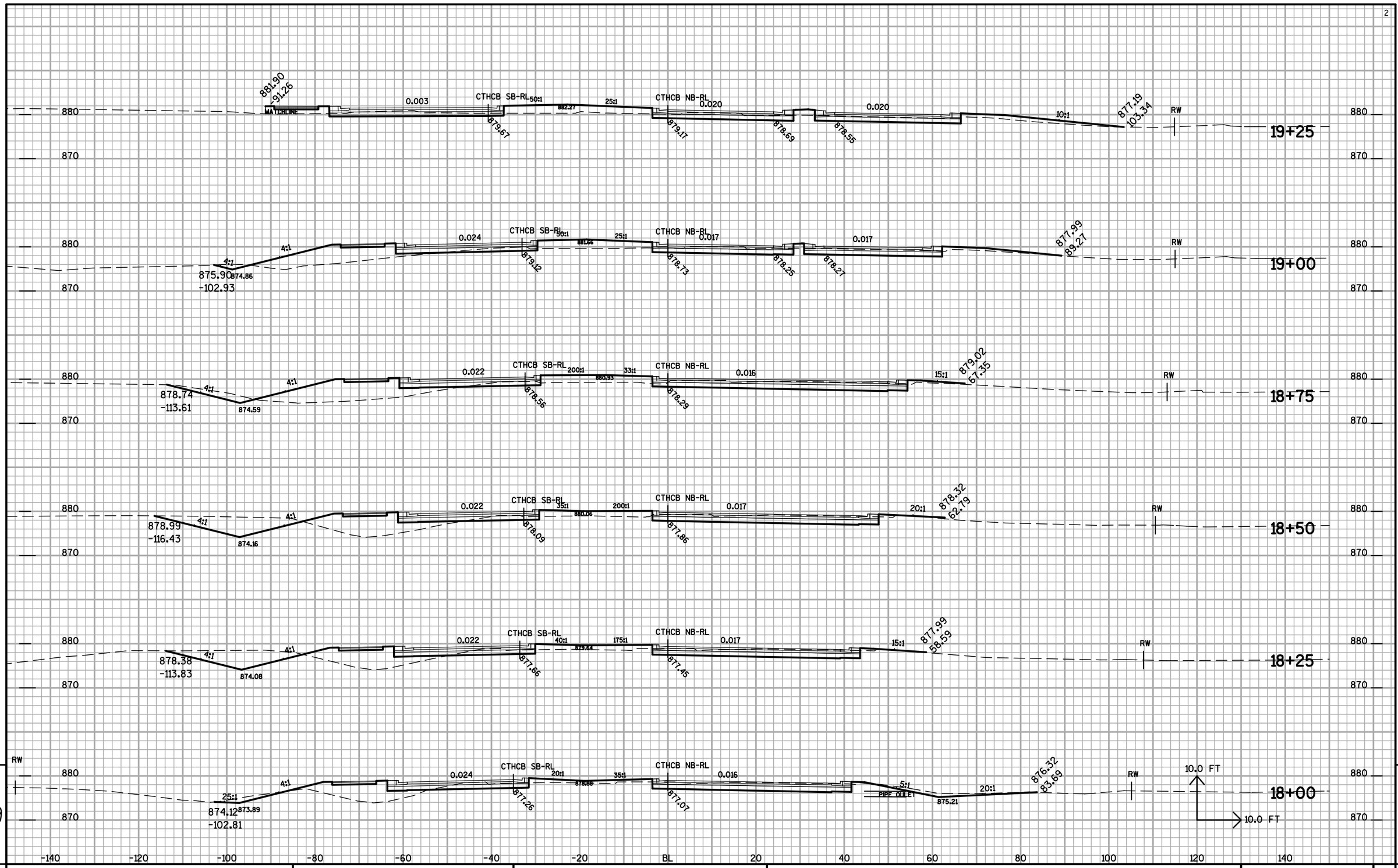

PROJECT NO: 1146-39-71	HWY: STH 15	COUNTY: OUTAGAMIE	CROSS SECTIONS CTH CB SOUTH LEG OF ROUNDABOUT	SHEET NO: 229 E

FILE NAME : n:±pds±projects±Outagamie±1146-39-00±PS&E FILES±X-SECTIONS±XS-CTHCB SOUTH LEG.DGN PLOT DATE : 28-JUL-2011 08:24 PLOT BY : dotmzc PLOT NAME : PLOT SCALE : 2.000000:1.000000

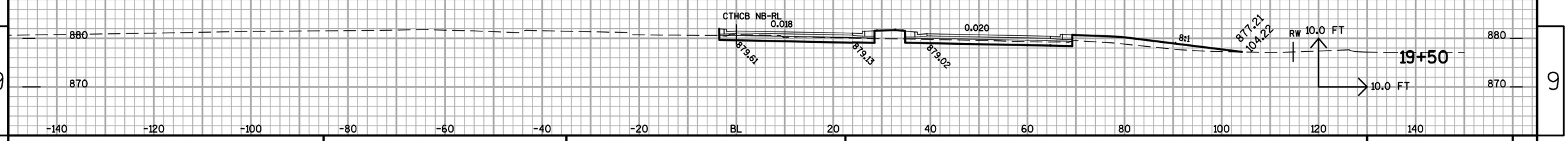

9

9

PROJECT NO: 1146-39-71	HWY: STH 15	COUNTY: OUTAGAMIE	CROSS SECTIONS CTH CB SOUTH LEG OF ROUNDABOUT	SHEET NO: 230	E

FILE NAME : n:±pds±projects±Outagamie±1146-39-00±PS&E FILES±X-SECTIONS±XS-CTHCB SOUTH LEG.DGN PLOT DATE : 28-JUL-2011 08:24 PLOT BY : dotmzc PLOT NAME : PLOT SCALE : 2.000000:1.000000

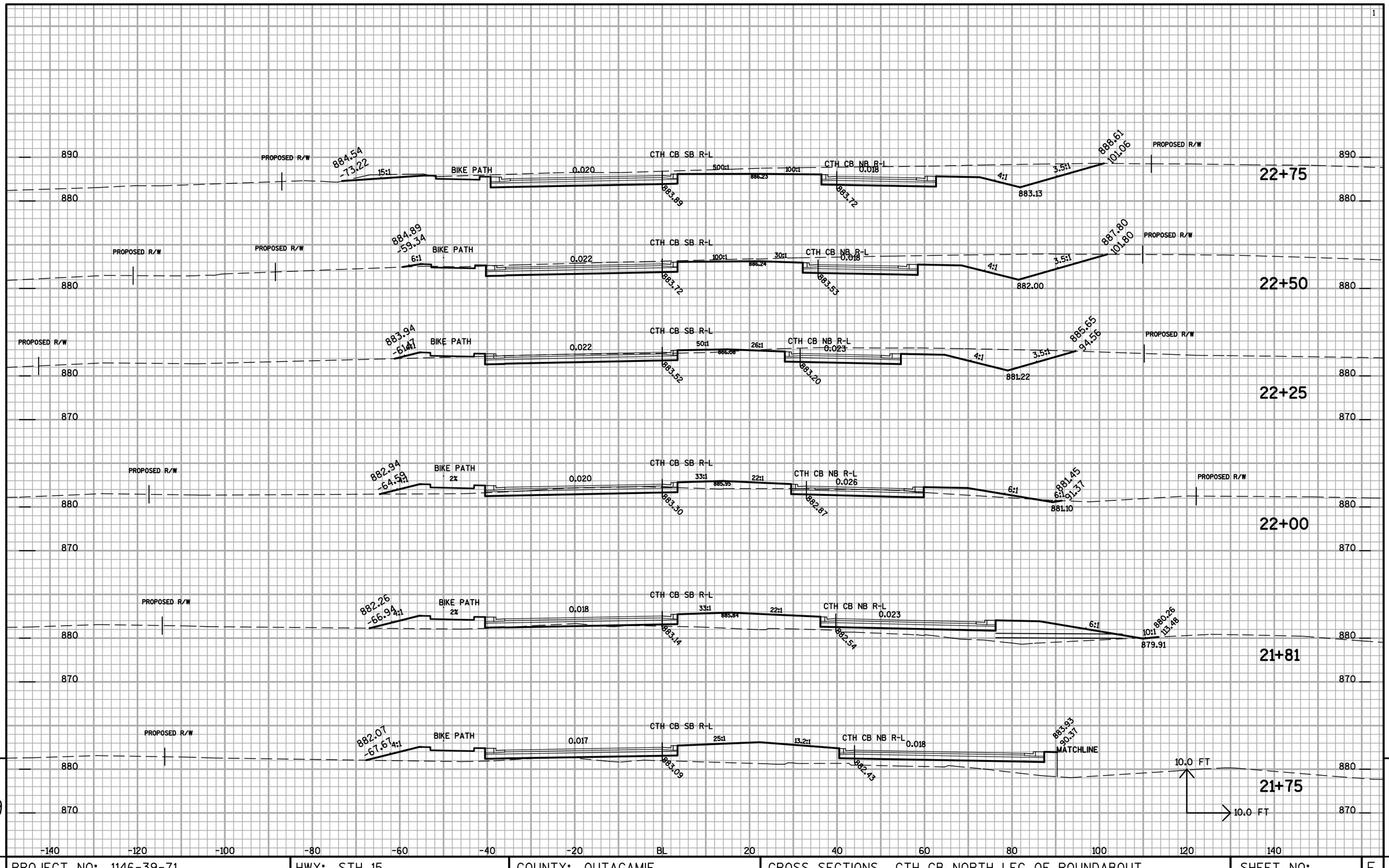

PROJECT NO: 1146-39-71	HWY: STH 15	COUNTY: OUTAGAMIE	CROSS SECTIONS CTH CB NORTH LEG OF ROUNDABOUT	SHEET NO: 231 E

FILE NAME : n:±pds±projects±Outagamie±1146-39-00±PS&E FILES±X-SECTIONS±XS-CTHCB NORTH LEG.DGN PLOT DATE : 28-JUL-2011 08:25 PLOT BY : dotmzc PLOT NAME : PLOT SCALE : 2.000000:1.000000

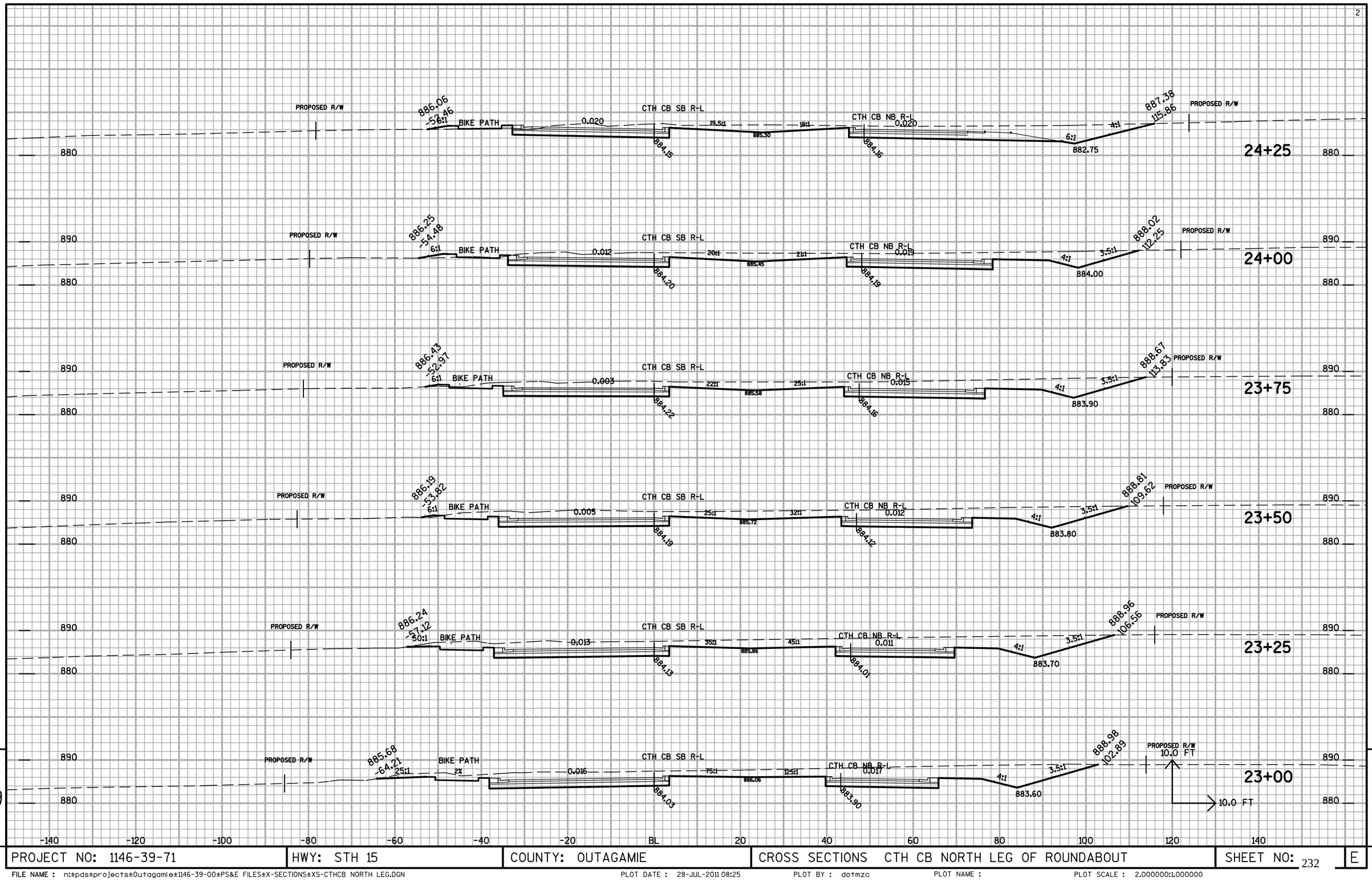

PROJECT NO: 1146-39-71	HWY: STH 15	COUNTY: OUTAGAMIE	CROSS SECTIONS CTH CB NORTH LEG OF ROUNDABOUT	SHEET NO: 232 E

FILE NAME : n:±pds±projects±Outagamie±1146-39-00±PS&E FILES±X-SECTIONS±XS-CTHCB NORTH LEG.DGN PLOT DATE : 28-JUL-2011 08:25 PLOT BY : dotmzc PLOT NAME : PLOT SCALE : 2.000000:1.000000

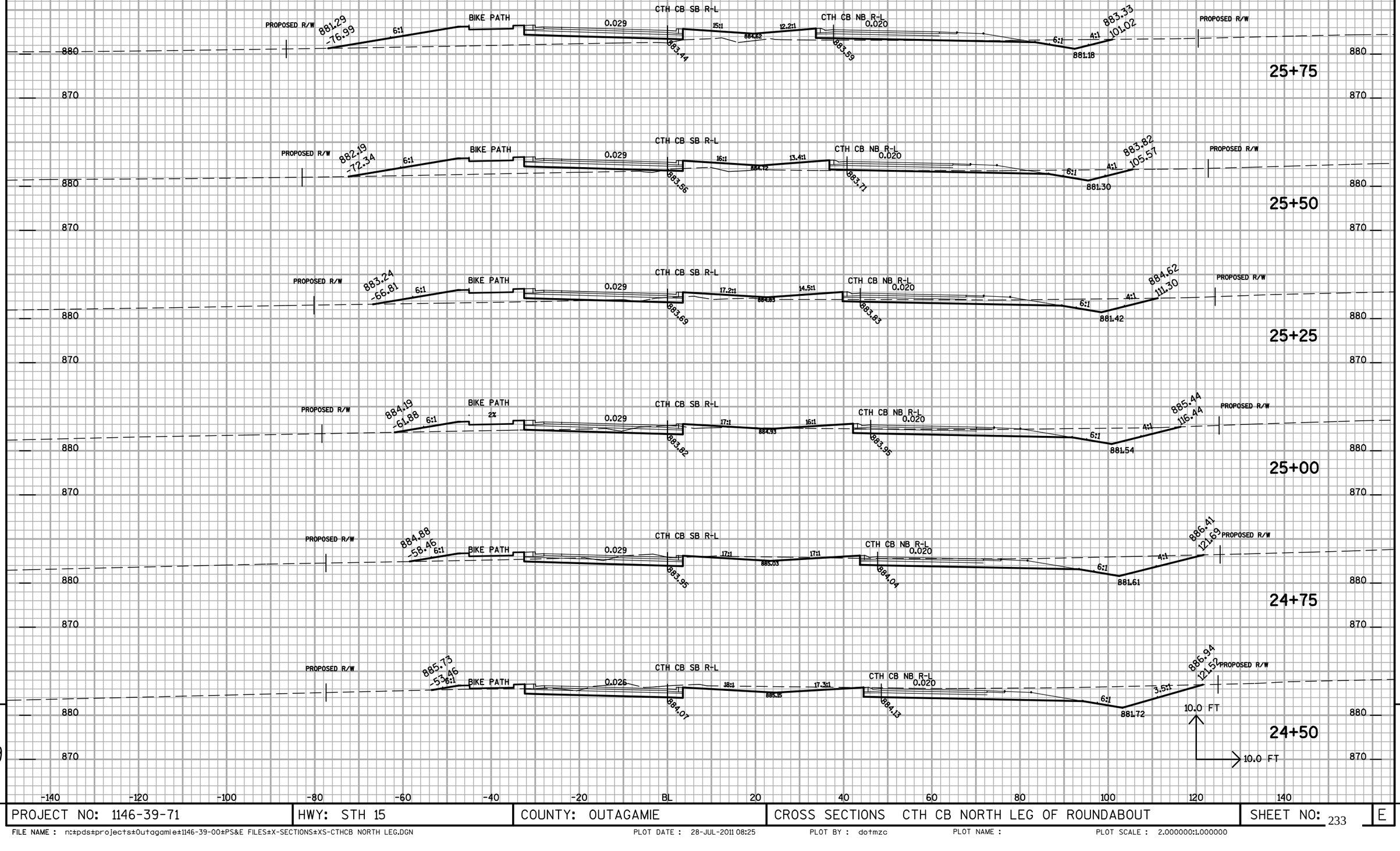

9

9

PROJECT NO: 1146-39-71	HWY: STH 15	COUNTY: OUTAGAMIE	CROSS SECTIONS CTH CB NORTH LEG OF ROUNDABOUT	SHEET NO: 233	E

FILE NAME : n:±pds±projects±Outagamie±1146-39-00±PS&E FILES±X-SECTIONS±XS-CTHCB NORTH LEG.DGN PLOT DATE : 28-JUL-2011 08:25 PLOT BY : dotmzc PLOT NAME : PLOT SCALE : 2.000000:1.000000

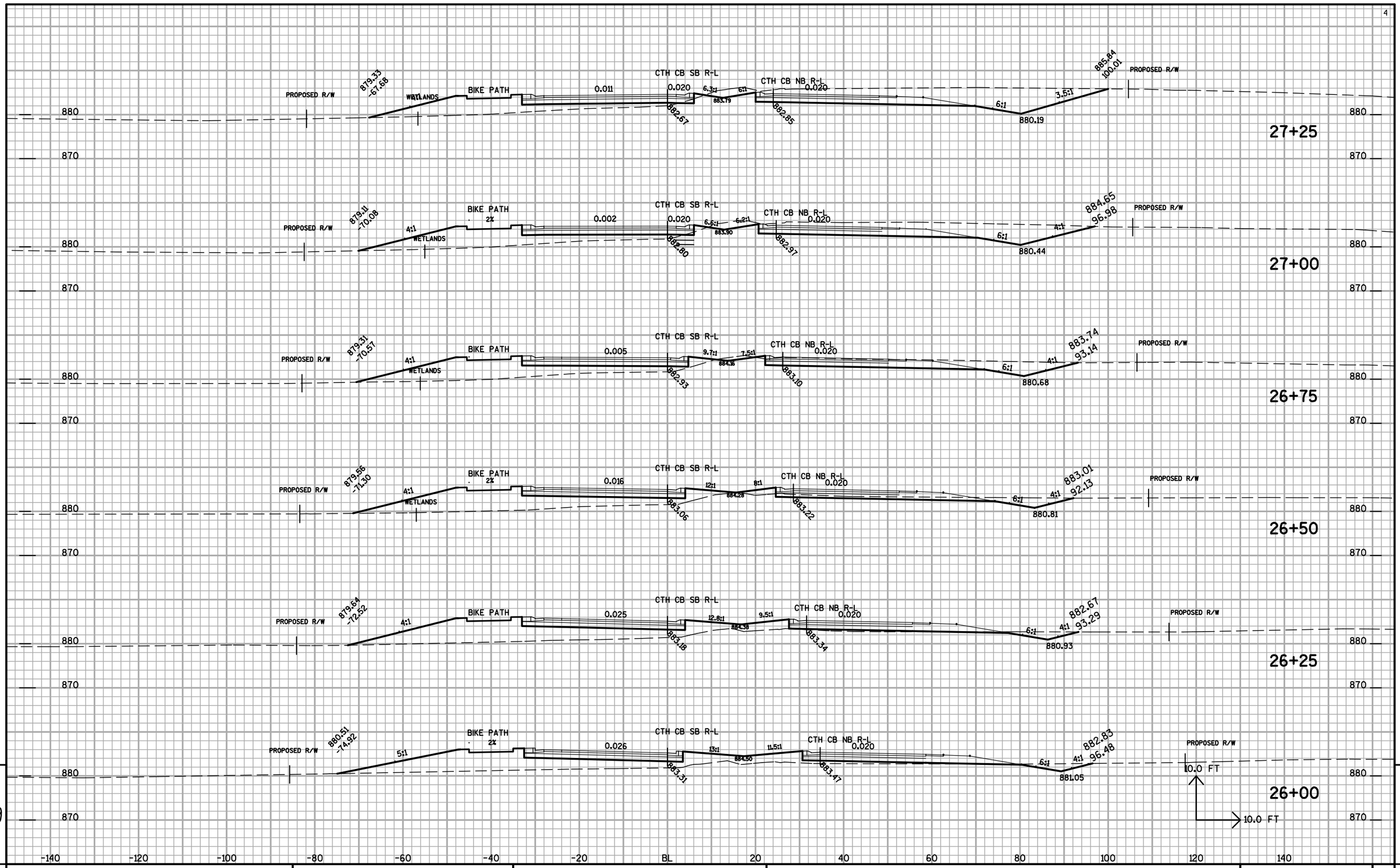

9

9

PROJECT NO: 1146-39-71	HWY: STH 15	COUNTY: OUTAGAMIE	CROSS SECTIONS CTH CB NORTH LEG OF ROUNDABOUT	SHEET NO: 234	E

FILE NAME : n:±pds±projects±Outagamie±1146-39-00±PS&E FILES±X-SECTIONS±XS-CTHCB NORTH LEG.DGN PLOT DATE : 28-JUL-2011 08:25 PLOT BY : dotmzc PLOT NAME : PLOT SCALE : 2.000000:1.000000

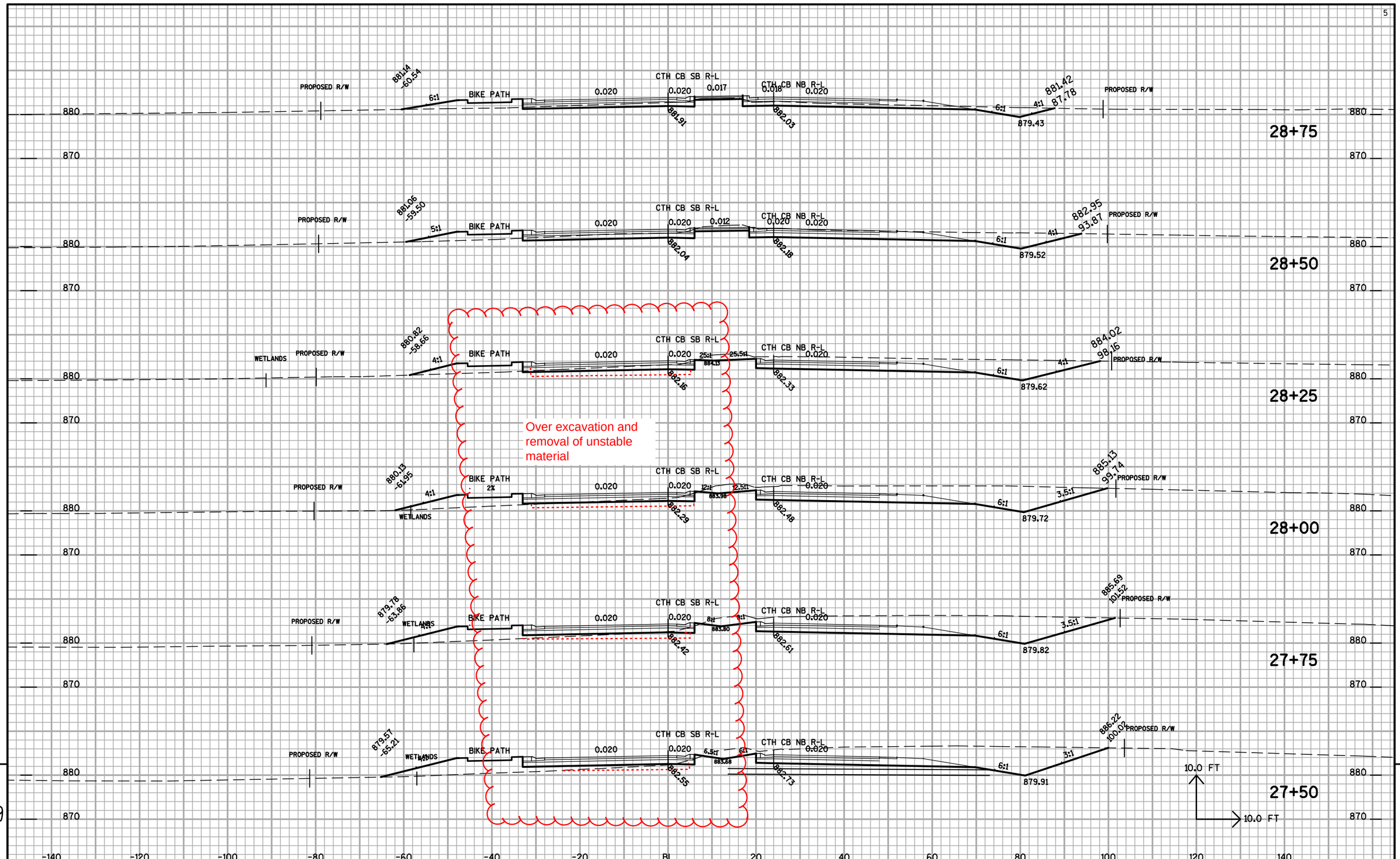

9

9

PROJECT NO: 1146-39-71	HWY: STH 15	COUNTY: OUTAGAMIE	CROSS SECTIONS CTH CB NORTH LEG OF ROUNDABOUT	SHEET NO: 235 E

FILE NAME : n:±pds±projects±Outagamie±1146-39-00±PS&E FILES±X-SECTIONS±XS-CTHCB NORTH LEG.DGN PLOT DATE : 28-JUL-2011 08:25 PLOT BY : dotmzc PLOT NAME : PLOT SCALE : 2.000000:1.000000

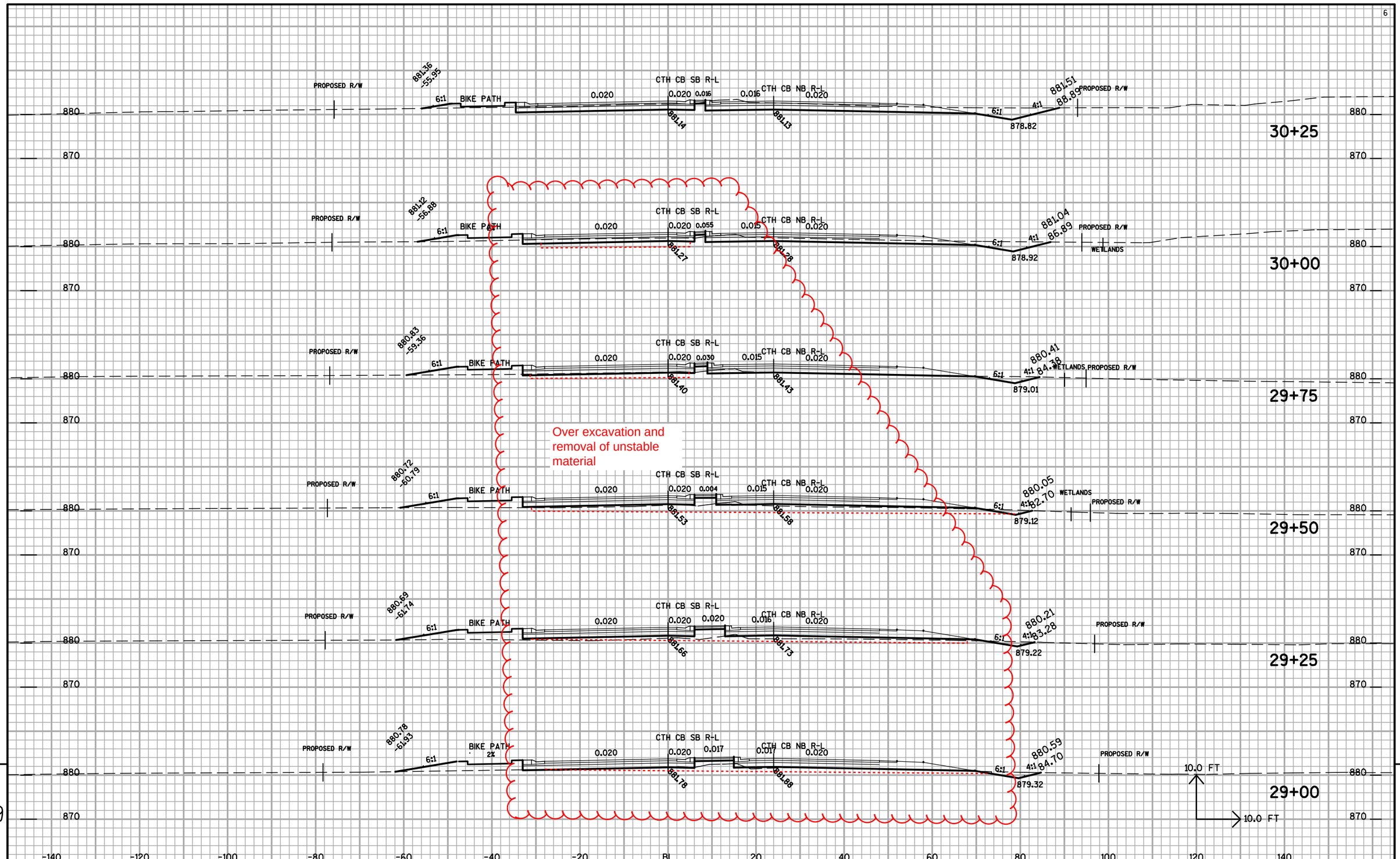

PROJECT NO: 1146-39-71	HWY: STH 15	COUNTY: OUTAGAMIE	CROSS SECTIONS CTH CB NORTH LEG OF ROUNDABOUT	SHEET NO: 236 E

FILE NAME : n:±pds±projects±Outagamie±1146-39-00±PS&E FILES±X-SECTIONS±XS-CTHCB NORTH LEG.DGN PLOT DATE : 28-JUL-2011 08:25 PLOT BY : dotmzc PLOT NAME : PLOT SCALE : 2.000000:1.000000

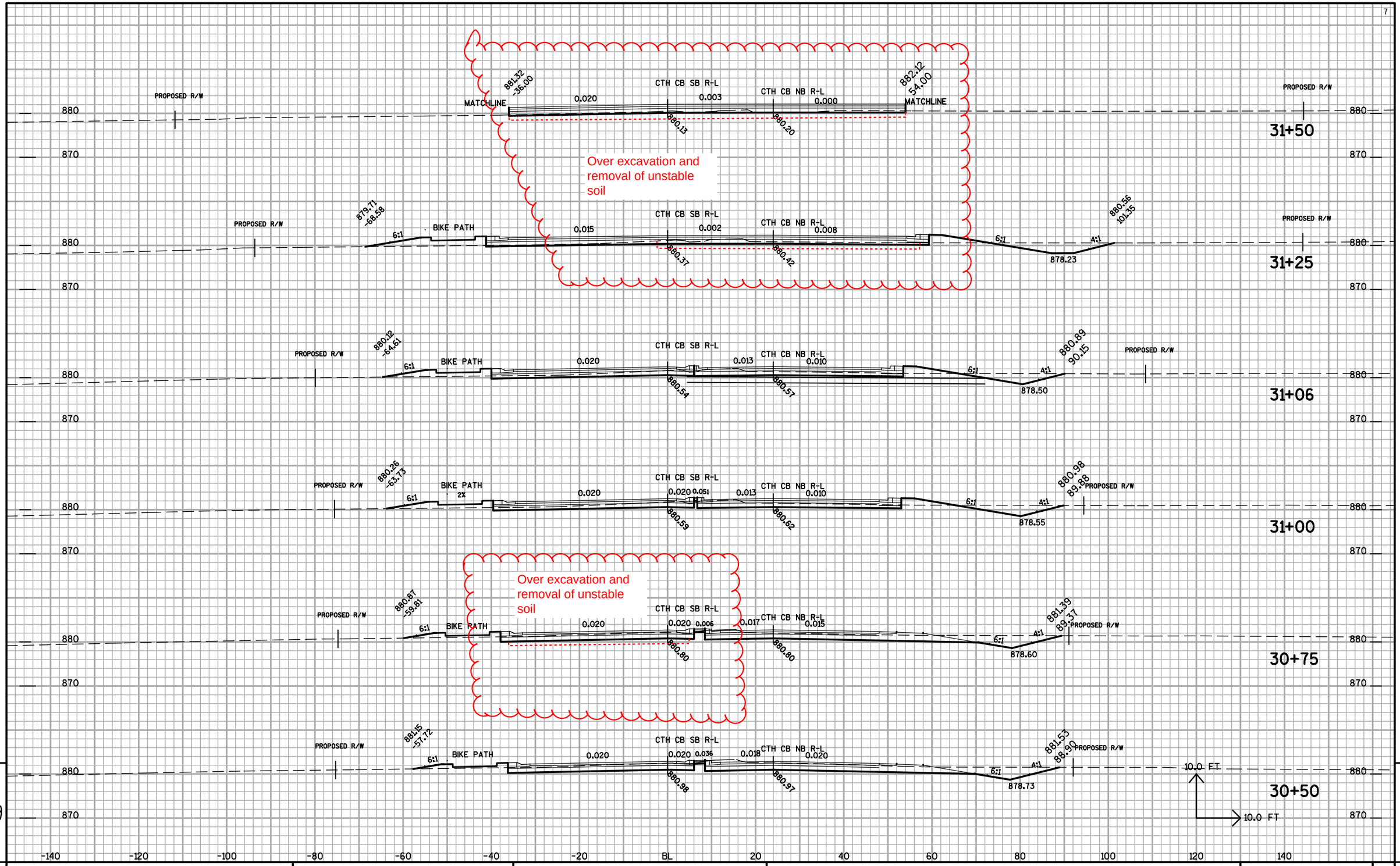

PROJECT NO: 1146-39-71	HWY: STH 15	COUNTY: OUTAGAMIE	CROSS SECTIONS CTH CB NORTH LEG OF ROUNDABOUT	SHEET NO: 237 E

FILE NAME : n:±pds±projects±Outagamie±1146-39-00±PS&E FILES±X-SECTIONS±XS-CTHCB NORTH LEG.DGN PLOT DATE : 28-JUL-2011 08:25 PLOT BY : dotmzc PLOT NAME : PLOT SCALE : 2.000000:1.000000

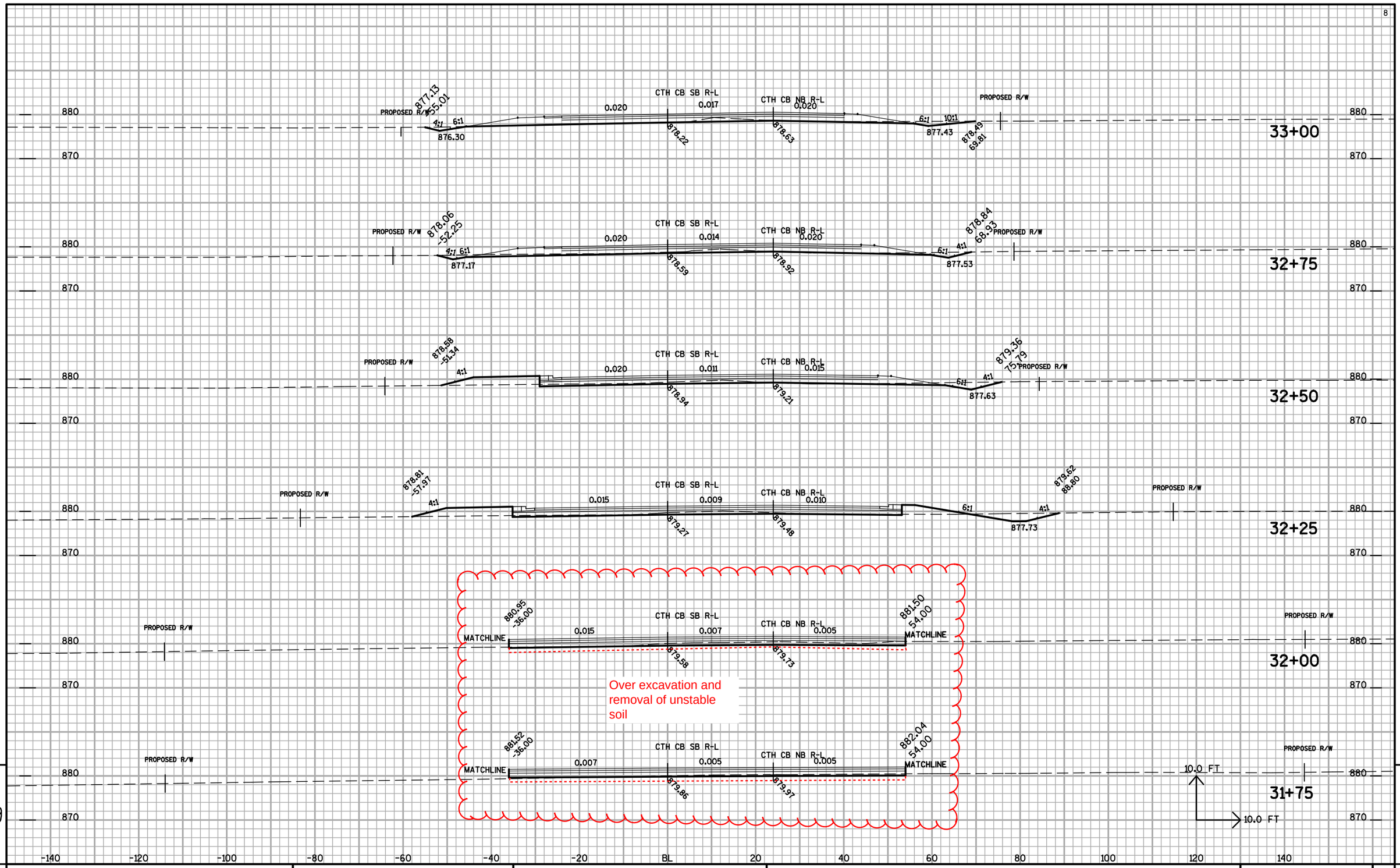

PROJECT NO: 1146-39-71	HWY: STH 15	COUNTY: OUTAGAMIE	CROSS SECTIONS CTH CB NORTH LEG OF ROUNDABOUT	SHEET NO: 238 E

FILE NAME : n:±pds±projects±Outagamie±1146-39-00±PS&E FILES±X-SECTIONS±XS-CTHCB NORTH LEG.DGN PLOT DATE : 28-JUL-2011 08:25 PLOT BY : dotmzc PLOT NAME : PLOT SCALE : 2.000000:1.000000

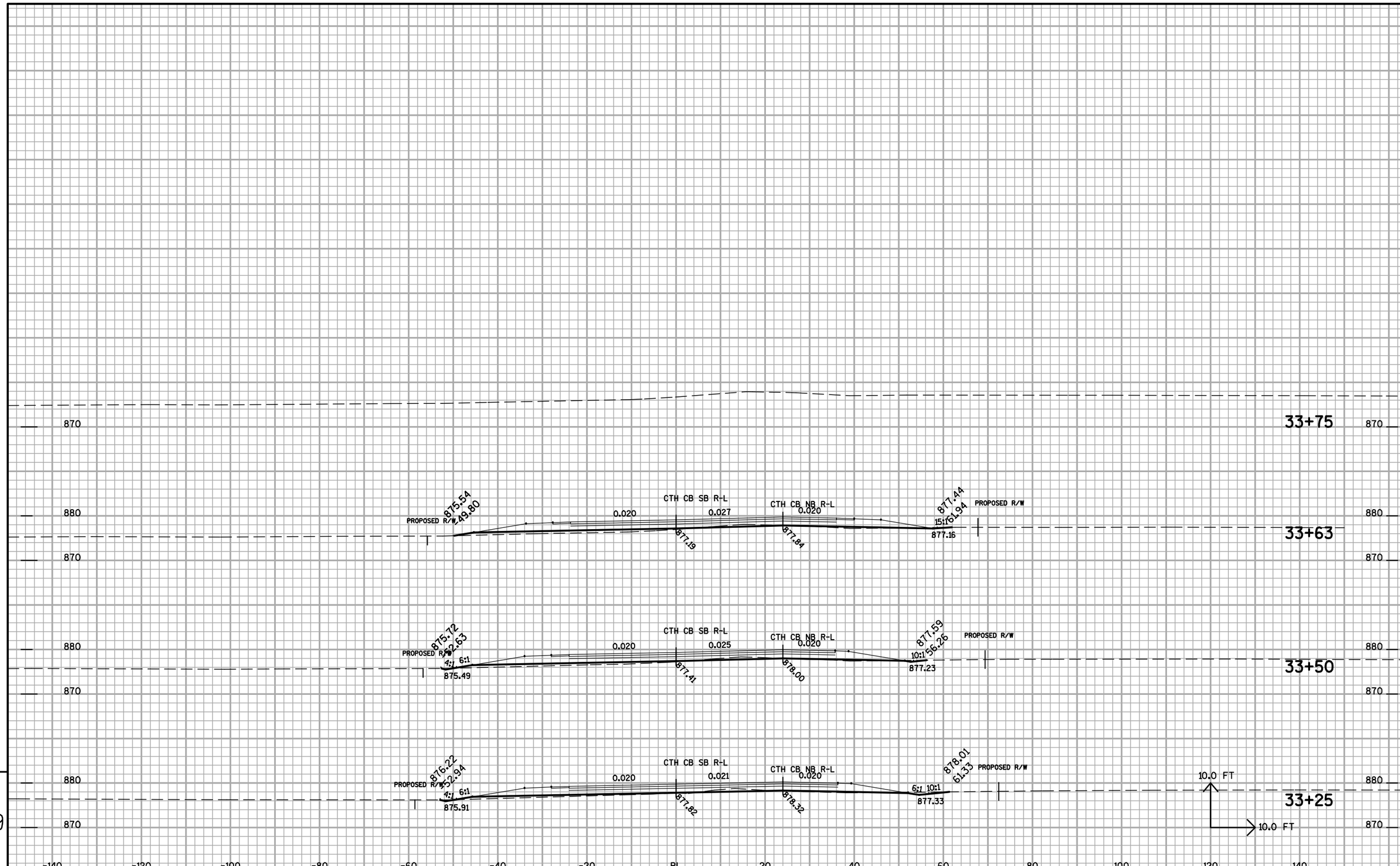

PROJECT NO: 1146-39-71	HWY: STH 15	COUNTY: OUTAGAMIE	CROSS SECTIONS CTH CB NORTH LEG OF ROUNDABOUT	SHEET NO: 239	E

FILE NAME : n:±pds±projects±Outagamie±1146-39-00±PS&E FILES±X-SECTIONS±XS-CTHCB NORTH LEG.DGN PLOT DATE : 28-JUL-2011 08:25 PLOT BY : dotmzc PLOT NAME : PLOT SCALE : 2.000000:1.000000

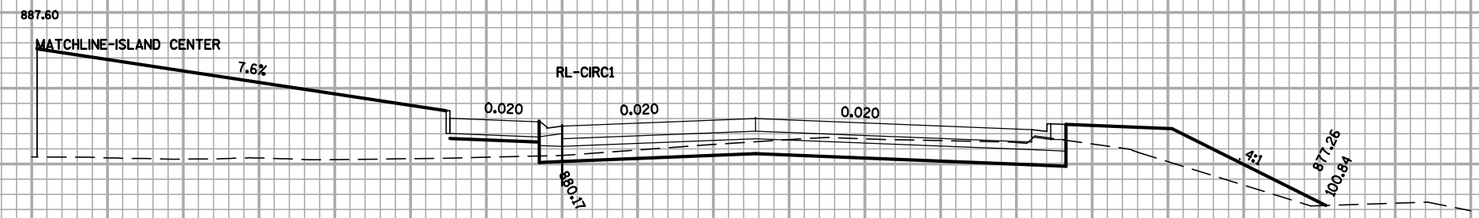

75+75

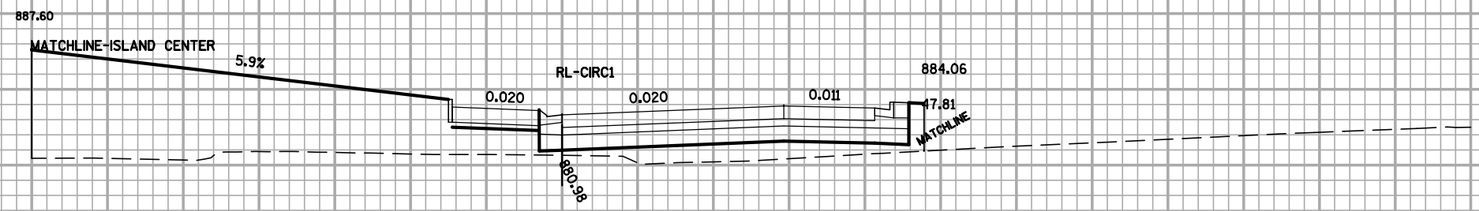

75+50

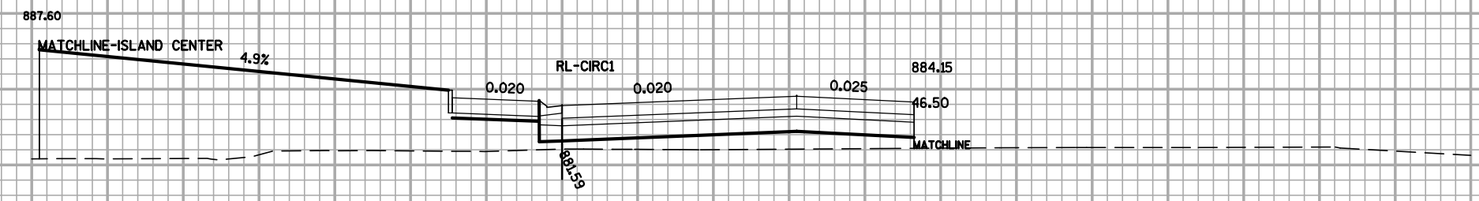

75+25

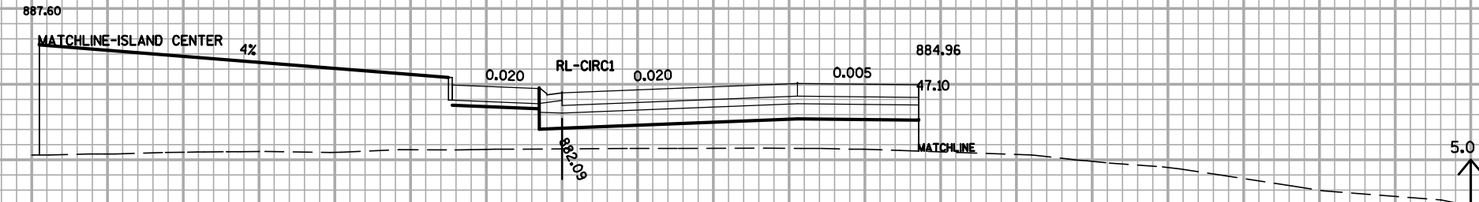

75+00

-140 -120 -100 -80 -60 -40 -20 BL 20 40 60 80 100 120 140

PROJECT NO: 1146-39-71	HWY: STH 15	COUNTY: OUTAGAMIE	CROSS SECTIONS CIRCULATORY ROADWAY OF ROUNDABOUT	SHEET NO: 240	E

FILE NAME : n:±pds±projects±Outagamie±1146-39-00±PS&E FILES±X-SECTIONS±XS-CIRC1.DGN PLOT DATE : 28-JUL-2011 08:25 PLOT BY : dotmzc PLOT NAME : PLOT SCALE : 2.000000:1.000000

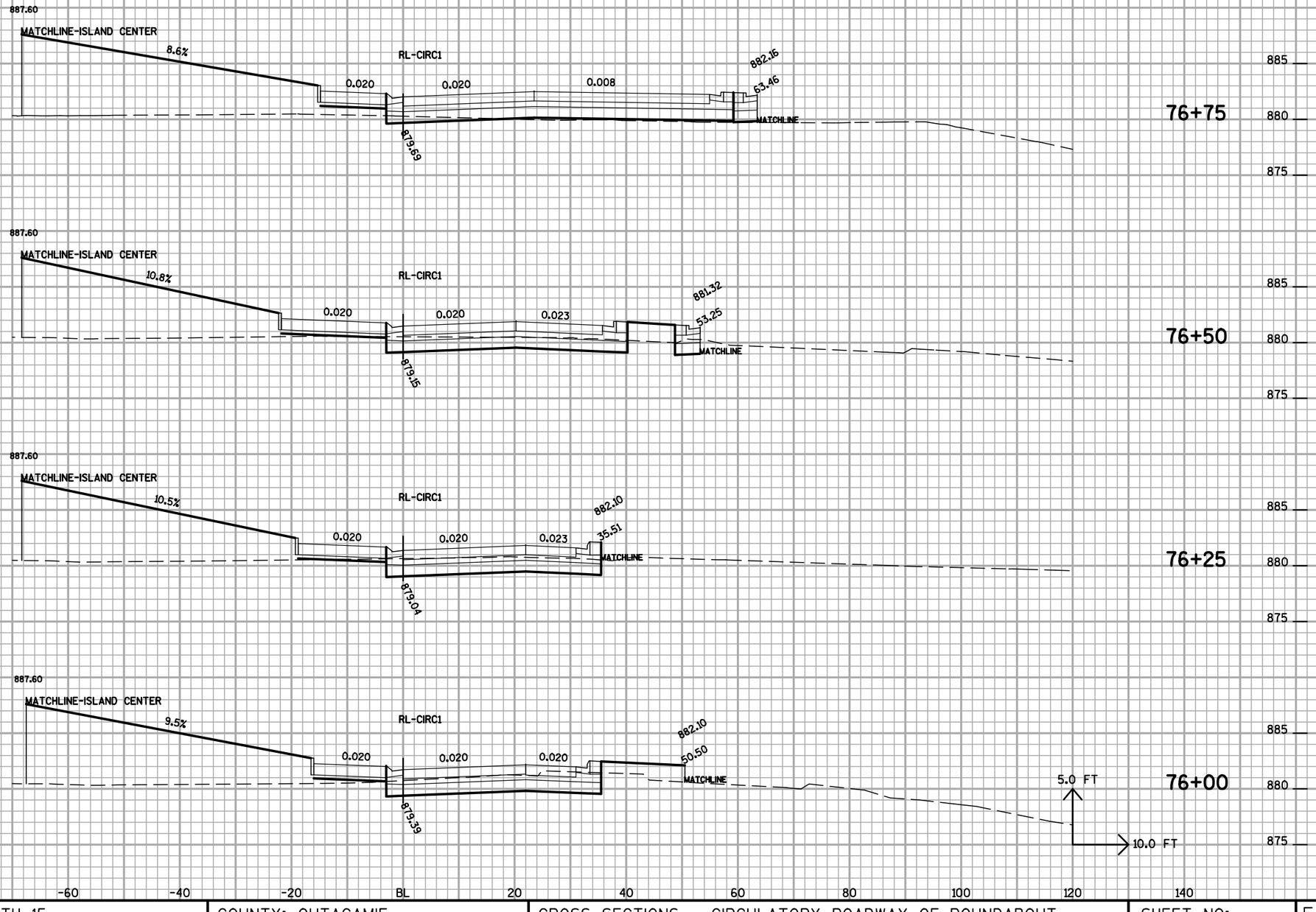

9

9

PROJECT NO: 1146-39-71	HWY: STH 15	COUNTY: OUTAGAMIE	CROSS SECTIONS CIRCULATORY ROADWAY OF ROUNDABOUT	SHEET NO: 241	E

FILE NAME : n:±pds±projects±Outagamie±1146-39-00±PS&E FILES±X-SECTIONS±XS-CIRC1.DGN PLOT DATE : 28-JUL-2011 08:25 PLOT BY : dotmzc PLOT NAME : PLOT SCALE : 2.000000:1.000000

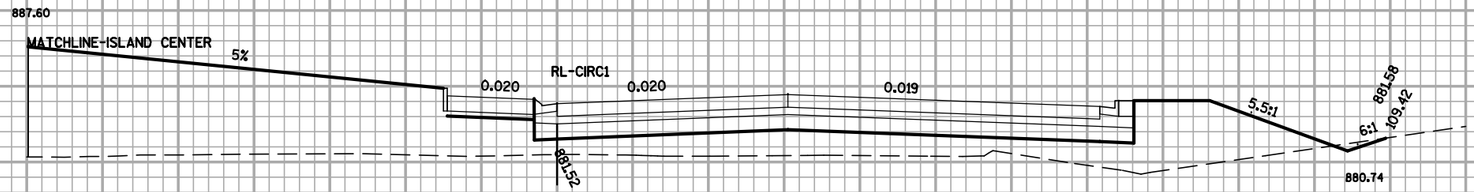

77+75

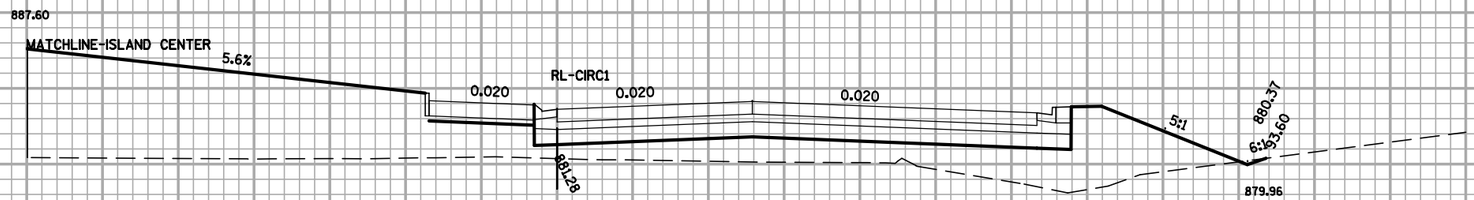

77+50

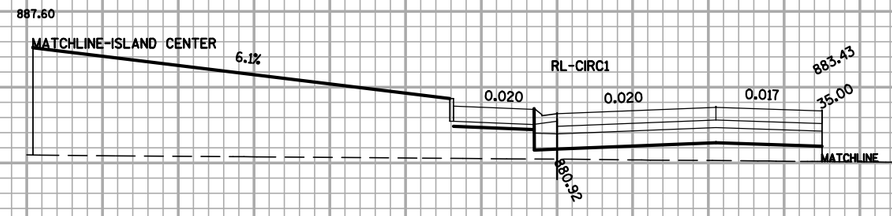

77+25

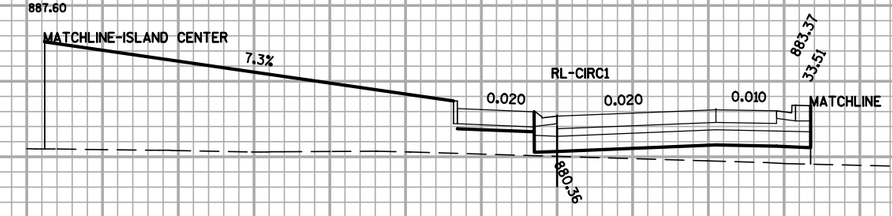

77+00

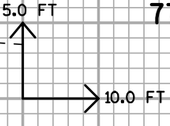

-140 -120 -100 -80 -60 -40 -20 BL 20 40 60 80 100 120 140

PROJECT NO: 1146-39-71	HWY: STH 15	COUNTY: OUTAGAMIE	CROSS SECTIONS CIRCULATORY ROADWAY OF ROUNDABOUT	SHEET NO: 242	E

FILE NAME : n:±pds±projects±Outagamie±1146-39-00±PS&E FILES±X-SECTIONS±XS-CIRC1.DGN PLOT DATE : 28-JUL-2011 08:25 PLOT BY : dotmzc PLOT NAME : PLOT SCALE : 2.000000:1.000000

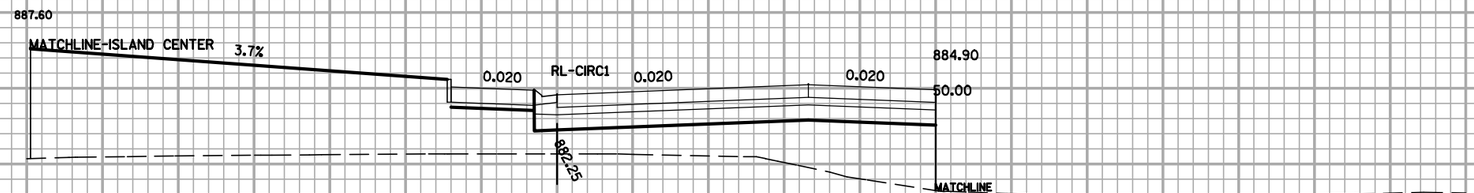

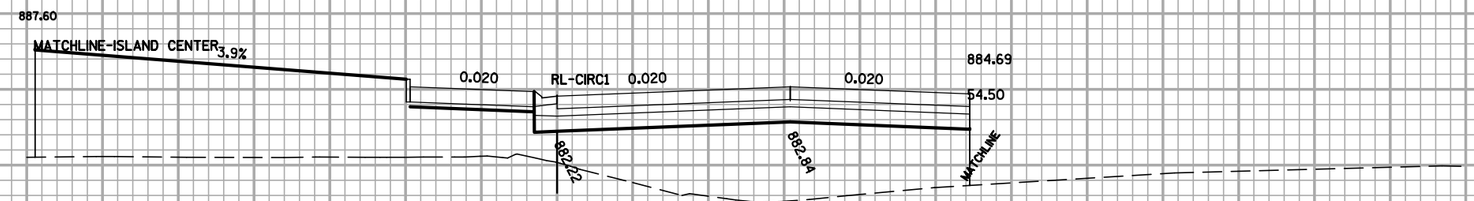

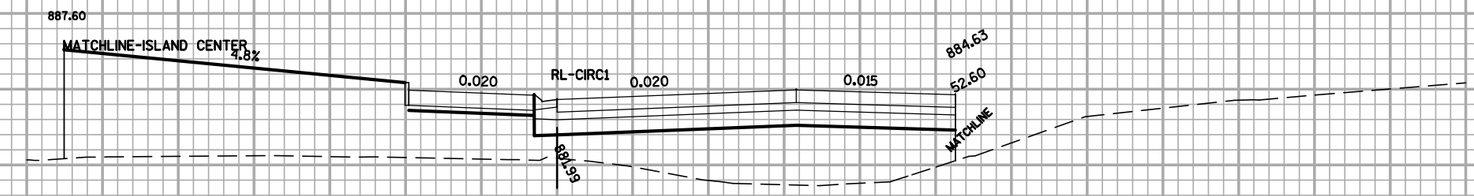

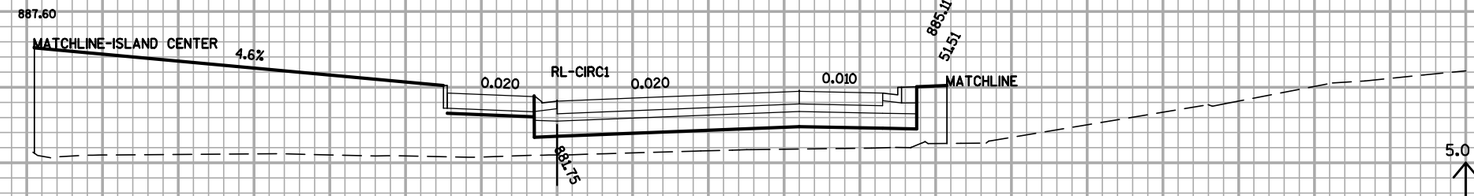

-140 -120 -100 -80 -60 -40 -20 BL 20 40 60 80 100 120 140

PROJECT NO: 1146-39-71	HWY: STH 15	COUNTY: OUTAGAMIE	CROSS SECTIONS CIRCULATORY ROADWAY OF ROUNDABOUT	SHEET NO: 243	E

FILE NAME : n:±pds±projects±Outagamie±1146-39-00±PS&E FILES±X-SECTIONS±XS-CIRC1.DGN PLOT DATE : 28-JUL-2011 08:25 PLOT BY : dotmzc PLOT NAME : PLOT SCALE : 2.000000:1.000000

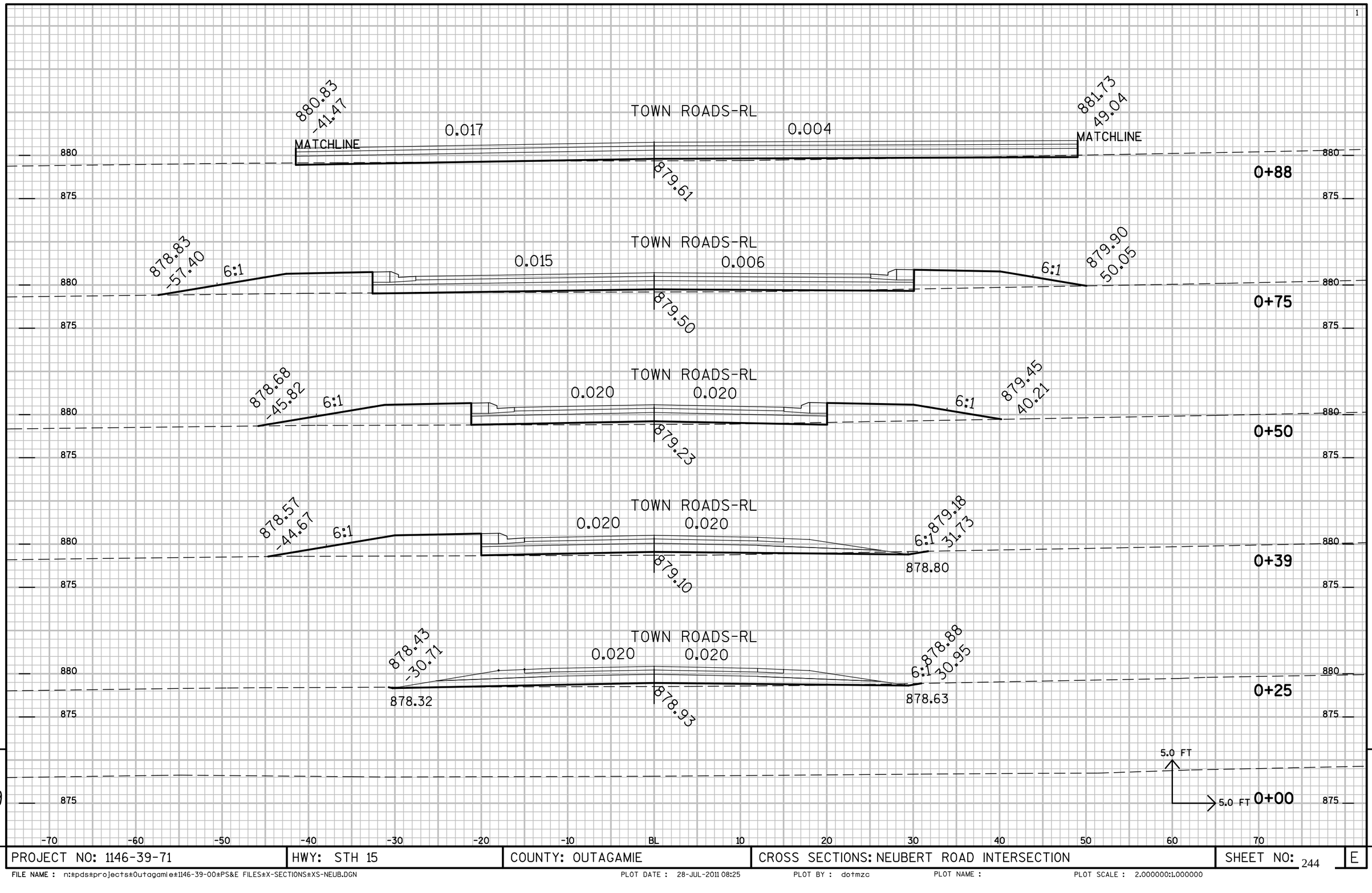

PROJECT NO: 1146-39-71	HWY: STH 15	COUNTY: OUTAGAMIE	CROSS SECTIONS: NEUBERT ROAD INTERSECTION	SHEET NO: 244	E

FILE NAME : n:±pds±projects±Outagamie±1146-39-00±PS&E FILES±X-SECTIONS±XS-NEUB.DGN PLOT DATE : 28-JUL-2011 08:25 PLOT BY : dotmzc PLOT NAME : PLOT SCALE : 2.000000:1.000000

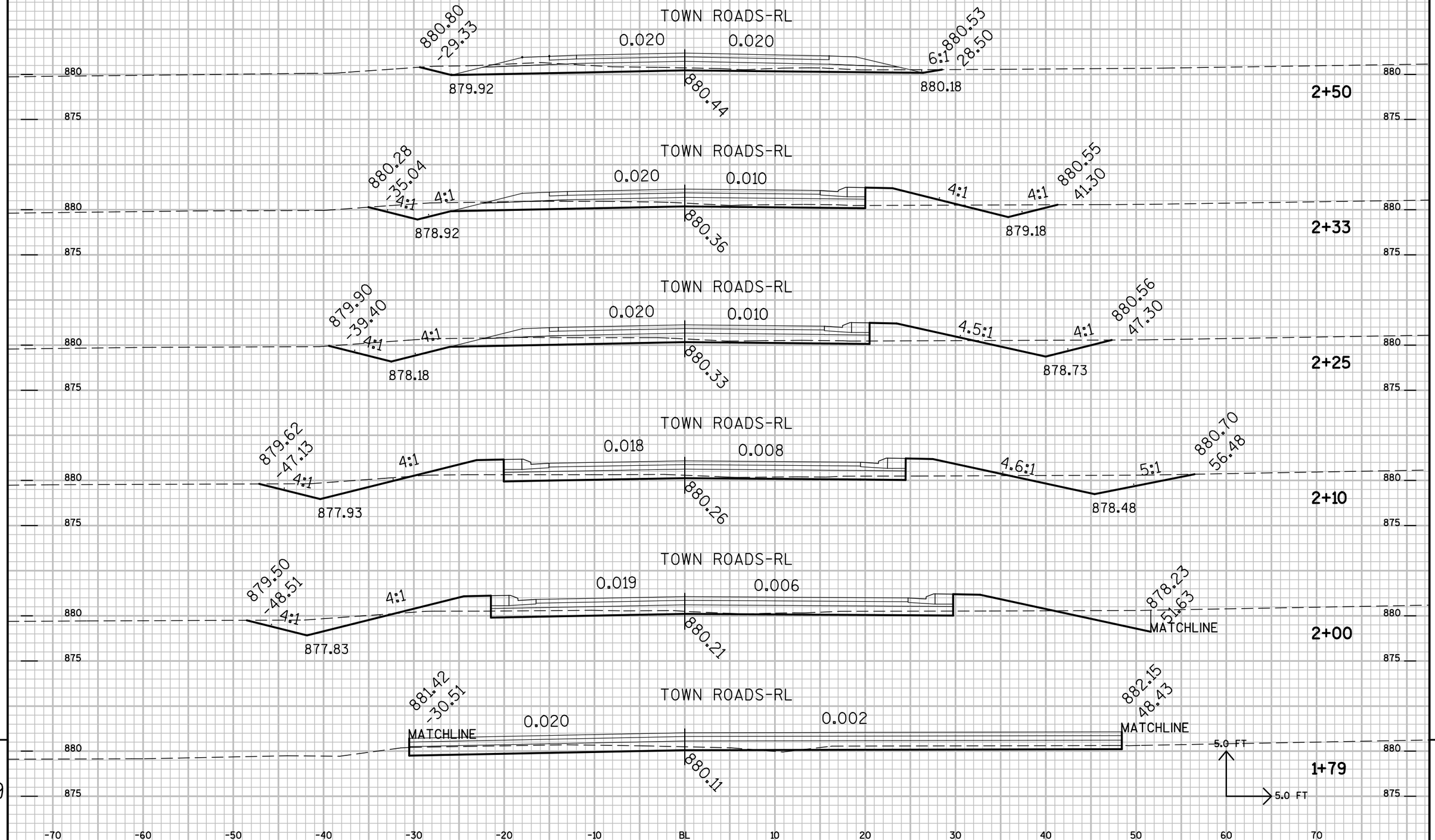

PROJECT NO: 1146-39-71	HWY: STH 15	COUNTY: OUTAGAMIE	CROSS SECTIONS: NEUBERT ROAD INTERSECTION	SHEET NO: 245	E

FILE NAME : n:±pds±projects±Outagamie±1146-39-00±PS&E FILES±X-SECTIONS±XS-NEUB.DGN PLOT DATE : 28-JUL-2011 08:25 PLOT BY : dotmzc PLOT NAME : PLOT SCALE : 2.000000:1.000000

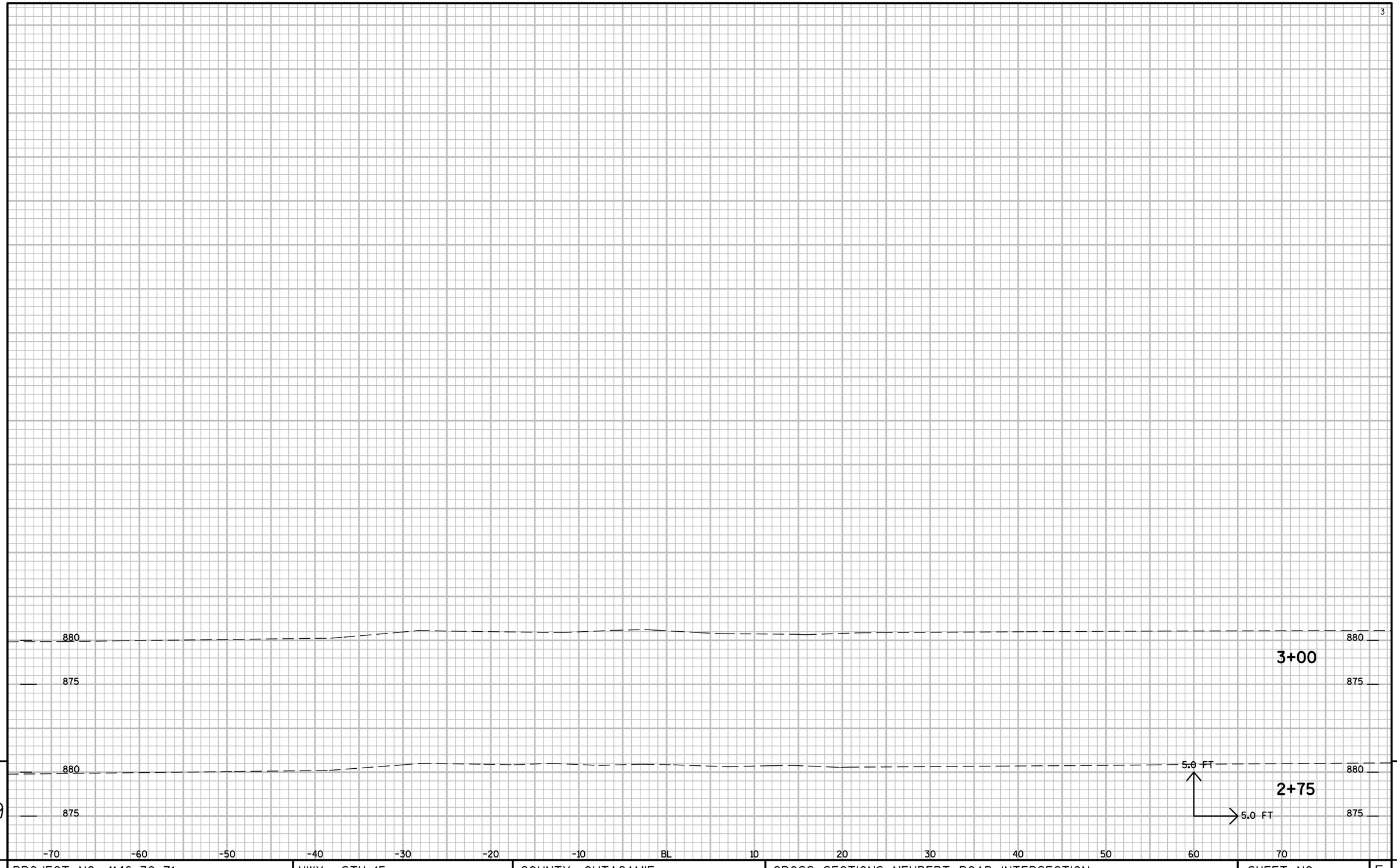

9 9

PROJECT NO: 1146-39-71	HWY: STH 15	COUNTY: OUTAGAMIE	CROSS SECTIONS: NEUBERT ROAD INTERSECTION	SHEET NO: 246	E

FILE NAME : n:±pds±projects±Outagamie±1146-39-00±PS&E FILES±X-SECTIONS±XS-NEUB.DGN PLOT DATE : 28-JUL-2011 08:26 PLOT BY : dotmzc PLOT NAME : PLOT SCALE : 2.000000:1.000000

Notes

Wisconsin Department of Transportation

Dedicated people creating transportation solutions
through innovation and exceptional service.

http://www.dot.wisconsin.gov