PLAN 898

PLAN 898

STATE PROJECT	FEDERAL PROJECT	
	PROJECT	CONTRACT
6004 - 1 - 71	—	

STATE OF WISCONSIN
DEPARTMENT OF TRANSPORTATION

PLAN OF PROPOSED IMPROVEMENT

C.T.H. "H" — C.T.H. "E"
DUCK CREEK AND BRANCH DUCK CREEK BRIDGES

C.T.H. "EE"

OUTAGAMIE COUNTY

As Built

No Changes

EE-18

Index of Sheets

Sheet No.	1	Title
Sheet No.	2	Typical Sections and Details
Sheet No.	3	Estimate of Quantities
Sheet No.	—	Miscellaneous Quantities
Sheet No.	4 - 4.1	Right of Way Plat
Sheet No.	5 - 5.1	Plan and Profile
Sheet No.	6 - 6.1	Standard Detail Drawings
Sheet No.	—	Standard Sign Plates
Sheet No.	8 - 8.10	Structure Plans
Sheet No.	—	Computer Earthwork Data
Sheet No.	—	Cross Sections

TOTAL SHEETS = 20

AS BUILT PLAN
NO. 898
SUPERVISOR G.E. BETHKE
RESIDENT L. RINGBLOM
CONTRACTOR BLEICK
COMPLETED 9-27-83

STATE PROJECT NUMBER
6004 - 1 - 71

10 FT. PLAN & PROFILE
100 FT.
0
SCALES

Design Designation

A.D.T. 1983	=	800
A.D.T. 2003	=	1150
D.H.V. 2003	=	115
D.	=	60/40
T.	=	5%
V.	=	55 M.P.H.

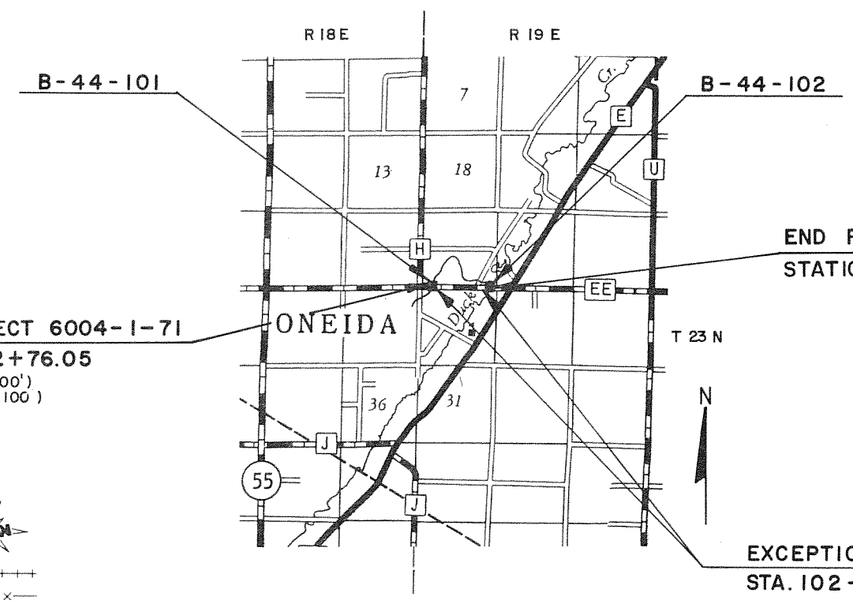

Conventional Signs

County Line
Township or Range Line
Section Line
Corporate or City Limits
Property line
Lot Line
Existing Right of Way Line
New Right of Way Line
Base or Survey Line
Slope Intercept
Existing Roadway or Private Entrance
Caution Symbol (Combustible fluids under pressure)
Railroads
Fence
Culverts in Place
Culverts Required
Power Pole
Telephone or Telegraph Pole
Right of Way Markers
Marsh
Wooded Area
Grade Elevation

Layout
Scale 0 1 2 MI.

Total Net Length of Centerline = 0.022 Mi. RURAL

NOTE:
* — ALL COORDINATES SHOWN ON THIS PLAT ARE SCALED FROM USGS. TOPOGRAPHIC MAP, ONEIDA SOUTH, WIS., 7.5 MIN. QUADRANGLE (CENTRAL ZONE) FOR IDENTIFICATION ONLY.

EE-18

APPROVED FOR OUTAGAMIE COUNTY
8-10-82 DATE
SIGNATURE OF OFFICIAL

WISCONSIN CHARLES F. CHRISTENSEN GREEN BAY, WIS. PROFESSIONAL ENGINEER

PLANS PREPARED BY
OWEN AYRES & ASSOCIATES, INC.
CONSULTING ENGINEERS
GREEN BAY, WISCONSIN

STATE OF WISCONSIN
DEPARTMENT OF TRANSPORTATION

Surveyor ____ District Checker ____
Designer ____ C O Checker BUE
District Supervisor J.E.F. C O Coordinator MWT

Approved
Date 10/27/82 District Transportation Director

Approved
Date 12-3-82 Chief Design Engineer

Approved
Date 12/7/82 Director of Development

U S DEPARTMENT OF TRANSPORTATION
FEDERAL HIGHWAY ADMINISTRATION
REGION 5 WISCONSIN DIVISION

Approved
Date ____ Division Administrator

Cat. No. 2130 - D110

FEDERAL PROJECT NUMBER	SHEET NO.
6004 – 1 – 71	2

TYPICAL SECTIONS
FOR
C.T.H. "EE" OUTAGAMIE COUNTY

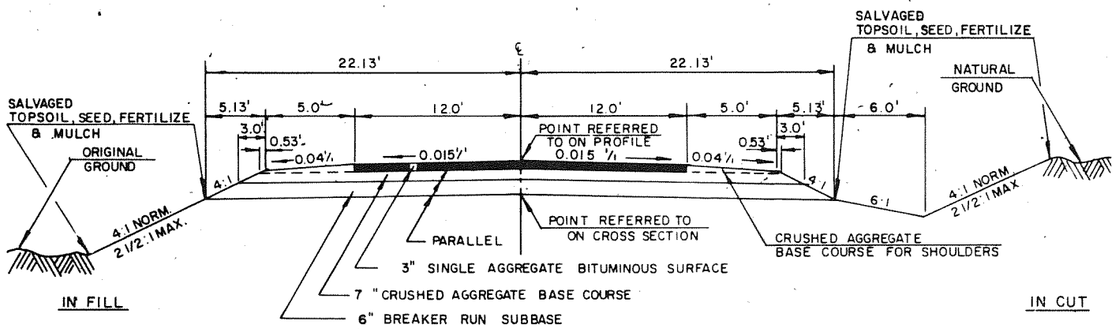

TYPICAL FINISHED SECTION FOR C.T.H."EE"

(FOR REFERENCE ONLY)

UTILITIES

ONEIDA COMMUNITY HEALTH CENTER
824 DOUBLE E ROAD
DE PERE, WI. 54115
ATTENTION: MR. JOHN SPANGBERG
TELEPHONE: 1 (414) 869-2711 EXT. 256

NORTHEAST TELEPHONE COMPANY
122 SOUTH ST. AUGUSTINE STREET
PULASKI, WI. 54162
ATTENTION: MR. ROBERT H. RIORDAN
TELEPHONE: 1 (414) 822 - 3201

WISCONSIN TELEPHONE COMPANY
114 E. COLLEGE AVE.
P.O. BOX 2159
APPLETON, WI. 54913
ATTENTION: MR. MARV ROBERTSON
TELEPHONE: 1 (414) 735-3253

WISCONSIN ELECTRIC POWER COMPANY
P.O. BOX 1699
APPLETON, WI. 54913
ATTENTION: MR. D. P. O'SHASKY
TELEPHONE 1 (414) 735 - 8450

STANDARD DETAIL DRAWINGS

NAME PLATE STRUCTURES	12 A3 – 4
CONSTRUCTION BARRICADES AND STANDARD SIGNS	15 C1 – 7

GENERAL NOTES

ALL DISTANCES ARE GROUND DISTANCES.

ALL BEARINGS ARE TRUE BEARINGS.

ALL TIES ON THIS PLAN ARE HORIZONTAL UNLESS DESCRIBED OTHERWISE.

THE LOCATION OF EXISTING AND PROPOSED UTILITIES AS SHOWN ON THE PLANS ARE APPROXIMATE. THERE MAY BE OTHER UTILITY INSTALLATIONS WITHIN THE PROJECT WHICH ARE NOT SHOWN.

THE WISC. D.O.T. WILL FURNISH A MONUMENT TO BE SET BY THE CONTRACTOR AS DETERMINED BY THE ENGINEER.

PLAN AND PROFILE SHEETS ARE FOR INFORMATIONAL PURPOSES ONLY.

E S T I M A T E O F Q U A N T I T I E S

DATE 03/02/83

PROJECT ID: 6004-01-71
OUTAGAMIE COUNTY
C.T.H "H"-C.T.H. "E"
DUCK CREEK AND BRANCH DUCK CREEK BRIDGES
C.T.H. "EE"

ITEM	ITEM DESCRIPTION	UNIT	TOTAL	6004-01-71 QUANTITY
20351	REMOVING OLD BRIDGE, STATION 102+80	L.S.	1.00	1.00
20352	REMOVING OLD BRIDGE, STATION 149+70	L.S.	1.00	1.00
20610	EXCAVATION FOR STRUCTURES, BRIDGES B-44-101	L.S.	1.00	1.00
20611	EXCAVATION FOR STRUCTURES, BRIDGES B-44-102	L.S.	1.00	1.00
50201	CONCRETE MASONRY, BRIDGES	C.Y.	308.00	308.00
50307	PRESTRESSED GIRDER, I TYPE, 54-INCH	L.F.	364.00	364.00
50504	HIGH-STRENGTH BAR STEEL REINFORCEMENT, BRIDGES	LB.	38,240.00	38,240.00
50625	BEARING PADS, ELASTOMERIC	S.F.	12.00	12.00
51121	STEEL PILING, DELIVERED AND DRIVEN, HP 10-INCH 42 POUND	L.F.	420.00	420.00
51340	TUBULAR RAILING, TYPE F, STRUCTURE B-44-102	L.S.	1.00	1.00
60602	HEAVY RIPRAP	C.Y.	170.00	170.00
61910	MOBILIZATION	L.S.	1.00	1.00
64201	FIELD OFFICE, TYPE A	L.S.	1.00	1.00
64301	TRAFFIC CONTROL	L.S.	1.00	1.00

SHEET 3

REVISION DATE	R/W PROJECT NUMBER	SHEET NUMBER
	215 - 81	4.1
	FEDERAL PROJECT NUMBER	

PLAT OF RIGHT OF WAY REQUIRED FOR

C.T.H. "EE"

OUTAGAMIE COUNTY

SCALE 0 100 200 Ft. DATE

CONSTRUCTION PROJECT NUMBER

6004-1-71 4

SCHEDULE OF LANDS AND INTERESTS REQUIRED

PARCEL NUMBER	OWNER	INTEREST REQ'D.	L.H.E. ACRES	ACRES REQUIRED NEW R/W REQUIRED	EXIST. R/W	TOTAL R/W REQUIRED	TOTAL REMAINING ACRES
1	CASPER HILL	FEE TITLE		0.04	0.17	0.21	2.29
2	THOMAS P. GARVEY	FEE TITLE		0.65	1.52	2.17	126.46
3	FLOYD P. COTTRELL	FEE TITLE		1.06	2.55	3.61	109.39
4	ORIN A. PETERSON	FEE TITLE		0.02	0.13	0.15	0.50
5	GAIL C. HELKE	FEE TITLE		0.04	0.12	0.16	1.86

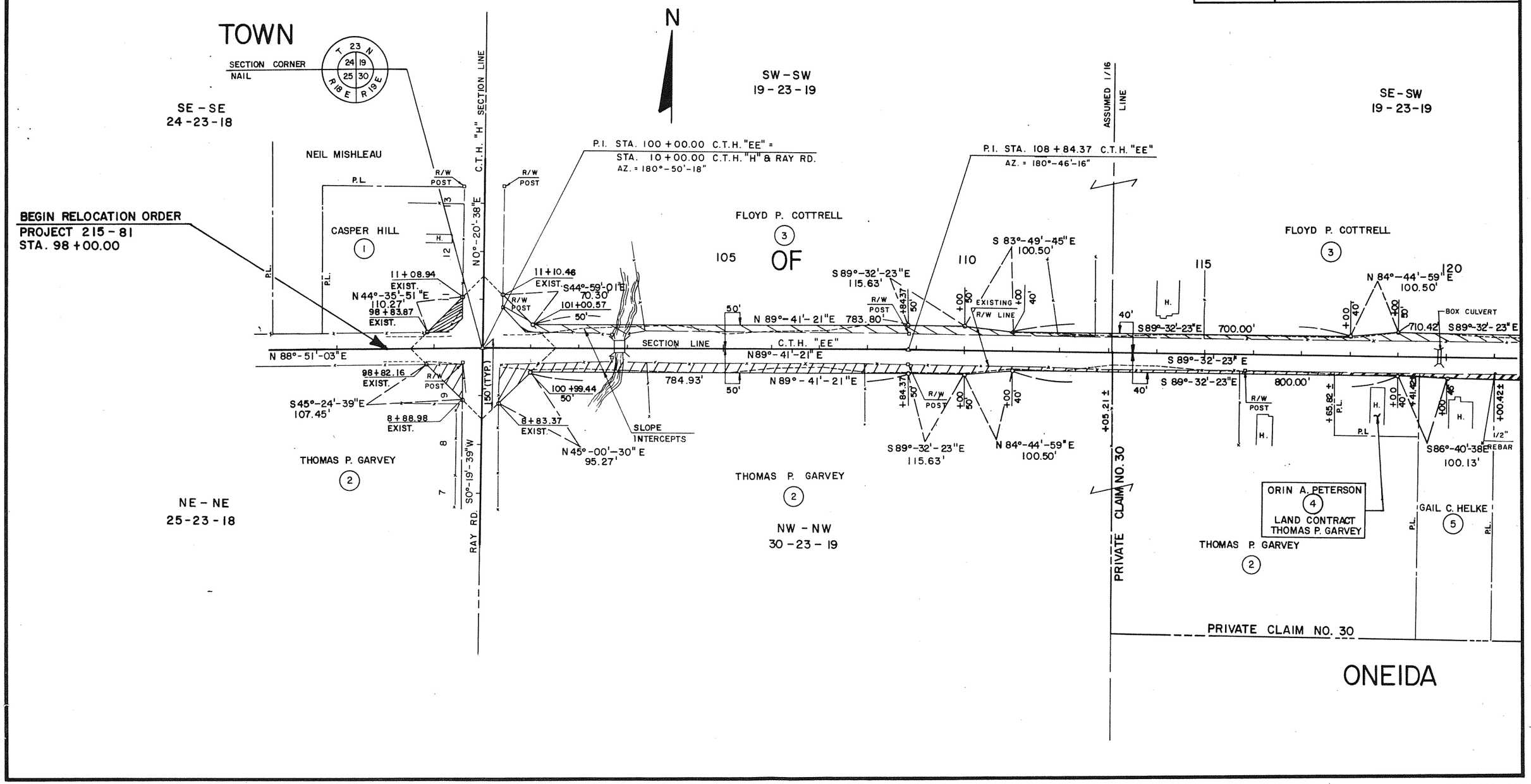

Cat. No 2130 – 0175

REVISION DATE	R/W PROJECT NUMBER	SHEET NUMBER
	215 – 81	4.2
	FEDERAL PROJECT NUMBER	

PLAT OF RIGHT OF WAY REQUIRED FOR
C.T.H. "EE"
OUTAGAMIE COUNTY

SCALE 0 100 200Ft. DATE

CONSTRUCTION PROJECT NUMBER
6004-1-71 4.1

SCHEDULE OF LANDS AND INTERESTS REQUIRED

PARCEL NUMBER	OWNER	INTEREST REQUIRED	L.H.E. ACRES	ACRES REQUIRED: NEW R/W REQUIRED	EXISTING R/W	TOTAL R/W REQUIRED	TOTAL REMAINING ACRES
3	FLOYD P. COTTRELL	FEE TITLE		1.06	2.55	3.61	150.00
5	GAIL C. HELKE	FEE TITLE		0.04	0.12	0.16	1.86
6	ORIN J. PETERSON	FEE TITLE		0.04	0.12	0.16	1.79
7	ORIN A. PETERSON	FEE TITLE		0.09	0.13	0.22	4.27
8	LOUIS J. PETERSON	FEE TITLE		0.31	0.89	1.20	18.80
9	JOHN M. DORN	FEE TITLE		0.05	0.12	0.17	21.83
10	ELSIE L. GREEN	FEE TITLE		0.95	1.16	2.11	11.89
11	DONALD A. PETERSON	FEE TITLE		0.63	1.42	2.05	28.45
14	U.S.A.	FEE TITLE		0.17	0.61	0.78	4.72

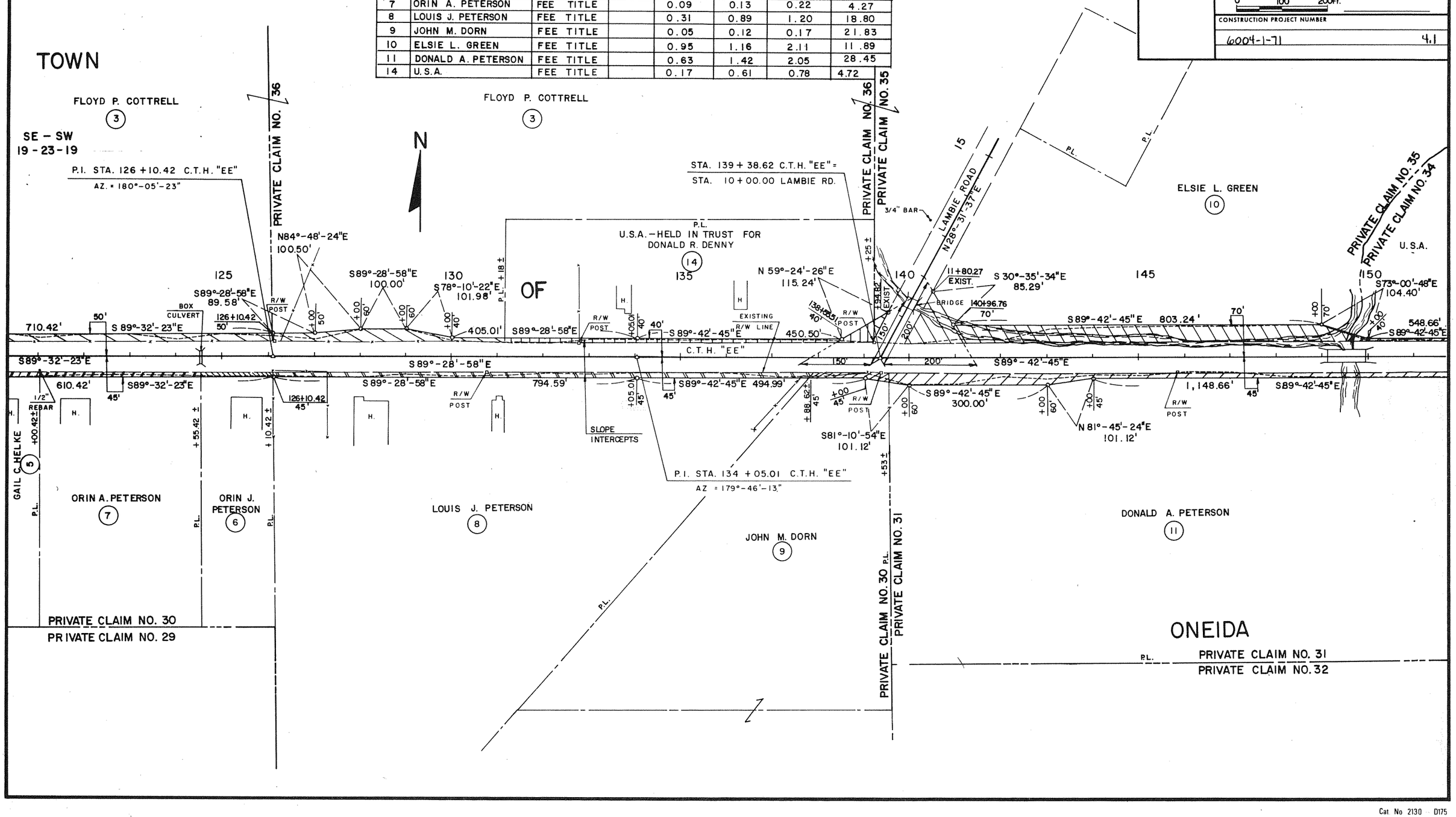

FEDERAL PROJECT NUMBER	SHEET NO.
6004 - 1 - 71	5

BENCH MARKS

NO.	STATION	DESCRIPTION		ELEV.
1	100+00	SPOT ELEV. AT ℄ OF C.T.H."EE" & C.T.H."H"		727.00
2	97+61	BLUE X ON TOP 36" R.C.P.	21' LT.	729.03
3	102+72	TOP OF S.W. ABUT.	10.5' RT.	724.23
4	114+07	S.W. COR. TOP BTTM. STEP	66' LT.	735.88
5	120+19	N.W. COR. TOP BTTM. CONC. STEP	76' RT.	720.72

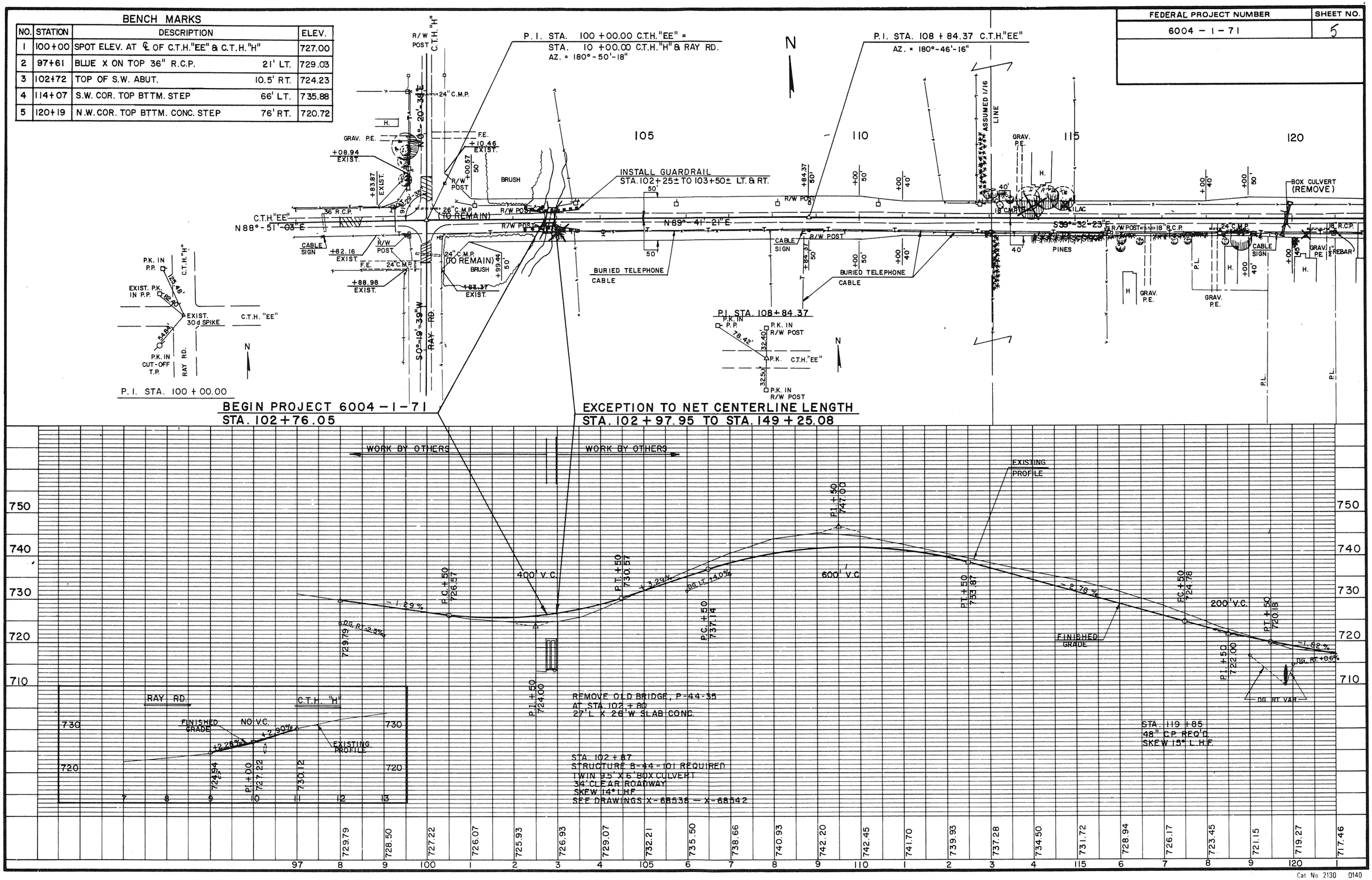

FEDERAL PROJECT NUMBER	SHEET NO.
6004 – 1 – 71	5.1

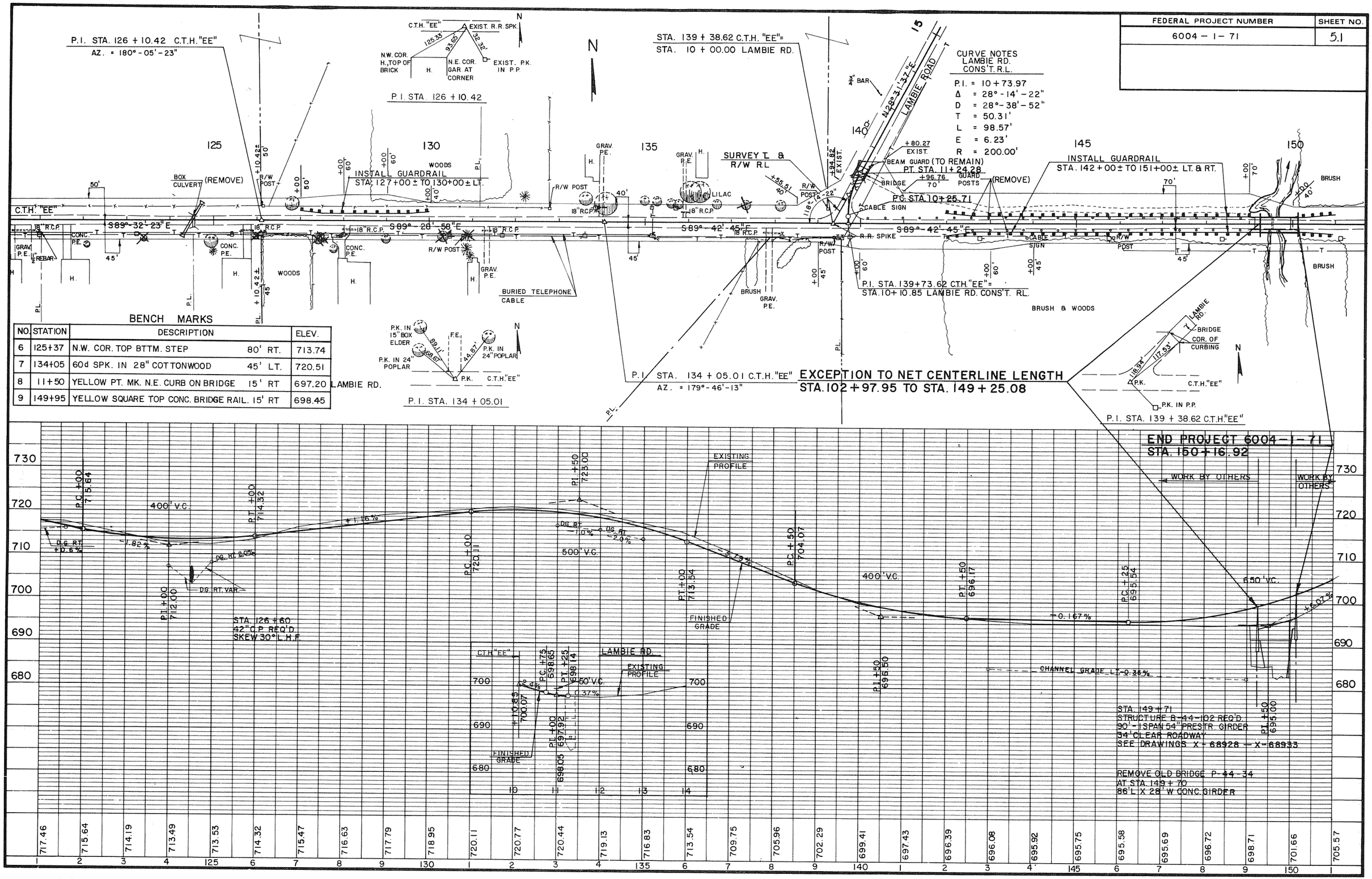

BENCH MARKS

NO.	STATION	DESCRIPTION		ELEV.
6	125+37	N.W. COR. TOP BTTM. STEP	80' RT.	713.74
7	134+05	60d SPK. IN 28" COTTONWOOD	45' LT.	720.51
8	11+50	YELLOW PT. MK. N.E. CURB ON BRIDGE	15' RT	697.20
9	149+95	YELLOW SQUARE TOP CONC. BRIDGE RAIL.	15' RT	698.45

LAMBIE RD.

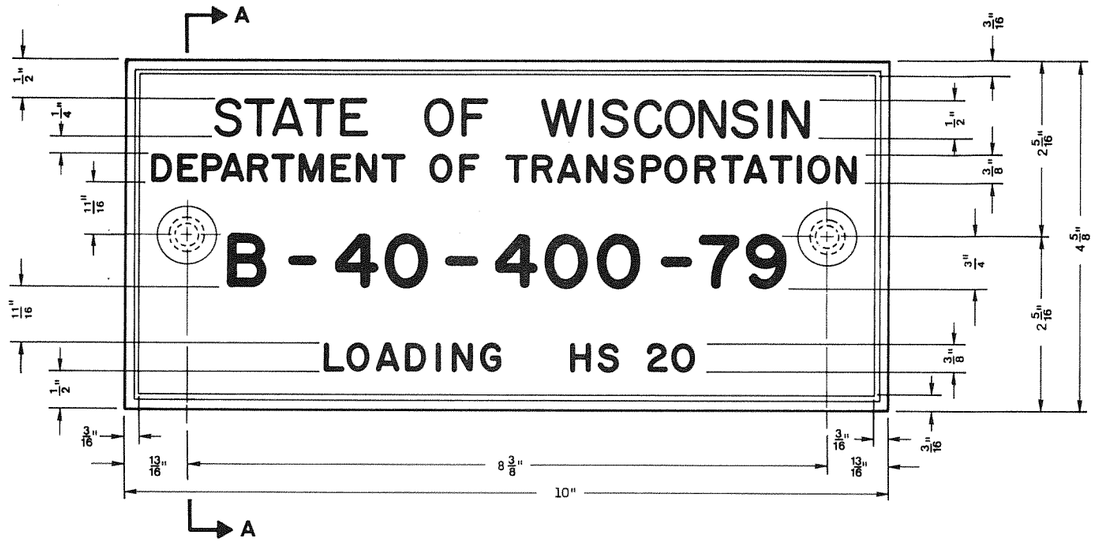

TYPICAL NAME PLATE

(BRIDGES, CULVERTS, AND RETAINING WALLS)

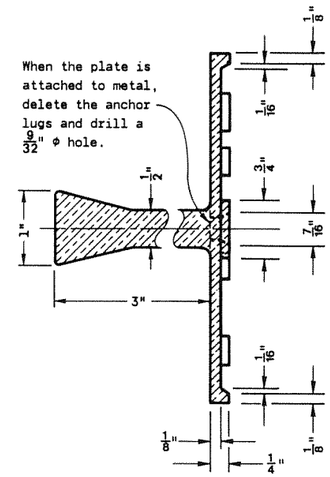

SECTION A-A

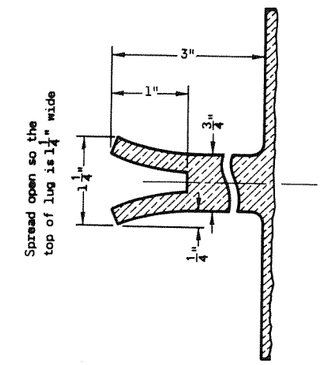

ALTERNATE LUG

FOR MULTI-UNIT STRUCTURES LINES 4 AND 5 ABOVE SHALL READ:

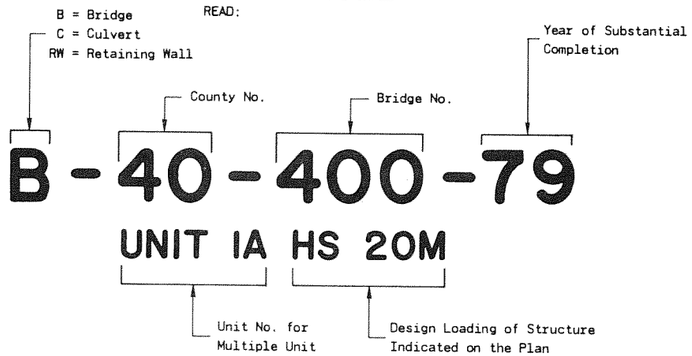

NUMBERING AND LOADING DESIGNATION
MULTI-UNIT STRUCTURES

GENERAL NOTES

Name Plates to be installed on Bridges, Culverts, and Retaining Walls shall conform to the requirements of Section 506.2.4 of the Standard Specifications.

The Bridge Number and Design Loading shown on this drawing are examples only. See Construction Plans for individual numbering and design loading.

NAME PLATE
(STRUCTURES)

State of Wisconsin
Department of Transportation
Division of Transportation Facilities

APPROVED 9-27-79 DATE — CHIEF DESIGN ENGINEER

FHWA

S.D.D. 12 A 3-4

TABLE OF BARRICADE CHARACTERISTICS

BARRICADE TYPE	I	II	III
Height	3' Minimum		5' Minimum
*Rail Width	8" Minimum to 12" Maximum		
Rail Length	2' Minimum		4' Minimum
**Stripe Width	6" at 45° Angle		
Stripe Colors	Reflectorized Orange & White		

* Nominal dimensions when barricade is constructed of lumber.
** Shall be 4" for rail lengths less than 3'.

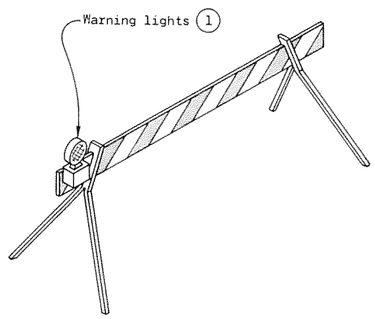

TYPICAL TYPE I BARRICADE

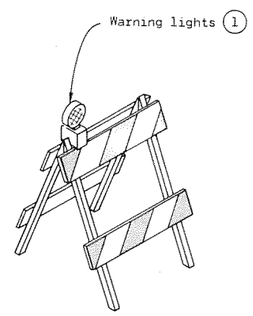

TYPICAL TYPE II BARRICADE

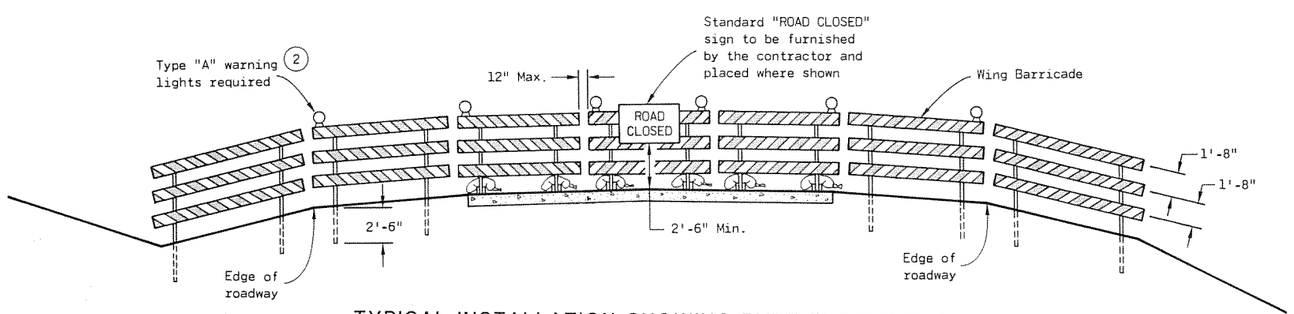

TYPICAL INSTALLATION SHOWING TYPE III BARRICADE

CONSTRUCTION BARRICADES

R11-2

48" x 30"

Black Lettering on Reflective White Background

Letter Series "D"
Letter height 8"

W20-3

48" x 48"

Black Lettering on Reflective Orange Background

Letter Series "D"
Letter height 7"

STANDARD SIGNS - TYPE II

GENERAL NOTES

The contractor shall furnish, erect and maintain barricades and signs. Details regarding location, spacing, dimensions, fabrication, material, sign lettering, lighting devices and color of barricades and signs shall conform to this drawing, the Manual On Uniform Traffic Control Devices, the Standard Specifications, Special Provisions and/or plans.

Type III Barricades and Signs shall be erected at the termini of projects and at other road or street locations where it is necessary to control or eliminate public access to the construction area.

Type I and II Barricades shall be used on projects when traffic is to be maintained through the construction area.

The actual field location of barricade installations and advance signs shall be as directed by the Engineer.

Each barricade shall have the name and telephone number of a person responsible for 24 hour emergency service printed in letters at least $\frac{3}{4}$ inch in height on the barricade rails. Prior to May 1, 1983, such information may be shown on either front or back faces of the barricade rails. After May 1, 1983, all printed information or identification markings shall be shown only on the back side of barricade rails.

Type I Barricades may include other unstriped horizontal panels necessary to provide stability.

On high speed expressways or in other situations where barricades may be susceptible to overturning in the wind, sandbags should be used for ballasting. Sandbags may be placed on lower parts of the frame or stays to provide the required ballast but shall not be placed on top of any striped rail.

(1) Unless otherwise provided elsewhere in the contract, warning lights are required on all barricades which will be located near traffic operations during periods of inclement weather or hours of darkness. Barricades used to shield isolated hazards shall be equipped with Type "A" (low intensity - flashing) lights unless Type "B" (high intensity)- flashing) lights are specified elsewhere in the contract documents. Barricades used for channelization or delineation of the travel path shall be equipped with Type "C" (steady burn) lights except for the initial barricade(s) in sequence, which shall be equipped with Type "A" or "B" lights as previously noted.

(2) Two warning lights shall be provided on the center barricade and at least one warning light shall be provided on each of the other barricades within the roadway limits. Spacing of the warning lights shall be uniform to the edge of roadway as shown.

CONSTRUCTION BARRICADES
& STANDARD SIGNS

State of Wisconsin
Department of Transportation

APPROVED
9-14-81
DATE
FHWA

D. D. Strand
CHIEF DESIGN ENGINEER

S.D.D. 15 C 1-7

STATE PROJECT NUMBER	SHEET NO.
6004-1-71	8

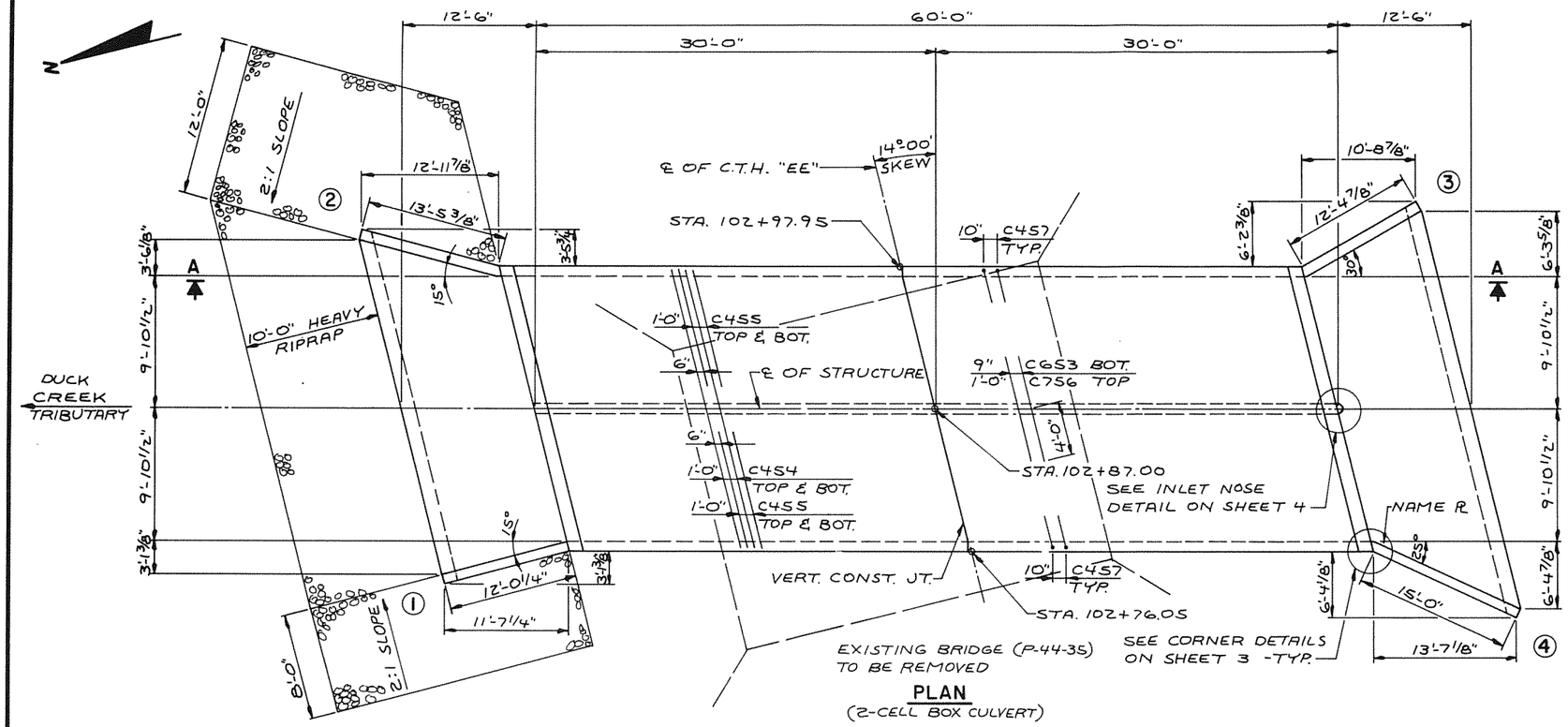

PLAN
(2-CELL BOX CULVERT)

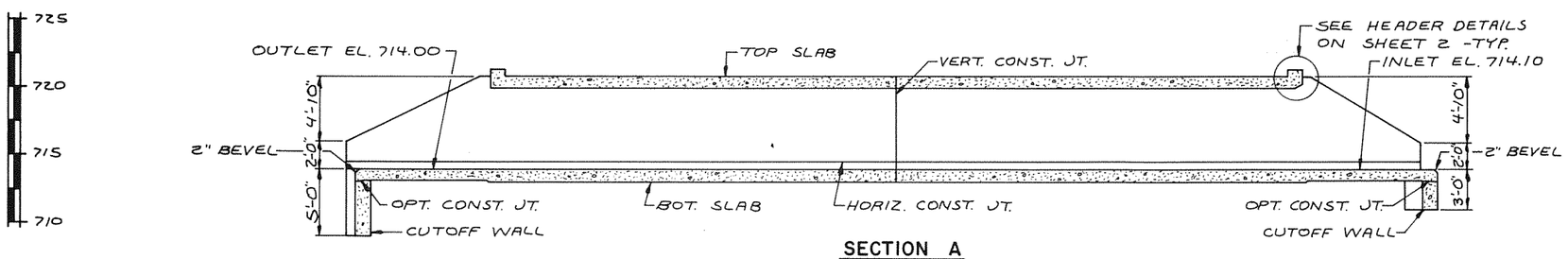

SECTION A

GENERAL NOTES

DRAWINGS SHALL NOT BE SCALED.

BAR STEEL REINFORCEMENT SHALL BE EMBEDDED 2" CLEAR UNLESS SHOWN OR NOTED OTHERWISE.

THE FIRST DIGIT OF A THREE DIGIT BAR NO. SIGNIFIES THE BAR SIZE.

JOINT FILLER SHALL CONFORM TO THE REQUIREMENTS OF A.A.S.H.T.O. DESIGNATION M153, TYPE I, II OR III OR A.A.S.H.T.O. DESIGNATION M213.

THE EXISTING GROUND LINE WAS USED AS THE UPPER LIMITS OF EXCAVATION.

ALL SPACES EXCAVATED AND NOT OCCUPIED BY THE NEW STRUCTURE SHALL BE BACKFILLED WITH GRANULAR BACKFILL TO THE ORIGINAL GROUND LINE WITHIN THE LENGTH OF THE BOX.

THE CONCRETE IN THE CUTOFF WALLS MAY BE PLACED UNDERWATER IF THE EXCAVATION CANNOT BE DEWATERED.

DESIGN DATA

LIVE LOAD: HS-20 MODIFIED

EARTH LOAD: 6'-0"

ALLOWABLE DESIGN STRESSES:

CONCRETE MASONRY ..... f'_c = 3,500 p.s.i.

HIGH-STRENGTH BAR STEEL REINFORCEMENT (GRADE 60) ..... f_y = 60,000 p.s.i.

HYDRAULIC DATA:

DRAINAGE AREA = 11.3 SQ.MI.

WATERWAY AREA = 114 SQ.FT.

V = 10.3 f.p.s.

Q_{100} = 1000 c.f.s.

HIGH WATER$_{100}$ EL. 721.27

TRAFFIC DATA:

A.D.T. = 800 (1981)

A.D.T. = 1150 (2002)

R.D.S. = SS

TOTAL ESTIMATED QUANTITIES

BID ITEMS	AMOUNT
REMOVING OLD BRIDGE STA. 102+80	1 L.S.
EXCAVATION FOR STRUCTURES, BRIDGES B-44-101	1 L.S.
CONCRETE MASONRY, BRIDGES	149 C.Y.
HIGH-STRENGTH BAR STEEL REINFORCEMENT, BRIDGES	12,180 LB.
HEAVY RIPRAP	60 C.Y.
NON-BID ITEMS	
FILLER	3/4" SIZE
POLYVINYL CHLORIDE WATERSTOP	25 L.F.

LIST OF DRAWINGS

1. GENERAL PLAN ..... X 68538
2. BOX AND WING DETAILS ..... X 68539
3. APRON DETAILS ..... X 68540
4. BILL OF BARS AND DETAILS ..... X 68541
5. SUBSURFACE EXPLORATION ..... X 68542

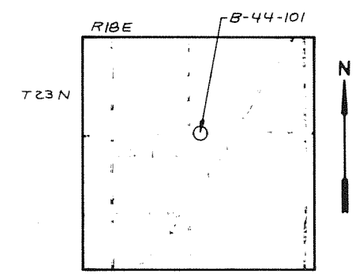

LAYOUT

No	Date	Revision	By

PLANS PREPARED BY
OWEN AYRES & ASSOCIATES
ARCHITECTS / ENGINEERS
EAU CLAIRE, WISCONSIN

STATE OF WISCONSIN
DEPARTMENT OF TRANSPORTATION

STRUCTURE B-44-101

C.T.H. "EE" OVER DUCK CR. TRIBUTARY

County OUTAGAMIE		Town ~~City/Village~~ ONEIDA	
Design Spec. A.A.S.H.T.O. '81		Load HS-20 (MOD.)	Const. Spec. 1981
Designed By K.B.H.	Design Checked D.H.P.	Drawn By G.L.D.	Plans Checked KBH

Approved Stanley W. Woods, Chief Bridge Engineer — Date 11-17-82

GENERAL PLAN

SHEET 1 OF 5

X68538

TELEDYNE POST

STATE PROJECT NUMBER	SHEET NO.
6004-1-71	8.1

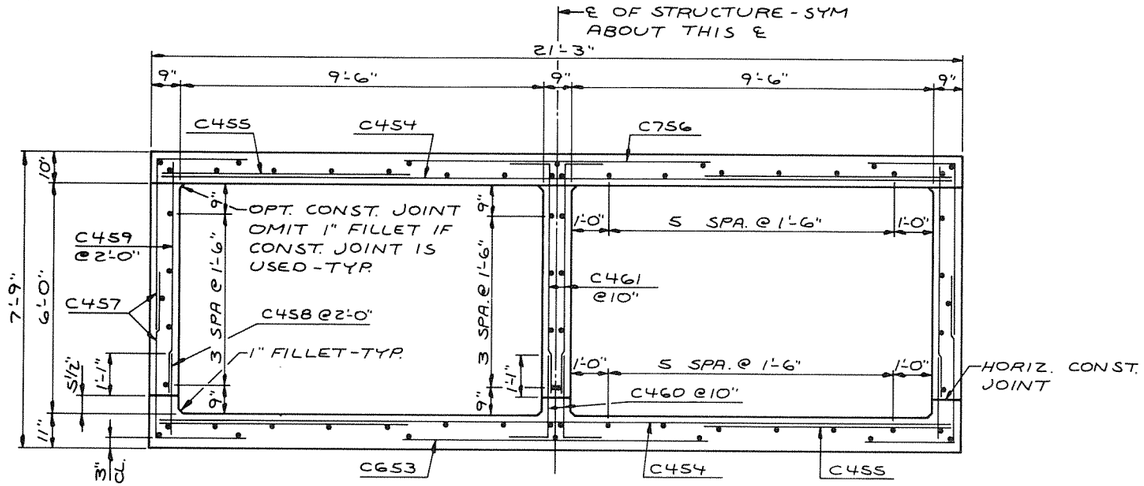

NOTE: ALL LONGITUDINAL BARS IN BOX ARE C452

TYP. SECTION THRU BOX

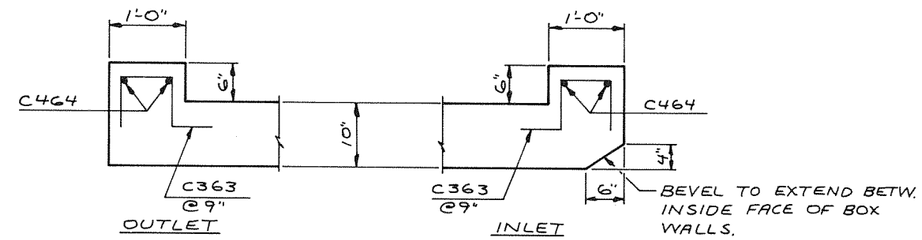

HEADER DETAILS

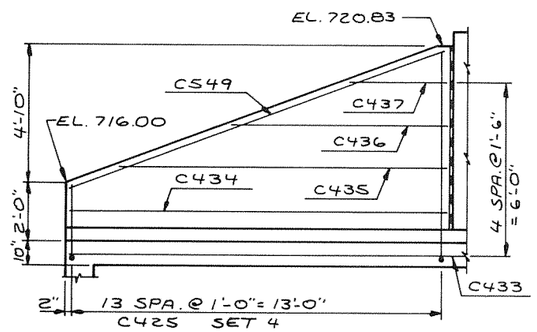

ELEVATION – WING 2

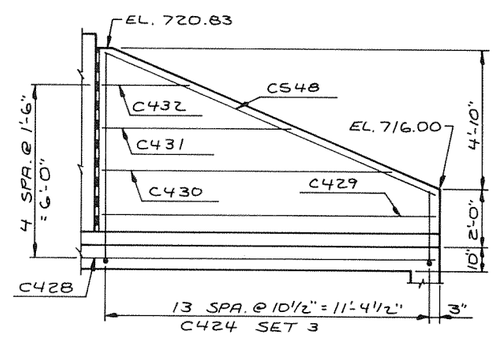

ELEVATION – WING 1

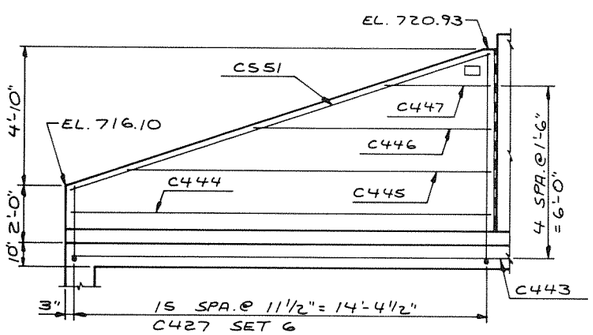

ELEVATION – WING 4

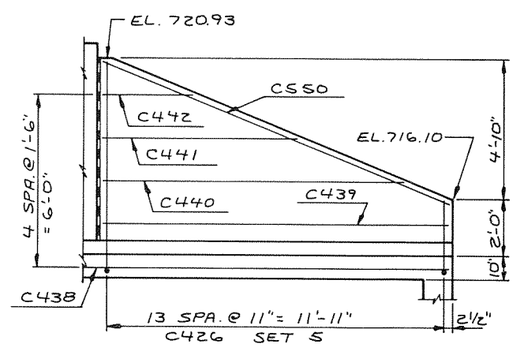

ELEVATION – WING 3

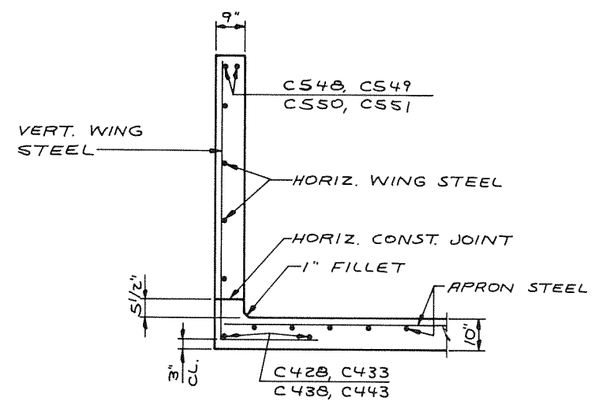

TYP. SECTION THRU WING

No.	Date	Revision	By

PLANS PREPARED BY
OWEN AYRES & ASSOCIATES
CONSULTING ENGINEERS
EAU CLAIRE, WISCONSIN

STATE OF WISCONSIN
DEPARTMENT OF TRANSPORTATION

STRUCTURE B-44-101

Const. Spec 1981 | Drawn By G.L.D. | Plans Checked KBH

BOX AND WING DETAILS

SHEET 2 OF 5

X 68539

STATE PROJECT NUMBER	SHEET NO.
6004-1-71	8.2

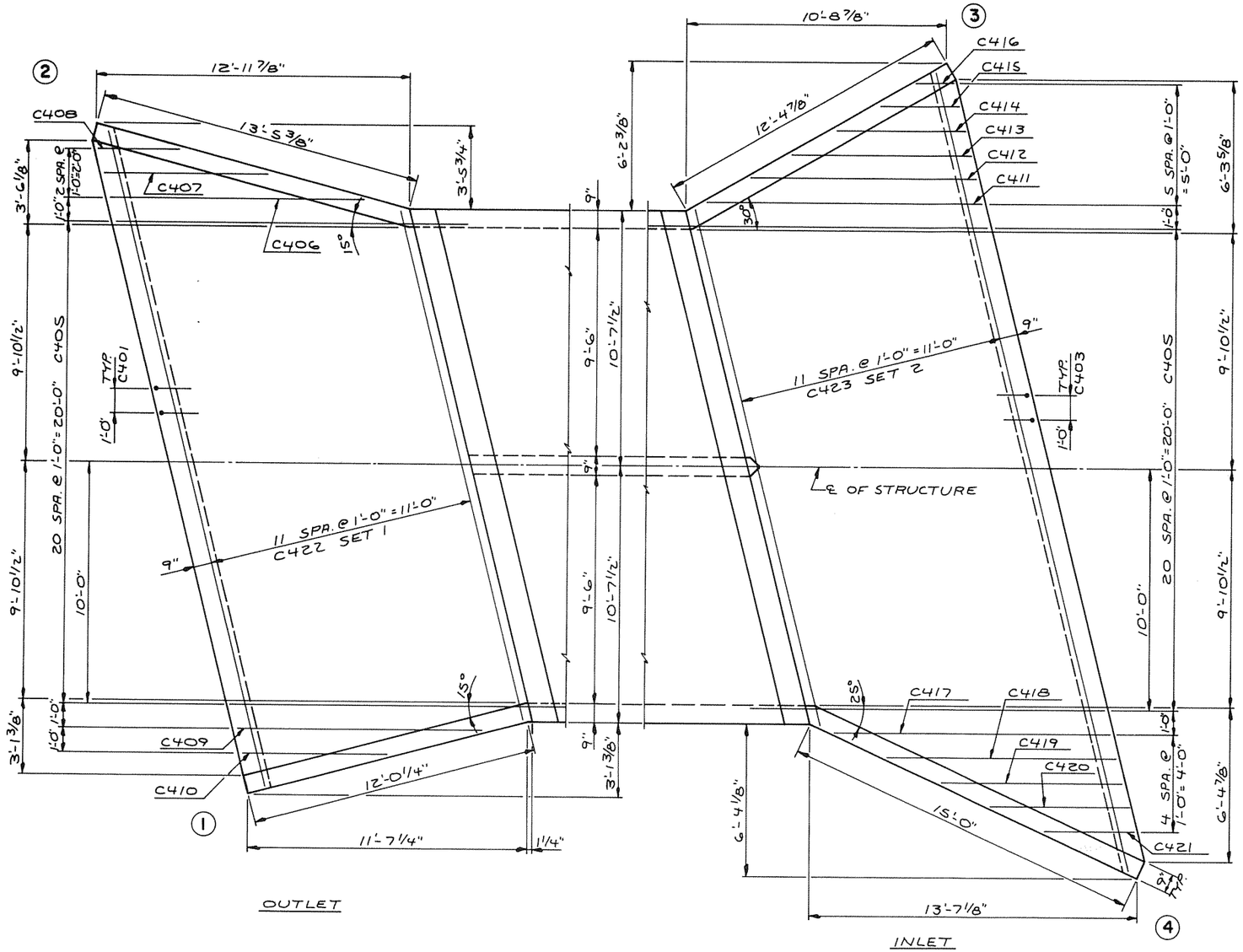

PLAN OF APRONS

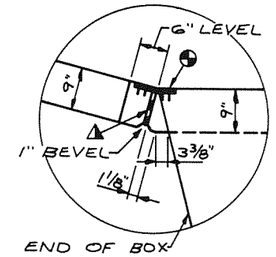

WING 2

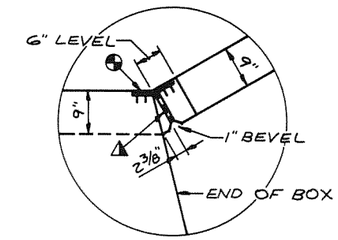

WING 3

NOTE: DO NOT RUN ANY BAR STEEL REINF. THRU JOINT FILLER.

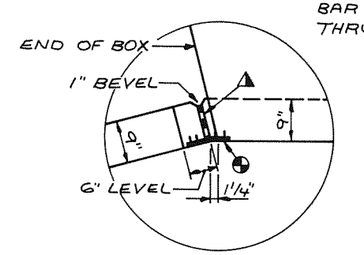

WING 1

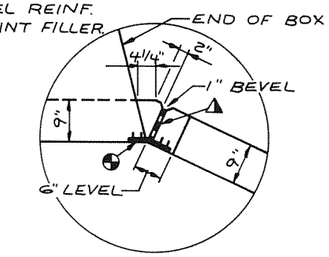

WING 4

CORNER DETAILS

◐ POLYVINYL CHLORIDE WATERSTOP - EXTEND FROM HORIZ. CONST. JT. TO TOP OF WALL. (FLUSH WITH FACE OF CONCRETE.)

▲ 3/4" FILLER TO EXTEND FROM HORIZ. CONST. JT. TO TOP OF WING.

No	Date	Revision	By

PLANS PREPARED BY
OWEN AYRES & ASSOCIATES
CONSULTING ENGINEERS
EAU CLAIRE, WISCONSIN

STATE OF WISCONSIN
DEPARTMENT OF TRANSPORTATION

STRUCTURE B-44-101

Const. Spec 1981 | Drawn By G.L.D. | Plans Checked KAH

APRON DETAILS

SHEET 3 OF 5

X 68540

STATE PROJECT NUMBER	SHEET NO.
6004-1-71	8.3

BILL OF BARS

BAR NO.	NO. REQ'D.	LENGTH	BENT	CUT DIAG.	12,180# LOCATION
C401	28	6-1	X		CUTOFF WALL-OUTLET
C402	5	27-1			" " "
C403	34	4-1	X		" " INLET
C404	3	33-5			" " "
C405	42	14-7			APRON-OUTLET & INLET
C406	1	10-9			" "
C407	1	7-3			" "
C408	1	3-9			" "
C409	1	10-7			" "
C410	1	6-7			" "
C411	1	11-4			" INLET
C412	1	9-4			" "
C413	1	7-4			" "
C414	1	5-4			" "
C415	1	3-4			" "
C416	1	1-4			" "
C417	1	11-4			" "
C418	1	9-5			" "
C419	1	7-6			" "
C420	1	5-7			" "
C421	1	3-8			" "
C422	6	49-10		X	" OUTLET SET 1
C423	6	56-4		X	" INLET " 2
C424	7	18-4	X	X	WING 1-VERT. " 3
C425	7	18-4	X	X	" 2 " " 4
C426	7	18-4	X	X	" 3 " " 5
C427	8	18-4	X	X	" 4 " " 6
C428	2	13-10			" 1-HORIZ.
C429	1	11-7			" 1 "
C430	1	10-4			" 1 "
C431	1	6-8			" 1 "
C432	1	3-0			" 1 "
C433	2	15-3			" 2 "
C434	1	13-0			" 2 "
C435	1	11-8			" 2 "
C436	1	7-6			" 2 "
C437	1	3-4			" 2 "
C438	2	14-3			" 3 "
C439	1	12-0			" 3 "
C440	1	10-8			" 3 "
C441	1	6-8			" 3 "
C442	1	2-8			" 3 "
C443	2	16-10			" 4 "
C444	1	14-7			" 4 "
C445	1	12-8			" 4 "
C446	1	8-2			" 4 "
C447	1	3-8			" 4 "
C548	2	12-6			" 1-DIAG.
C549	2	13-10			" 2 "
C550	2	12-11			" 3 "
C551	2	15-4			" 4 "
C452	128	29-8			BOX-LONG.
C653	80	8-0			" TRANS. BOT. SLAB
C454	120	21-6			" " TOP & BOT. SLAB
C455	240	6-9			" " " " " "
C756	60	8-0			" " " SLAB
C457	288	6-8	X		" EXT. CORNERS
C458	62	2-3			" " WALLS DOWELS
C459	62	6-2			" " " VERT.
C460	144	3-2	X		" INT. " DOWELS
C461	144	7-1	X		" " " VERT.
C562	60	4-0			" VERT. CONST. JT.
C363	60	2-3	X		" HEADER
C464	4	21-6			" "

BENDING DIMENSIONS ARE OUT TO OUT OF BARS.

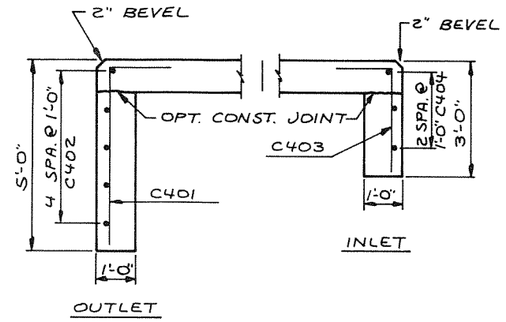

SECTION THRU CUTOFF WALL

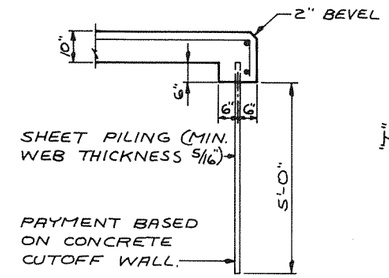

ALTERNATE SECTION THRU CUTOFF WALL

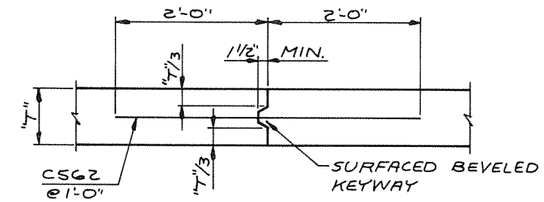

VERT. CONST. JOINT
(ALL WALLS AND SLABS)

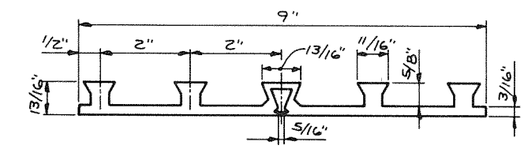

POLYVINYL CHLORIDE WATERSTOP DETAIL

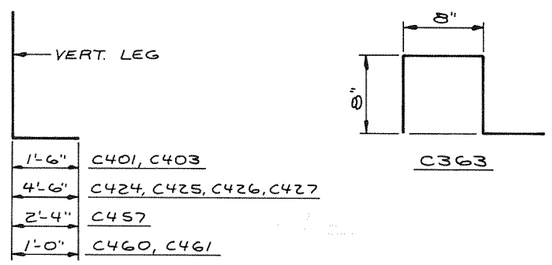

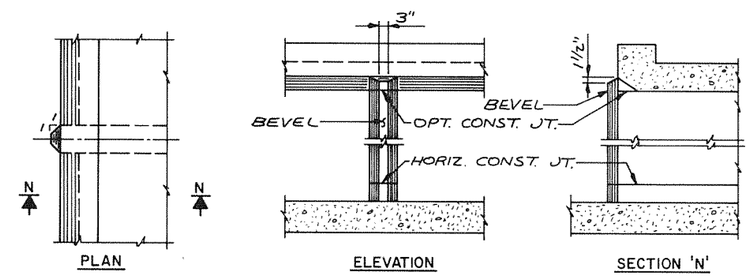

INLET NOSE DETAIL

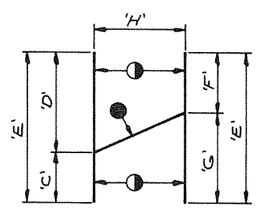

H-NUMBER OF BARS BEFORE CUTTING.
◑-BUNDLE AND MARK CUT BARS WITH BAR AND SET NUMBER. BENT BARS USED IN A CUTTING DIAGRAM SHALL BE BENT AFTER CUTTING.
●-MARK AND CUT ALL BARS ALONG THIS LINE. MAKE ALL CUTS NORMAL TO BAR AXIS.

CUTTING DIAGRAM

BAR NO.		'C'	'D'	'E'	'F'	'G'	'H'	SETS
C422	SET 1	21-8	28-2	49-10	25-2 1/2	24-7 1/2	6	1
C423	SET 2	21-8	34-8	56-4	28-9	27-7	6	1
C424	SET 3	6-10	11-6	18-4	9-4	9-0	7	1
C425	SET 4	6-10	11-6	18-4	9-4	9-0	7	1
C426	SET 5	6-10	11-6	18-4	9-4	9-0	7	1
C427	SET 6	6-10	11-6	18-4	9-4	9-0	8	1

No.	Date	Revision	By

PLANS PREPARED BY
OWEN AYRES & ASSOCIATES
CONSULTING ENGINEERS
EAU CLAIRE, WISCONSIN

STATE OF WISCONSIN
DEPARTMENT OF TRANSPORTATION

STRUCTURE B-44-101

Const. Spec 1981 | Drawn By G.L.D. | Plans Checked KBH

BILL OF BARS AND DETAILS

SHEET 4 OF 5

X68541

TELEDYNE POST

STATE PROJECT NUMBER	SHEET NO.
6004-1-71	8.4

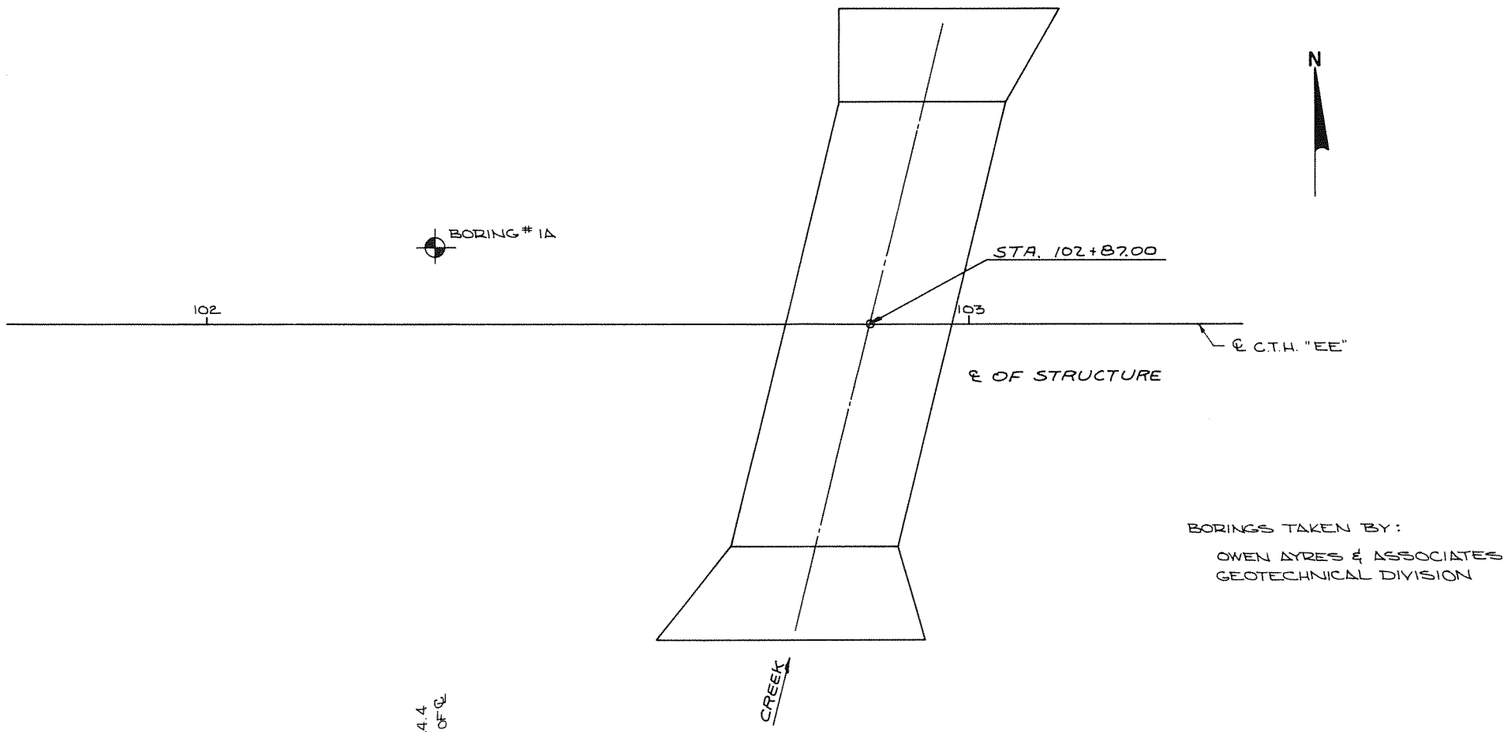

BORINGS TAKEN BY:

OWEN AYRES & ASSOCIATES
GEOTECHNICAL DIVISION

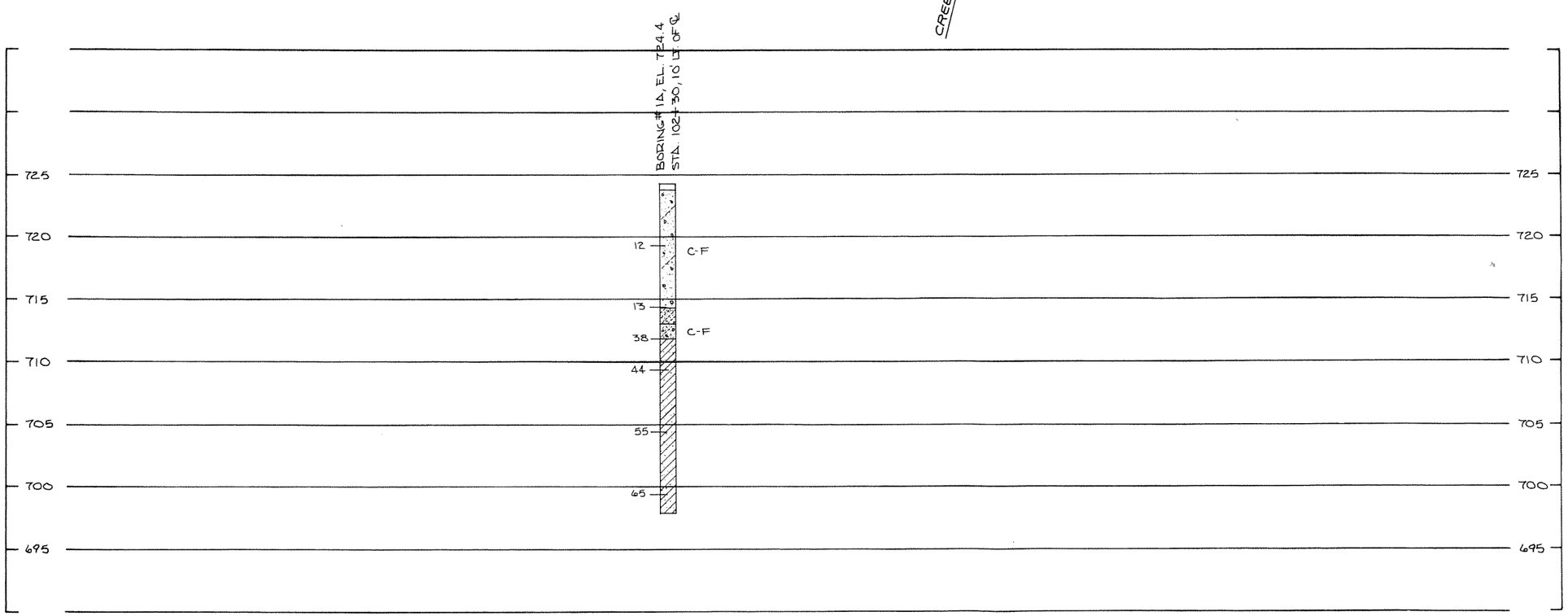

ABBREVIATIONS

F — Fine M — Medium C — Coarse
Ws — Weathered So — Sound

MATERIAL SYMBOLS

Topsoil, Silt, Sandstone, Sand, Peat, Limestone, Gravel, Clay, Igneous Rock

LEGEND OF PROBING

95/6=95 Blows for 6" Penetration
Probing taken with a 350# wt. Falling 18" on a 2" O. D. Point.

Probing No.
Sta.
Elevation
7 Average Blows Per Foot
Refusal 95/6

LEGEND OF BORING

Boring No.
Elev.
Sta.
Unconfined Strength — 7.7
7
Blows Per Ft. Using 140# Wt. Falling 30"
Wash Sample
Shelby Tube — S. T.
Ground Water Elevation
No Ground Water Observed Above This Elevation
Sandy Gravel
F.
Boulders or Cobbles
Sand
Silty Clay
So
Limestone

Unless otherwise specified, the blows per foot at the locations indicated are based on driving a 2" O. D. x 1.4" I. D. split spoon sampler with a 140# hammer having a free fall of 30". The blow count is taken in undisturbed soil immediately below a cased or open hole eliminating side friction on the drive pipe.

SUBSURFACE EXPLORATION FOR FOUNDATION DESIGN AND BIDDERS INFORMATION

To obtain relative data concerning the character of material in and upon which the foundation might be built, borings and/or soundings were made at points approximately as indicated on this drawing. The data presented herein represents the findings of the subsurface explorations made. However, because the depths investigated are limited and the area of the borings and/or soundings is very small in relation to the entire area, the Division of Highways does not warrant conditions below the depths investigated or that the classification of material encountered in these investigations is necessarily typical of the entire site.

No.	Date.	Revision	By

STATE OF WISCONSIN
DEPARTMENT OF TRANSPORTATION
DIVISION OF HIGHWAYS

STRUCTURE B-44-101

Const. Spec.	Drawn By	Plans Checked
1981	D.V.H.	KBH

SUBSURFACE EXPLORATION

SHEET 5 OF 5

X68542

STATE PROJECT NUMBER	SHEET NO.
6004-1-71	8.5

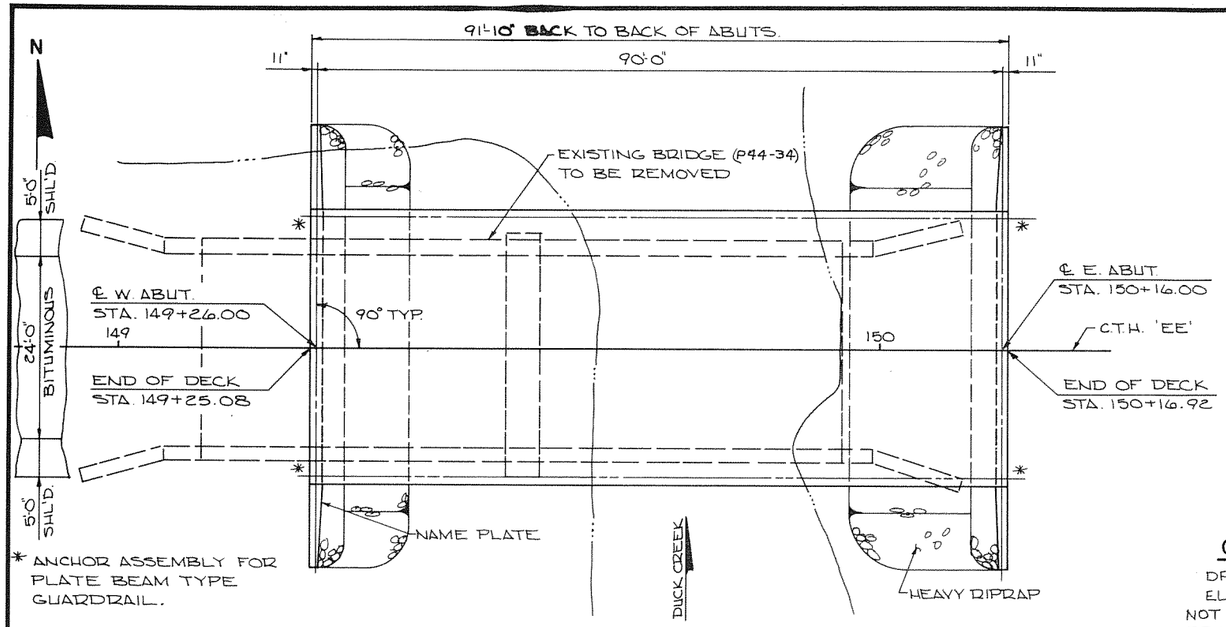

PLAN

(1 SPAN 54" PRESTRESSED GIRDER)

LIST OF DRAWINGS

1. GENERAL PLAN ____ X68928
2. SUBSURFACE EXPLORATION ____ X68929
3. ABUTMENTS ____ X68930
4. 54" PRESTRESSED GIRDER DETAILS ____ X68931
5. SUPERSTRUCTURE ____ X68932
6. TUBULAR RAILING TYPE "F" ____ X68933

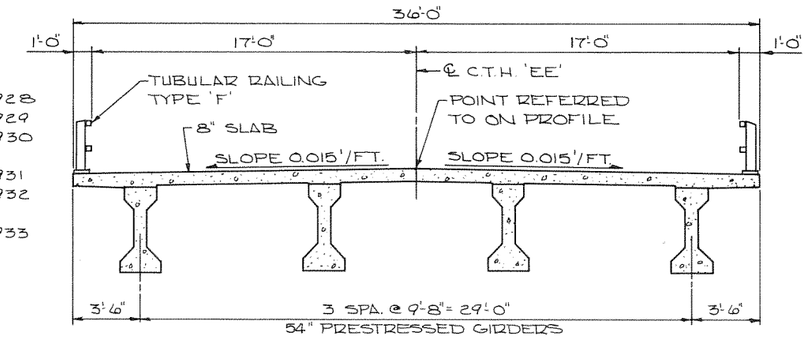

CROSS SECTION THRU ROADWAY

GENERAL NOTES

DRAWINGS SHALL NOT BE SCALED.

ELASTOMERIC BEARING PADS NEED NOT BE INDIVIDUALLY MOLDED PROVIDED THE CUT EDGES ARE SMOOTH AND TRUE.

THE SLOPE OF THE FILL IN FRONT OF THE ABUTMENTS SHALL BE COVERED WITH HEAVY RIPRAP TO THE EXTENT SHOWN ON THIS SHEET AND IN THE ABUTMENT DETAILS.

BAR STEEL REINFORCEMENT SHALL BE EMBEDDED 2" CLEAR UNLESS OTHERWISE SHOWN OR NOTED.

THE FIRST DIGIT OF A THREE DIGIT BAR NO. SIGNIFIES THE BAR SIZE.

FILLER SHALL CONFORM TO THE REQUIREMENTS OF A.A.S.H.T.O. DESIGNATION: M153, TYPE I, II OR III OR A.A.S.H.T.O. DESIGNATION: M213.

PILE SPLICES, IF USED, SHALL BE MADE BY A CERTIFIED WELDER.

DESIGN DATA

LIVE LOAD: HS-20 (STRUCTURE IS DESIGNED FOR A FUTURE WEARING SURFACE OF 20#/S.F.)

RATINGS: INVENTORY = HS-24 OPERATING = HS-44

ALLOWABLE DESIGN STRESSES:

CONCRETE MASONRY { SLAB ____ f'c = 4,000 p.s.i.
ALL OTHER ____ f'c = 3,500 p.s.i.

HIGH STRENGTH BAR STEEL REINFORCEMENT (GRADE 60) ____ fy = 60,000 p.s.i.

PRESTRESSED GIRDER
CONCRETE MASONRY ____ f'c = 6,000 p.s.i.
STRANDS - 1/2" ø WITH ULTIMATE TENSILE STRENGTH OF ____ 270,000 p.s.i.

HYDRAULIC DATA:
DRAINAGE AREA = 53 SQ. MI.
WATERWAY AREA = 601 SQ. FT.
V = 4.6 f.p.s.
Q_{100} = 2750 c.f.s.
HIGH WATER $_{100}$ EL. 694.1 OVERTOPPING ROAD = N/A

FOUNDATION DATA:
PLACE ABUTMENTS ON HP 10×42 STEEL PILING. DRIVE TO 55 TONS/PILE MINIMUM BEARING VALUE. EST. LENGTH 35'-0".

TRAFFIC DATA:
A.D.T. = 800 (1981)

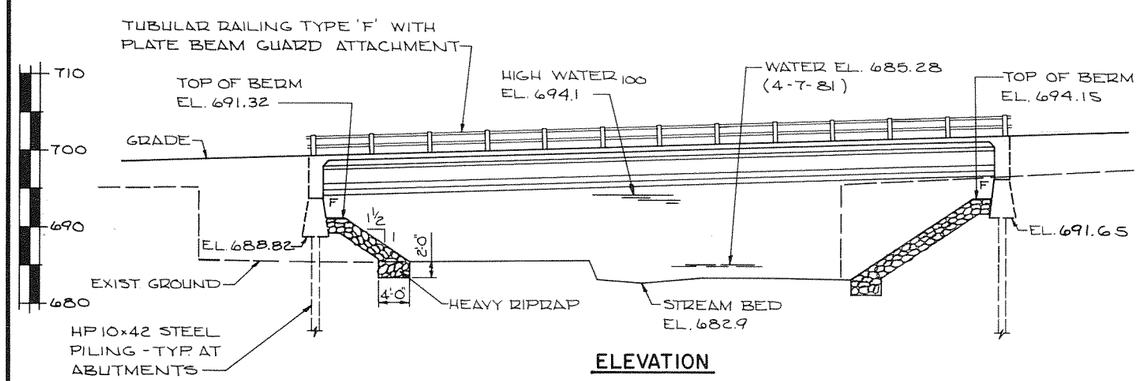

ELEVATION

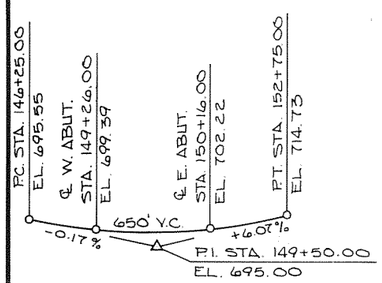

PROFILE GRADE LINE

C.T.H. 'EE'

TOTAL ESTIMATED QUANTITIES

BID ITEMS	UNIT	W. ABUT.	E. ABUT.	SUPER.	TOTAL
REMOVING OLD BRIDGE STA. 149+70	L.S.	—	—	—	1
EXCAVATION FOR STRUCTURES, BRIDGES	L.S.	—	—	—	1
PRESTRESSED GIRDER, I TYPE, 54 INCH	L.F.	—	—	364	364
HIGH-STRENGTH BAR STEEL REINFORCEMENT, BRIDGES	LB.	1,950	1,950	22,160	26,060
BEARING PAD, ELASTOMERIC	S.F.	—	—	12	12
STEEL PILING, DELIVERED AND DRIVEN, HP 10 INCH × 42 POUND	L.F.	210	210	—	420
TUBULAR RAILING, TYPE "F" STRUCTURE B-44 102	L.S.	—	—	—	1
HEAVY RIPRAP	C.Y.	40	70	—	110
CONCRETE MASONRY, BRIDGES	C.Y.	26.2	26.2	106.6	159
NON-BID ITEMS					
FILLER	SIZE	—	—	—	1/2 & 3/4
POLYVINYL CHLORIDE WATERSTOP	L.F.	47	47	—	94

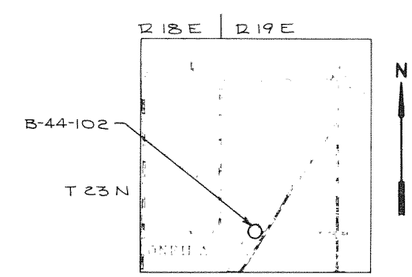

LAYOUT

No	Date	Revision	By

PLANS PREPARED BY
OWEN AYRES & ASSOCIATES
ARCHITECTS / ENGINEERS
EAU CLAIRE, WISCONSIN

STATE OF WISCONSIN
DEPARTMENT OF TRANSPORTATION

STRUCTURE B-44-102

C.T.H. 'EE' OVER DUCK CREEK

County OUTAGAMIE		Town/~~City/Village~~ ONEIDA	
Design Spec. A.A.S.H.T.O. '81		Load HS-20	Const. Spec. 1981
Designed By K.B.H.	Design Checked D.H.P.	Drawn By D.V.H.	Plans Checked KBH

Approved Stanley W. Woods, Chief Bridge Engineer — 11-17-82 Date

GENERAL PLAN

SHEET 1 OF 6

X68928

STATE PROJECT NUMBER	SHEET NO.
6004-1-71	8.6

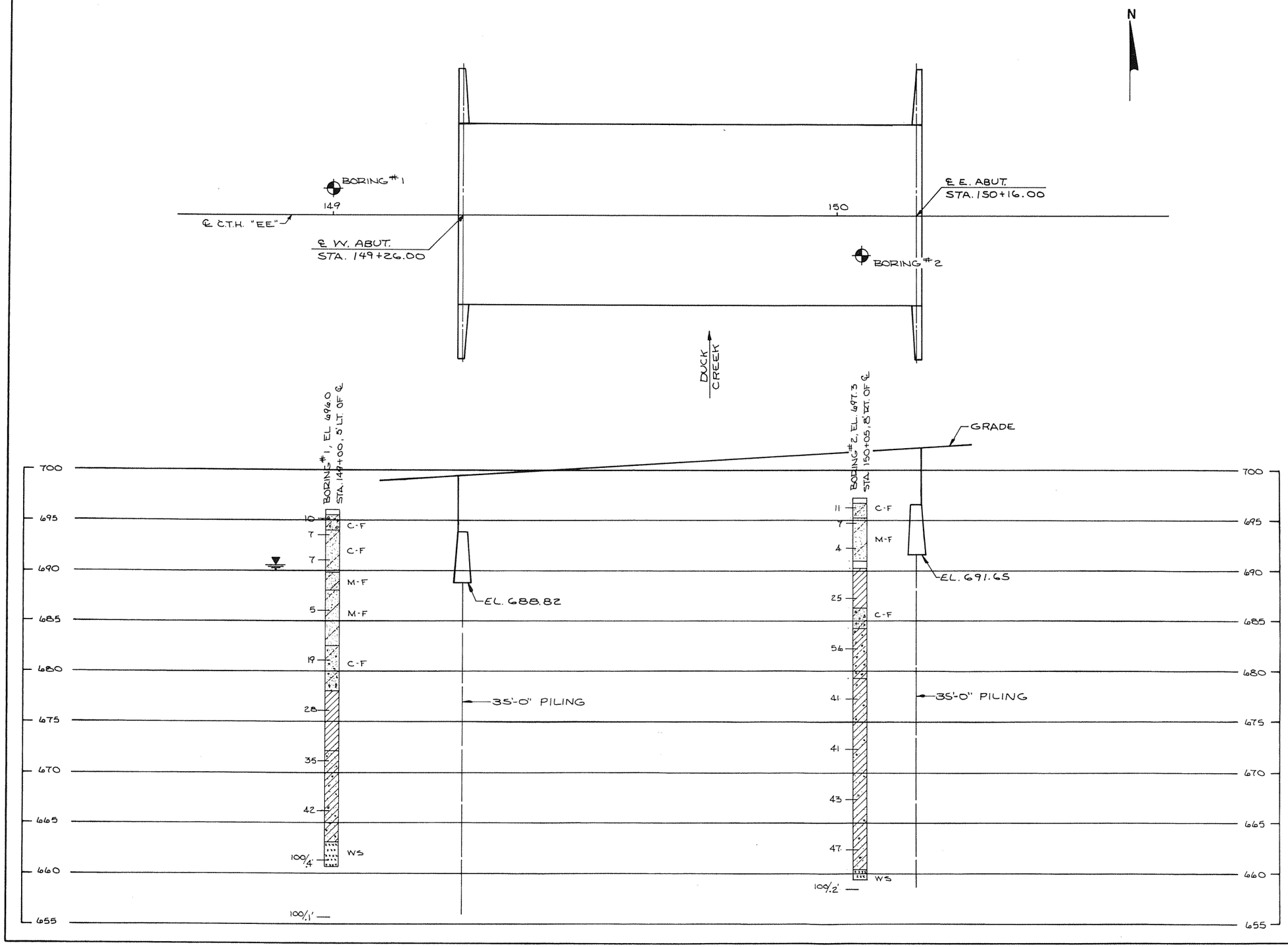

ABBREVIATIONS

F — Fine M — Medium C — Coarse
Ws — Weathered So — Sound

MATERIAL SYMBOLS

Topsoil, Silt, Sandstone, Sand, Peat, Limestone, Gravel, Clay, Igneous Rock

LEGEND OF PROBING

95/6=95 Blows for 6" Penetration
Probing taken with a 350# wt. Falling 18" on a 2" O. D. Point.

Probing No.
Sta.
Elevation
7 Average Blows Per Foot
Refusal 95, 6

LEGEND OF BORING

Boring No.
Elev.
Sta.
Unconfined Strength — 7.7
7
Blows Per Ft. Using 140# Wt. Falling 30"
Wash Sample
Shelby Tube — S. T.
Ground Water Elevation
No Ground Water Observed Above This Elevation
Sandy Gravel
F.
Boulders or Cobbles
Sand
Silty Clay
So
Limestone

Unless otherwise specified, the blows per foot at the locations indicated are based on driving a 2" O. D. x 1.4" I. D. split spoon sampler with a 140# hammer having a free fall of 30". The blow count is taken in undisturbed soil immediately below a cased or open hole eliminating side friction on the drive pipe.

SUBSURFACE EXPLORATION FOR FOUNDATION DESIGN AND BIDDERS INFORMATION

To obtain relative data concerning the character of material in and upon which the foundation might be built, borings and/or soundings were made at points approximately as indicated on this drawing. The data presented herein represents the findings of the subsurface explorations made. However, because the depths investigated are limited and the area of the borings and/or soundings is very small in relation to the entire area, the Division of Highways does not warrant conditions below the depths investigated or that the classification of material encountered in these investigations is necessarily typical of the entire site.

No.	Date.	Revision	By

STATE OF WISCONSIN
DEPARTMENT OF TRANSPORTATION
DIVISION OF HIGHWAYS

STRUCTURE B-44-102

Const. Spec	1981	Drawn By	D.V.H.	Plans Checked	KBH

SUBSURFACE EXPLORATION

SHEET 2 OF 6

X68929

NOTE: SEAL ALL EXPOSED HORIZONTAL **AND VERTICAL** SURFACES OF 1/2" FILLER WITH NON-STAINING GRAY NON-BITUMINOUS JOINT SEALER. (1" DEEP AND HOLD 1/8" BELOW SURFACE OF CONCRETE.)

STATE PROJECT NUMBER	SHEET NO.
6004-1-71	8.7

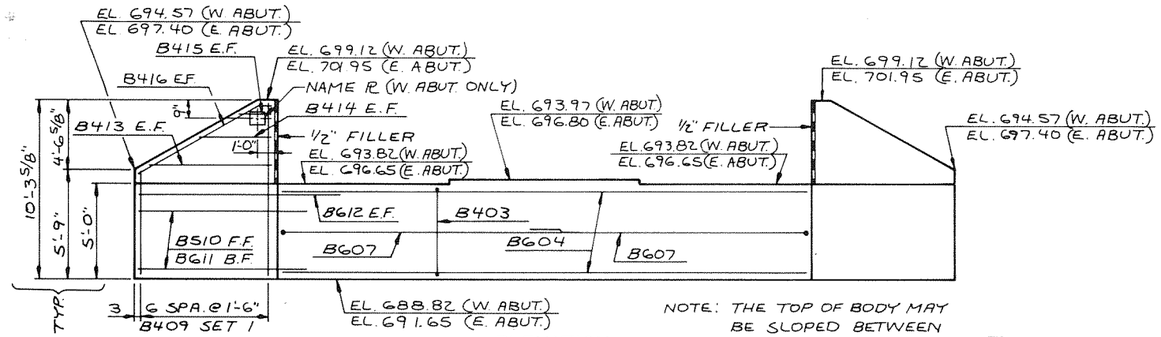

ELEVATION

(WEST ABUT. LOOKING WEST)
(EAST ABUT. LOOKING EAST)

NOTE: THE TOP OF BODY MAY BE SLOPED BETWEEN THE LEVEL BEAM SEAT AREAS.

◪ VERT. P.C.W. TO EXTEND FROM BRIDGE SEAT TO TOP OF WING. SPLICE AT JUNCTION WITH HORIZ. P.C.W. (1/8"x12" BUTYL RUBBER SHEETING BONDED WITH APPROVED ADHESIVE MAY BE SUBSTITUTED FOR VERT. P.C.W. LAP 3" OVER HORIZ. P.C.W.)

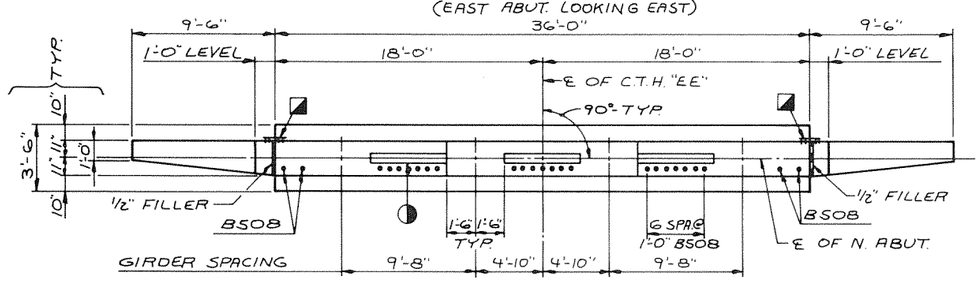

PLAN

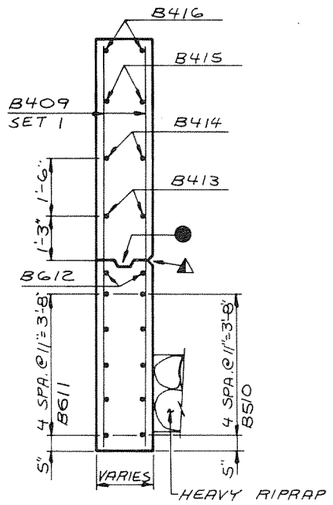

SECTION THRU WING

BILL OF BARS

BAR NO.	NO. REQ'D.	LENGTH	BENT	CUT. DIAG.	1,950# LOCATION
B401	6	28-0	X		BODY @ PILES
B402	12	2-3			" " "
B403	88	8-1	X		" VERT.
B604	6	35-8			" HORIZ.
B505	12	11-1	X		" " @WINGS
B406	6	18-6			" "
B607	6	20-10	X		" "
B508	25	2-0			" DOWELS
B409	14	15-5		X	WINGS - VERT. E.F.
B510	10	10-10			" HORIZ. F.F.
B611	10	11-1			" " B.F.
B612	4	12-7			" " E.F.
B413	4	8-2			" " E.F.
B414	4	5-2			" " E.F.
B415	4	2-2			" " E.F.
B416	4	10-1	X		" DIAG. E.F.

BENDING DIMENSIONS ARE OUT TO OUT OF BARS.

MARK AND CUT ALL BARS ALONG THIS LINE. MAKE ALL CUTS NORMAL TO BAR AXIS.

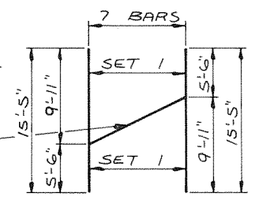

B409 - 4 SET 1 REQ'D.

CUTTING DIAGRAM

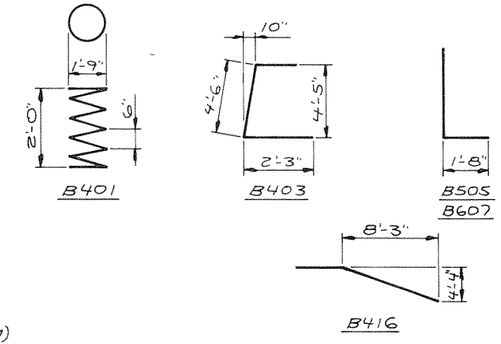

B.F. DENOTES BACK FACE.
F.F. DENOTES FRONT FACE.
E.F. DENOTES EACH FACE.

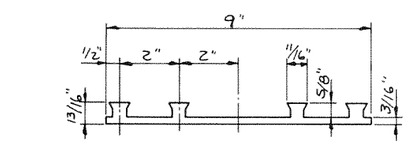

POLYVINYL CHLORIDE WATERSTOP DETAIL

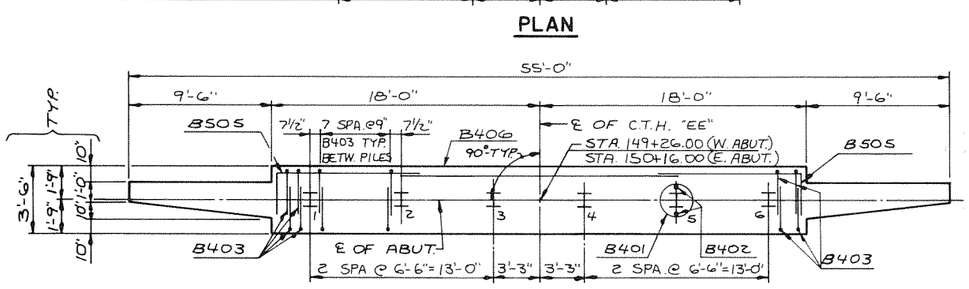

PILE LAYOUT

● KEYED CONST. JOINT FORMED BY A SURFACED BEVELED 2"x6".

● OPT. KEYED CONST. JT. FORMED BY A SURFACED BEVELED 2"x6".

▲ 3/4" 'V' GROOVE IN FRONT FACE OF WING WALL. NOT REQUIRED IF CONST. JOINT IS NOT USED.

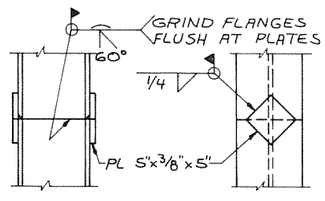

HP 10x42 SPLICE DETAIL

B508 BARS MAY BE PLACED AFTER ABUT. IS POURED BUT BEFORE CONC. HAS SET. IMBED BAR 1'-0".

ALL HORIZ. BARS IN BODY ARE B604 UNLESS SHOWN OR NOTED OTHERWISE.

HP 10x42 STEEL PILING DRIVEN TO 55 TONS/PILE MINIMUM BEARING VALUE. EST. LENGTH 35'-0".

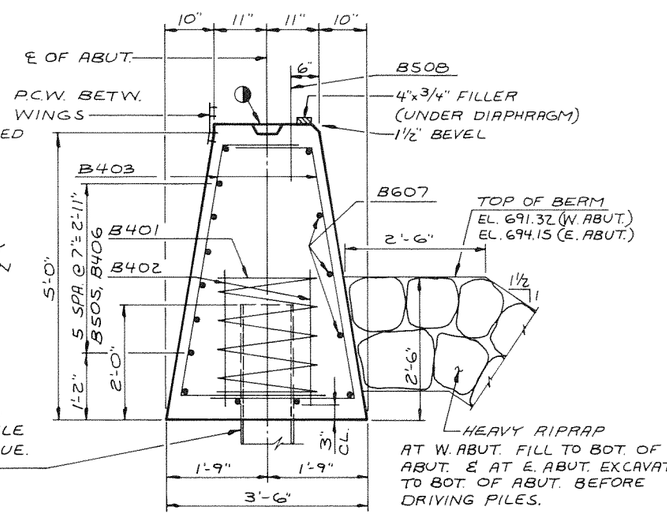

SECTION THRU BODY

No.	Date	Revision	By

PLANS PREPARED BY
OWEN AYRES & ASSOCIATES
CONSULTING ENGINEERS
EAU CLAIRE, WISCONSIN

STATE OF WISCONSIN
DEPARTMENT OF TRANSPORTATION

STRUCTURE B-44-102

Const. Spec 1981 | Drawn By G.L.D. | Plans Checked

ABUTMENTS

SHEET 3 OF 6

X68930

STATE PROJECT NUMBER	SHEET NO.
6004-1-71	8.8

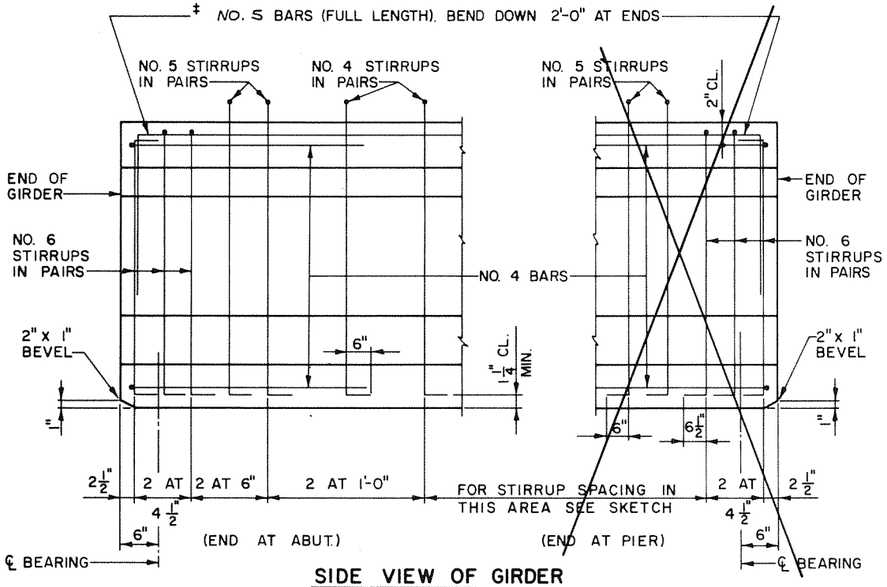

SIDE VIEW OF GIRDER

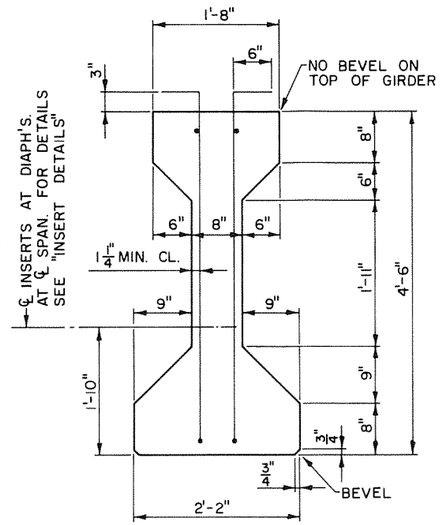

SECTION THRU GIRDER

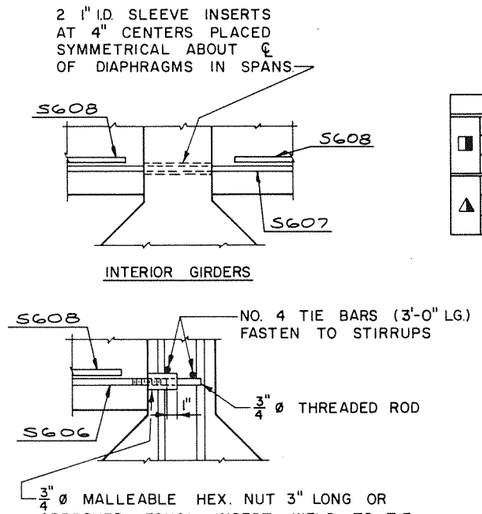

INSERT DETAILS

DEFLECTION DATA

	CAMBER	SPAN	SPAN	SPAN
◨	* A = PRESTRESS CAMBER	2 1/8"		
	* B = DEAD LOAD DEFLECTION	1"		
	* C = RESIDUAL CAMBER	1 1/8"		
△	* A = PRESTRESS CAMBER	1 7/8"		
	* B = DEAD LOAD DEFLECTION	1"		
	* C = RESIDUAL CAMBER	7/8"		

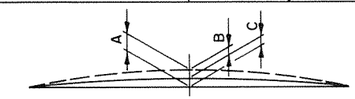

* PRESTRESS CAMBER AND DEAD LOAD DEFLECTION DATA SHOWN ARE THEORETICAL AND MAY VARY WITH CONCRETE STRENGTH, VARIABLE PRESTRESSING CONDITIONS AND PRESTRESS LOSSES.

MINIMUM CYLINDER STRENGTH OF CONCRETE AT TIME OF TRANSFER OF PRESTRESS FORCE f'ci (p.s.i.)

GIRDER TYPE		SPAN	SPAN	SPAN
DRAPED PATTERN	◨	4800		
DRAPED PATTERN	△	4800		
SPREAD PATTERN		—		

GENERAL NOTES

TOP OF GIRDERS TO BE ROUGH FLOATED AND BROOMED TRANSVERSELY FOR BONDING TO SLAB.

THE GIRDER MANUFACTURER SHALL PROVIDE A SUITABLE LIFTING DEVICE FOR HANDLING AND ERECTING THE GIRDERS.

ALL GIRDERS SHALL BE CAST FULL LENGTH AS SHOWN.

STRANDS SHALL BE FLUSH WITH END OF GIRDERS.

PRESTRESSING STRANDS SHALL HAVE AN ULTIMATE STRENGTH OF 270,000 p.s.i.

ALL NON PRESTRESSED BAR STEEL REINFORCEMENT SHALL BE GRADE 60.

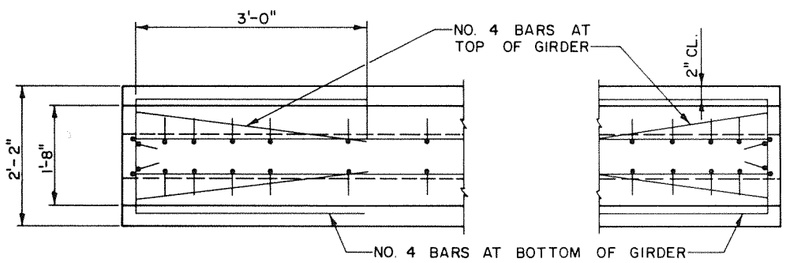

TOP VIEW OF GIRDER

‡ TOP LONG. BARS IN GIRDERS MAY BE SPLICED BY USING 35 BAR DIAMETER LAPS. PLACE ONE LAP AT ℄ OF GIRDER IF LENGTH IS < 70'-0". PLACE LAPS AT THE 1/3 POINTS OF GIRDER IF LENGTH IS ≥ 70'-0".

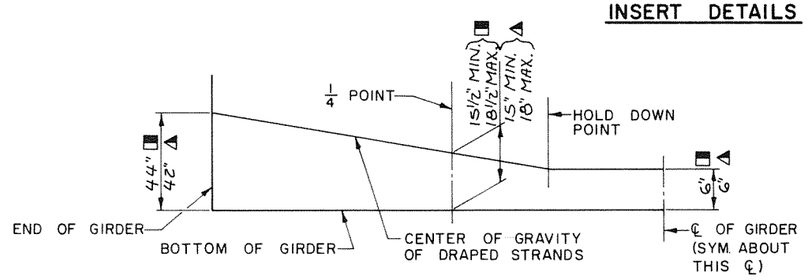

DRAPED STRAND PROFILE

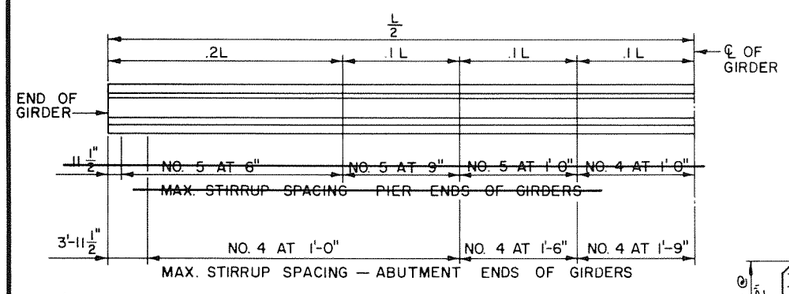

SKETCH SHOWING MAXIMUM STIRRUP SPACING

ALL STIRRUPS TO BE IN PAIRS AS SHOWN ABOVE.

THE LOCATION OF STIRRUPS SHALL BE SUBMITTED FOR APPROVAL ON THE SHOP DRAWINGS.

THE OVERALL LENGTH OF GIRDERS "L" IS 91'-0".

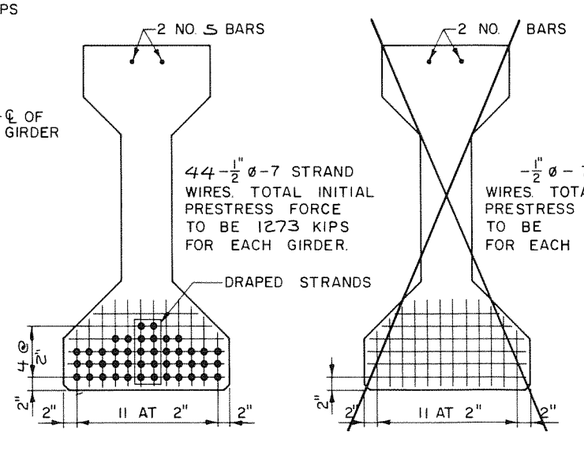

SECTION THRU GIRDER TAKEN AT ℄ OF SPAN

(STRESS RELIEVED STRAND PATTERN)

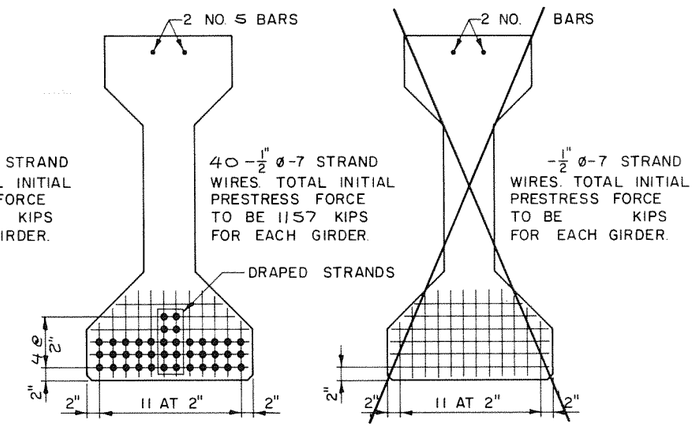

SECTION THRU GIRDER TAKEN AT ℄ OF SPAN

(LOW RELAXATION STRAND PATTERN)

◨-DENOTES STRESS RELIEVED GIRDER

△-DENOTES LOW RELAXATION GIRDER

No.	Date	Revision	By

PLANS PREPARED BY
OWEN AYRES & ASSOCIATES
ARCHITECTS / ENGINEERS
EAU CLAIRE, WISCONSIN

STATE OF WISCONSIN
DEPARTMENT OF TRANSPORTATION
DIVISION OF HIGHWAYS

STRUCTURE B-44-102

Const. Spec. 1981 | Drawn By G.L.D. | Plans Checked KBH

54" PRESTRESSED GIRDER DETAILS

SHEET 4 OF 6

X68931

STATE PROJECT NUMBER	SHEET NO.
6004-1-71	8.9

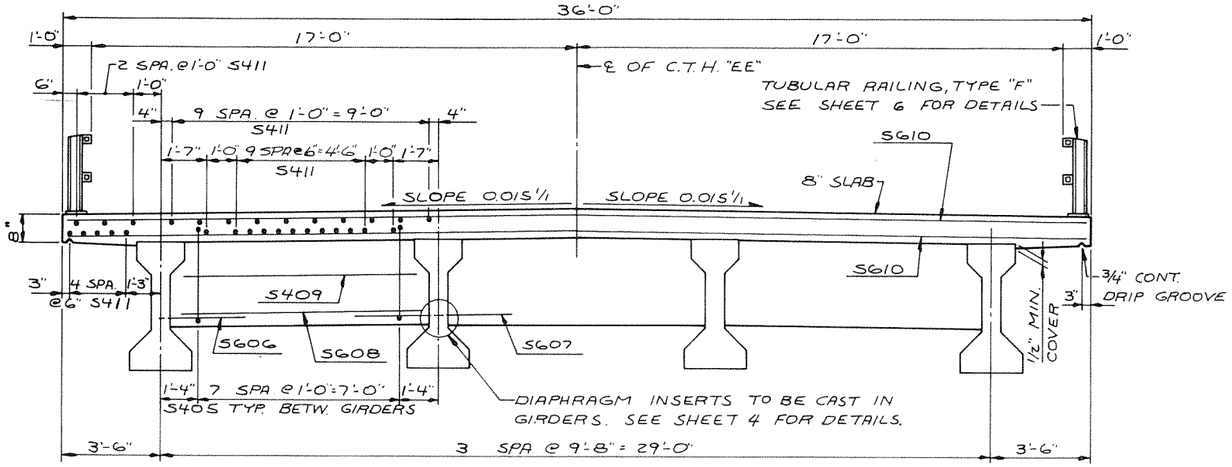

CROSS SECTION THRU ROADWAY

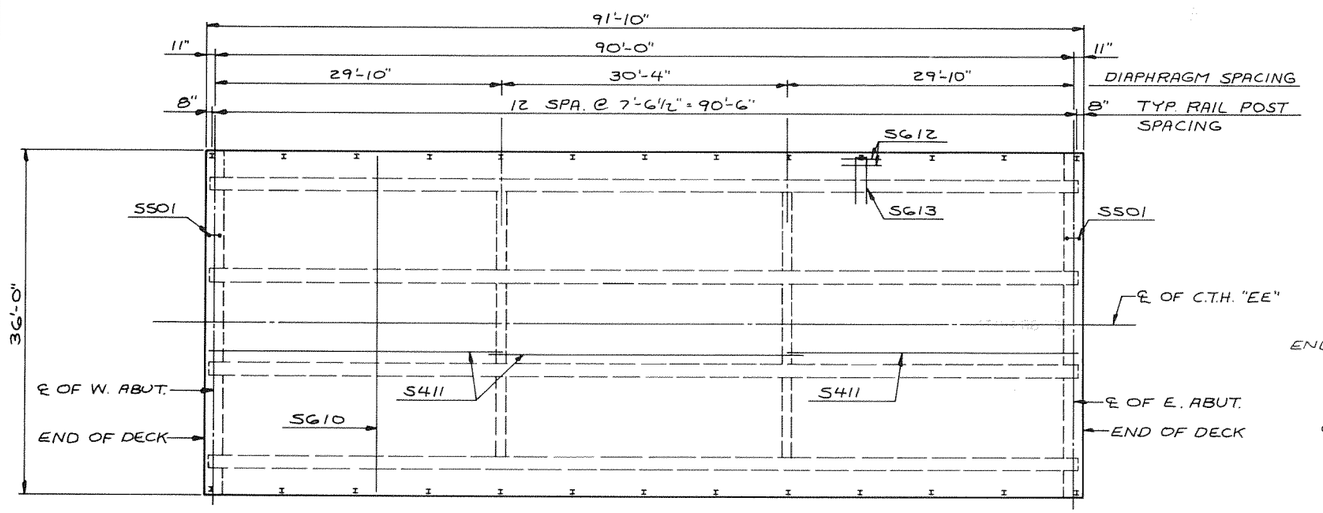

PLAN

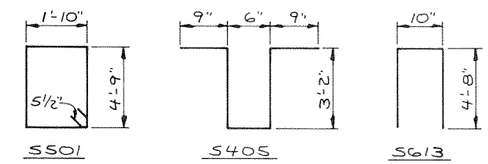

BILL OF BARS

BAR NO.	NO REQ'D	LENGTH	BENT	CUT DIAG.	22,160# LOCATION
S501	60	13-10	X		DIAPH. @ ABUT. STIR.
S402	10	35-8			" " " HORIZ.
S403	12	2-2			" " " "
S404	18	7-2			" " " "
S405	48	8-0	X		" IN SPAN VERT.
* S606	8	3-3			" " " HORIZ.
S607	8	6-2			" " " "
S608	12	8-6			" " " "
S409	12	8-8			" " " "
S610	270	35-8			SLAB TRANS. TOP & BOT.
S411	246	31-7			" LONG. " " "
S612	52	4-0			" @ RAIL POSTS
S613	26	10-0	X		" " " "

* PLAIN BAR THREAD ONE END 3".
BENDING DIMENSIONS ARE OUT TO OUT OF BARS.

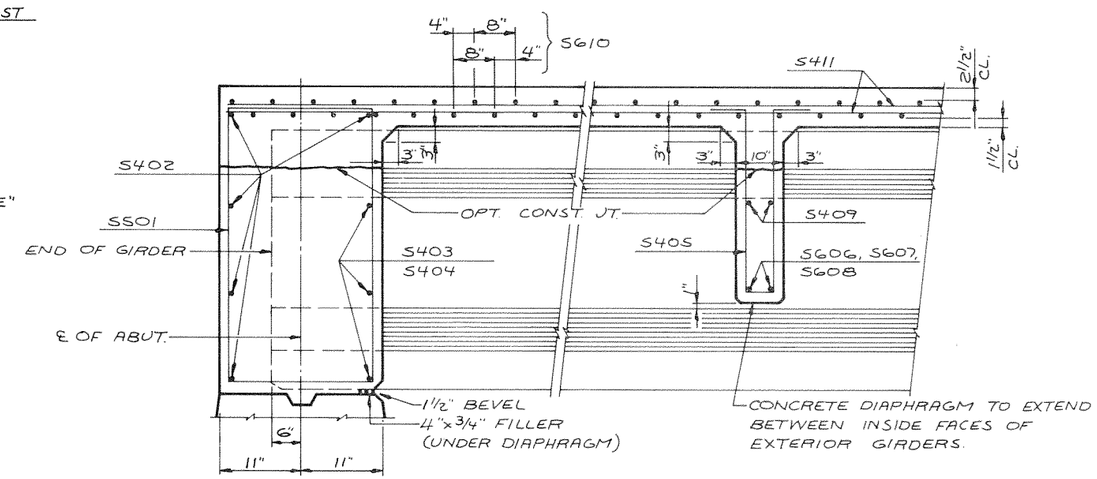

PART LONGITUDINAL SECTION

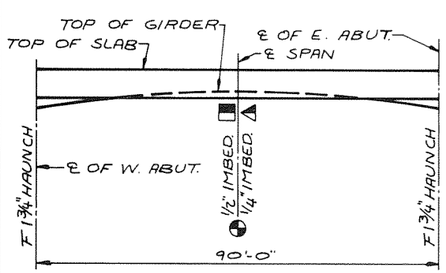

◐ TO COMPENSATE FOR VARIATIONS IN PRESTRESS CAMBER AND OTHER MINOR CONSTRUCTION DISCREPANCIES THE EMBEDMENT OF THE GIRDER INTO SLAB MAY BE VARIED WITH A MAXIMUM OF 1 1/2" ALLOWABLE EMBEDMENT AND THE SLAB HELD TO PLAN THICKNESS.

F IF VARIATIONS IN PRESTRESS CAMBER AND OTHER CONSTRUCTION DISCREPANCIES ARE OF SUCH A MAGNITUDE THAT THE MAXIMUM ALLOWABLE EMBEDMENT AS NOTED ABOVE WILL BE EXCEEDED THESE DIMENSIONS SHALL BE REVISED. THE 1 1/2" EMBEDMENT AND THE PLAN SLAB THICKNESS SHALL BE HELD WHILE THE GRADE LINE WILL BE REVISED.

▮ DENOTES STRESS RELIEVED GIRDER.
◭ DENOTES LOW RELAXATION GIRDER.

SLAB FORMING DIAGRAM

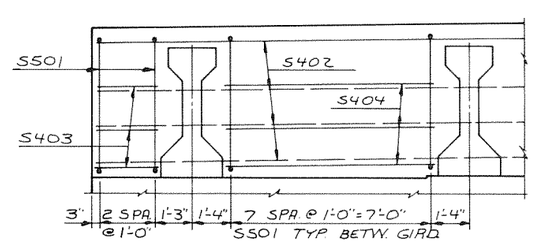

SECTION AT ABUTMENT

FOR BEARING PLAN SEE SHEET 6.

No.	Date	Revision	By

PLANS PREPARED BY
OWEN AYRES & ASSOCIATES
CONSULTING ENGINEERS
EAU CLAIRE, WISCONSIN

STATE OF WISCONSIN
DEPARTMENT OF TRANSPORTATION

STRUCTURE B-44-102

Const. Spec 1981 | Drawn By G.L.D. | Plans Checked KBH

SUPERSTRUCTURE

SHEET 5 OF 6

X68932

TELEDYNE POST

STATE PROJECT NUMBER	SHEET NO.
6004-1-71	8.10

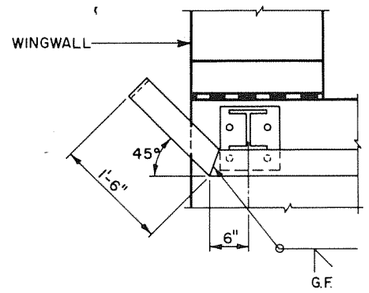

END DETAIL FOR WINGS

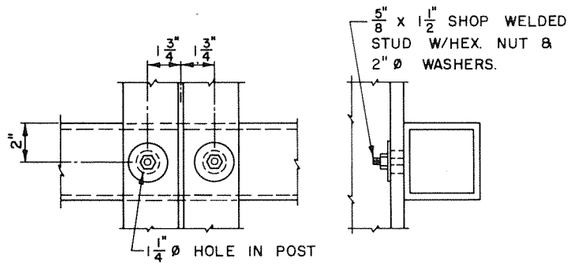

DETAIL A

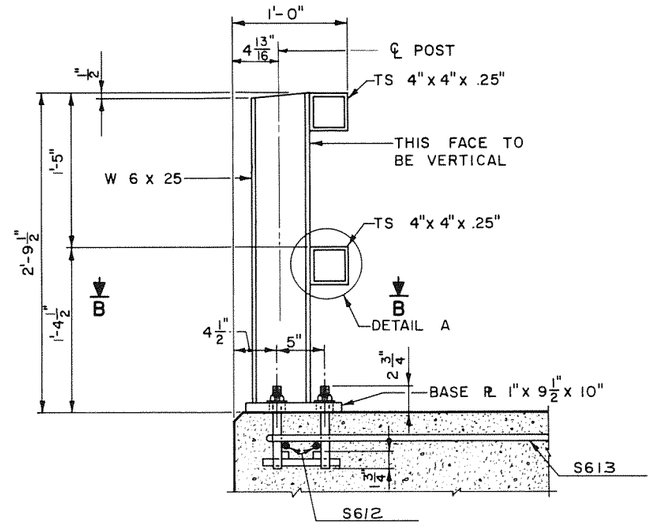

SECTION THRU RAILING

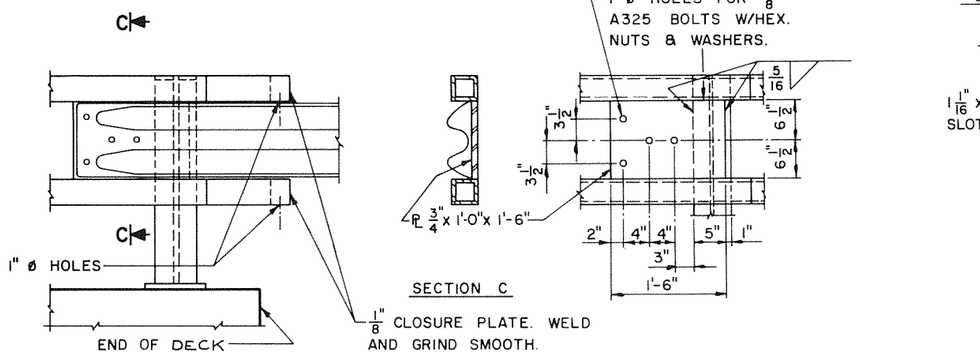

DETAIL AT END POST

(BEAM GUARD RAIL ATTACHMENT)

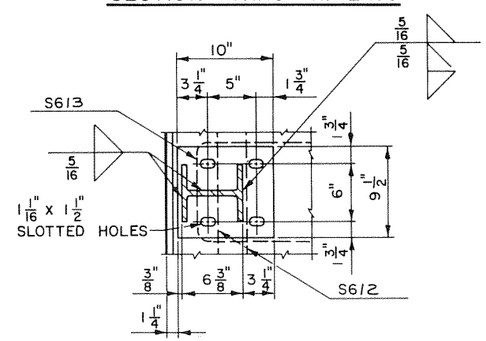

SECTION B

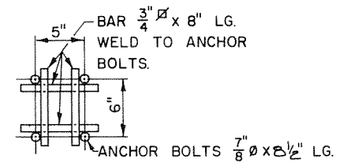

ANCHOR BOLT DETAIL

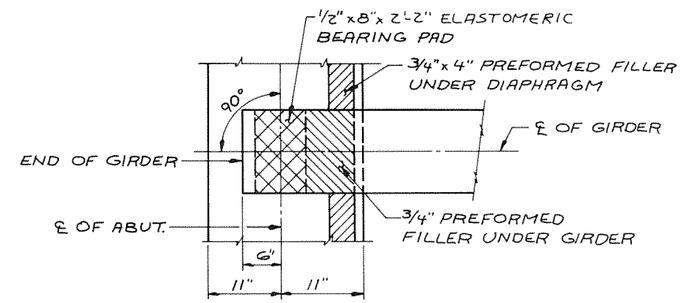

BEARING PLAN

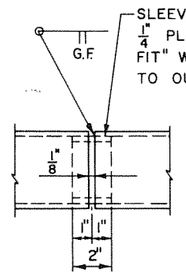

SHOP RAIL SPLICE DETAIL

(LOCATION MUST BE SHOWN ON THE SHOP DRAWINGS)

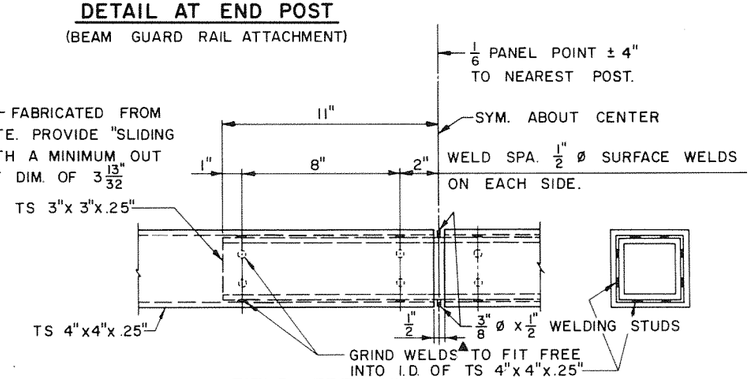

FIELD ERECTION JOINT DETAIL

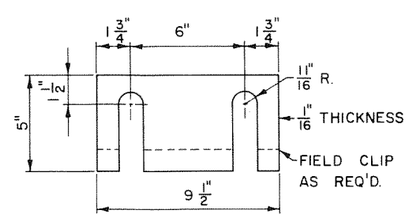

POST SHIM DETAIL

(4 PER POST)

GENERAL NOTES

1. BID ITEM SHALL BE "TUBULAR RAILING, TYPE F".
2. POST BASE PLATE SHALL BE FLAT WITH ALL SURFACES SMOOTH & FREE FROM WARP & ALL EDGES SMOOTH, STRAIGHT & VERTICAL. ALL PLATE CUTS SHALL BE MACHINE OR MACHINE FLAME CUTS.
3. RAILING SHALL BE 4" x 4" x .25" STRUCTURAL TUBING CONFORMING TO A.S.T.M. DESIGNATION A36.
4. ANCHOR BOLTS SHALL BE 7/8" Ø NOMINAL CONFORMING TO A.S.T.M. A449 WITH 3" THREAD AND HIGH STRENGTH NUTS AND WASHERS.
5. CAULK EXPOSED OPENINGS BETWEEN SHIMS.
6. POST, BASE PLATES & SHIMS SHALL BE MADE FROM MATERIAL CONFORMING TO A.S.T.M. DESIGNATION A36. CUT BOTTOM OF POST TO MATCH CROSS SLOPE OF ROADWAY. PLACE POST NORMAL TO GRADE LINE.
7. PLACE ANCHOR BOLTS NORMAL TO BASE PLATE.
8. ALL MEMBERS, INCLUDING UPPER 4" OF ANCHOR BOLTS, SHALL BE GALVANIZED AFTER FABRICATION.
9. BEAM GUARD ATTACHMENT MAY BE WELDED TO RAILS AND RAILS MAY BE WELDED TO POSTS.
10. FILL POST ANCHOR BOLT HOLES WITH NON-STAINING GRAY NON-BITUMINOUS JOINT SEALER.
11. STEEL SHIMS SHALL BE USED UNDER POSTS WHERE REQUIRED FOR ALIGNMENT.
12. RAILING SHALL BE FABRICATED IN 2 AND 3 PANEL LENGTHS.

▲ MINIMUM 5/8" FLAT SURFACE DIAMETER PUNCHINGS OR STUDS MAY BE USED AS AN ALTERNATE.

● OR MATERIAL OF EQUIVALENT YIELD STRENGTH AND ELONGATION.

No.	Date	Revision	By

PLANS PREPARED BY
OWEN AYRES & ASSOCIATES
ARCHITECTS / ENGINEERS
EAU CLAIRE, WISCONSIN

STATE OF WISCONSIN
DEPARTMENT OF TRANSPORTATION
DIVISION OF HIGHWAYS

STRUCTURE B-44-102

Const Spec 1981 | Drawn By G.L.D. | Plans Checked KBH

TUBULAR RAILING TYPE "F"

SHEET 6 OF 6

X68933