AS BUILT PLAN

STATE PROJECT	FEDERAL PROJECT	
	PROJECT	CONTRACT
6521-2-71	M 1201(14)	1

STATE OF WISCONSIN
DEPARTMENT OF TRANSPORTATION

PLAN OF PROPOSED IMPROVEMENT

LYNNDALE DR. & CAPITOL DR. INTERSECTION

(TOWN OF GRAND CHUTE)

C.T.H. "A"

OUTAGAMIE COUNTY

CONSTRUCTION STARTED : 4-6-92
CONSTRUCTION COMPLETED : 6-25-92

PRIME CONTRACTOR: SOMMERS CONSTRUCTION CO.

SUBS: MURPHY CONSTRUCTION CO.
ELMSTAR ELECTRIC CORP.
HIGHWAY SAFETY
TIMME, INC.
TRAFFIC SIGNING & MARKING, INC.

STATE PROJECT NUMBER
6521-2-71

AS BUILT PLAN
NO.
SUPERVISOR Agris Rozite
RESIDENT Arnie Haevers
CONTRACTOR Sommers Const. Co.
COMPLETED 6-25-92

A-12

OUTAGAMIE

Index of Sheets

Sheet No	1	Title
Sheet No	2-2.8	Typical Sections and Details
Sheet No.	3-3.2	Estimate of Quantities
Sheet No.	3A&3B	Miscellaneous Quantities
Sheet No	4	Right of Way Plat
Sheet No	5-5.4	Plan and Profile
Sheet No	6-6.21	Standard Detail Drawings
Sheet No	———	Standard Sign Plates
Sheet No.	———	Structure Plans
Sheet No.	———	Computer Earthwork Data
Sheet No.	9-9.5	Cross Sections

TOTAL SHEETS - 49

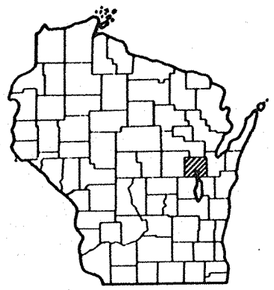

END PROJECT
STA. 17+00

BEGIN PROJECT
STA. 3+00
N- 171,300 (±200')
E-2,407,200 (±200')

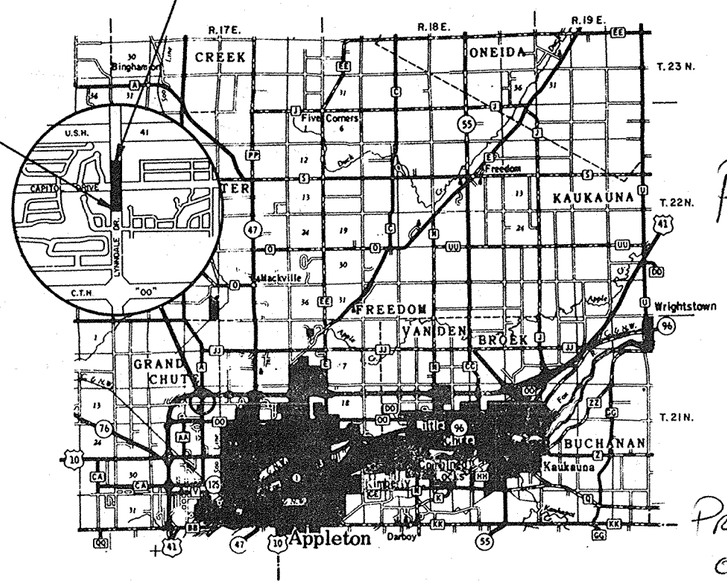

Design Designation

		C.T.H. "A"	CAPITOL DRIVE
A.D.T. (1987)	=	8,926	2,456
A.D.T. (2009)	=	14,988	10,308
D.H.V. (2009)	=	2,248	1,546
D.	=	50-50%	50-50%
T. % OF A.D.T.	=	8.5	6.8
V.	=	35 M.P.H.	25 M.P.H.
E.S.A.L.S.	=	2,555,730	

Conventional Signs

County Line
Township or Range Line
Section Line
Corporate or City Limits
Property line
Lot Line
Existing Right of Way Line
New Right of Way Line
Base or Survey Line
Slope Intercept
Existing Roadway or Private Entrance
Caution Symbol (Combustible fluids under pressure)
Railroads
Fence
Culverts in Place
Culverts Required
Power Pole
Telephone or Telegraph Pole
Right of Way Markers
Marsh
Wooded Area
Grade Elevation

Layout
Scale 0 1 2 MI.

Total Net Length of Centerline = 0.265 Mi. URBAN

PROJECT ENGINEER:
ARNIE HAEVERS
OMNNI ENGINEERS
303 S. BLUEMOUND DR.
APPLETON, WI
54914

PROJECT PERSONNEL LISTED ON PAGE 3 OF P.E. DIARY #1 6521-02-71

NOTE: ALL COORDINATES ON THIS PLAN ARE SCALED FROM U.S.G.S. TOPOGRAPHIC MAP, APPLETON, WISCONSIN, 7.5 MINUTE QUADRANGLE, CENTRAL ZONE, FOR IDENTIFICATION ONLY.

ELEVATIONS SHOWN ON THIS PLAN ARE REFERENCED TO U.S.G.S. DATUM.

APPROVED FOR OUTAGAMIE COUNTY
11/20/90 Date — Commissioner

ORIGINAL PLANS PREPARED BY
OMNNI ENGINEERS & SURVEYORS
APPLETON, WISCONSIN
WISCONSIN DENNIS M. NOODLOF E15817 APPLETON, WI PROFESSIONAL ENGINEER
11/15/90 Date — Signature

STATE OF WISCONSIN
DEPARTMENT OF TRANSPORTATION
Surveys: OMNNI ENGINEERS District Checker RGG
Designs: OMNNI ENGINEERS C.O. Checker ENB
District Supervisor J.C.L. C.O. Coordinator MTH
Approved
DATE: 8/29/91 — DISTRICT DIRECTOR
Approved
DATE: 10/7/91 — STATE TRAFFIC ENGINEER FOR HWYS.
Approved
DATE: 11/3/91 — REGIONAL CHIEF ROAD DESIGN ENGINEER

U.S. DEPARTMENT OF TRANSPORTATION
FEDERAL HIGHWAY ADMINISTRATION
REGION 5 WISCONSIN DIVISION
Approved
Date — Division Administrator

A-12

Cat No 2130 0110

E-650

STATE PROJECT NUMBER	SHEET NO.
6521-2-71	2.0

GENERAL NOTES, UTILITIES, STANDARD ABBRIEVIATIONS, AND STANDARD DETAIL DRAWINGS

GENERAL NOTES

THE LOCATIONS OF EXISTING AND PROPOSED UTILITY FACILITIES AS SHOWN ON THE PLANS ARE APPROXIMATE. THERE MAY BE OTHER UTILITY FACILITIES WITHIN THE PROJECT AREA THAT ARE NOT SHOWN.

NO TREES OR SHRUBS ARE TO BE REMOVED WITHOUT APPROVAL OF THE ENGINEER.

THE ALLOWANCE USED FOR EXPANDING THE FILLS TO COMPUTE THE VOLUME OF MATERIAL REQUIRED IS 30%.

WHEN THE QUANTITY OF ITEMS OF SUBBASE, BASE OR SURFACE COURSE IS MEASURED FOR PAYMENT BY THE TON, THE DEPTH OF THICKNESS OF THE COURSE SHOWN ON THE PLANS IS APPROXIMATE AND THE ACTUAL THICKNESS WILL DEPEND ON THE DISTRIBUTION OF MATERIAL AS DIRECTED BY THE ENGINEER.

THE COST OF CONNECTING EXISTING STORM SEWERS OR DRAINAGE STRUCTURES TO NEW STORM SEWER SHALL BE INCIDENTAL TO OTHER CONSTRUCTION ITEMS. STORM SEWER FITTINGS, SUCH AS TEES AND BENDS, WILL BE PAID FOR AT THE CONTRACT UNIT PRICE PER LINEAR FOOT FOR REINFORCED CONCRETE PIPE (CLASS III) STORM SEWER OF THE SAME DIAMETER.

INLET AND DISCHARGE ELEVATIONS FOR DRAINAGE STRUCTURES SHOWN ARE APPROXIMATE AND SHALL BE DETERMINED BY THE ENGINEER IN THE FIELD.

CURB HEIGHTS AT THE ENDS OF CURB AND GUTTER SHALL BE TAPERED FROM 6 TO 0 INCHES IN 3 FEET, WHERE APPLICABLE.

ALL DISTURBED AREAS ARE TO BE TOPSOILED, FERTILIZED, SEEDED AND MULCHED. SEED SHALL BE MIXTURE NO. 40. FERTILIZER SHALL BE TYPE "B".

IF EXCAVATION BELOW SUBGRADE IS REQUIRED, IT WILL BE MEASURED AND PAID FOR AS UNCLASSIFIED EXCAVATION. THE LIMITS OF E.B.S. WILL BE DETERMINED BY THE ENGINEER IN THE FIELD.

THE EXACT LOCATION AND LIMITS OF PRIVATE ENTRANCES, FIELD ENTRANCES AND COMMERCIAL ENTRANCES SHALL BE DETERMINED BY THE ENGINEER IN THE FIELD.

THE EXACT LOCATIONS OF ALL EROSION CONTROL ITEMS SHALL BE DETERMINED BY THE ENGINEER IN THE FIELD.

ALL SILT FENCE, DELIVERED, SHALL MEET THE REQUIREMENTS OF SILTY SOILS.

THE QUANTITY OF SALVAGED TOPSOIL WAS COMPUTED FROM MEASUREMENTS BETWEEN THE FINISHED SUBGRADE SHOULDER POINTS OR BACK OF CURB AND THE SLOPE INTERCEPTS AS SHOWN ON THE CROSS SECTIONS PLUS 5 FEET PER STATION FOR ROUNDING.

CURB RAMP OPENINGS AS SHOWN ON THE PLANS ARE APPROXIMATE. THE EXACT LOCATIONS SHALL BE GIVEN BY THE ENGINEER IN THE FIELD.

PROPERTY LINES AS SHOWN ARE APPROXIMATE.

WHERE SLOPE INTERCEPT LINES FALL OUTSIDE OF THE EXISTING RIGHT-OF-WAY, TEMPORARY LIMITED EASEMENTS TO ACCOMPLISH CONSTRUCTION WORK WITHIN THE SLOPE INTERCEPTS HAVE BEEN OBTAINED. THESE RIGHTS ARE EXTENDED TO THE CONTRACTOR.

LANDMARK REFERENCE MONUMENTS SHALL BE TYPE "D".

ALL SINGLE AGGREGATE ASPHALTIC PAVEMENT SHALL BE TYPE D1.

COUNTY SURVEYOR OR SURVEY CONTACT PERSON

MR. FRANK M. CHARLESWORTH
OUTAGAMIE COUNTY COURT HOUSE
410 S. WALNUT STREET
APPLETON, WISCONSIN 54911
TELEPHONE: (414) 832-5255

STANDARD ABBREVIATIONS

AH.	AHEAD
A.D.T.	AVERAGE DAILY TRAFFIC
ASPH.	ASPHALT
B.M.	BENCH MARK
BK.	BACK
℄	CENTERLINE
CL.	CLASS
CONC.	CONCRETE
C.P.C.P.	CORRUGATED PLASTIC CULVERT PIPE
C.S.C.P.	CORRUGATED STEEL CULVERT PIPE
C.T.H.	COUNTY TRUNK HIGHWAY
C.Y.	CUBIC YARD
CWT.	HUNDRED WEIGHT
D.H.V.	DESIGN HOUR VOLUME
D.	DIRECTIONAL SPLIT
DWY.	DRIVEWAY
E.	EAST
EA.	EACH
EL.	ELEVATION
EOP	EDGE OF PAVEMENT
F.L.	FLOWLINE
FLG.	FLANGE
'/', FT./FT.	FOOT PER FOOT
IN.	INCH
LB.	POUND
L.F.	LINEAR FOOT
L.S.	LUMP SUM
LT.	LEFT
M.H.	MANHOLE
MAX.	MAXIMUM
MI.	MILE
M.P.H.	MILE PER HOUR
MIN.	MINIMUM
N.	NORTH
NORM.	NORMAL
NO.	NUMBER
PAV'T.	PAVEMENT
P.E.	PRIVATE ENTRANCE
P.I.	POINT OF INTERSECTION
P.K.	PARKER-KALON FASTENER
P.L.	PROPERTY LINE
P.O.T.	POINT OF TANGENCY
R.	RADIUS
R.C.P.	REINFORCED CONCRETE PIPE
R.C.P.S.S.	REINFORCED CONCRETE PIPE STORM SEWER
RD.	ROAD
REQ'D.	REQUIRED
RT.	RIGHT
R/W	RIGHT-OF-WAY
SHLDR.	SHOULDER
S.	SOUTH
S.F.	SQUARE FEET
S.Y.	SQUARE YARD
℄	SURVEY LINE
S.T.H.	STATE TRUNK HIGHWAY
STA.	STATION
T.	PERCENT TRUCK TRAFFIC
TYP.	TYPICAL
UNCL.	UNCLASSIFIED
U.S.H.	UNITED STATES HIGHWAY
V.	DESIGN SPEED
V.C.	VERTICAL CURVE
VAR.	VARIABLE
W.	WEST

UTILITIES

ELECTRIC	WISCONSIN ELECTRIC POWER COMPANY P.O. BOX 1699 APPLETON, WISCONSIN 54913 ATT: BUDGET ENGINEERING SUPERVISOR TELEPHONE: (414) 735-8445
TELEPHONE	WISCONSIN BELL, INC. 221 W. WASHINGTON STREET FOURTH FLOOR, OSPE APPLETON, WISCONSIN 54911 ATT: MR. MICHAEL LOOMIS CABLE LOCATE: (800) 242-8511 (TOLL FREE)
GAS	WISCONSIN NATURAL GAS COMPANY 800 SOUTH LYNNDALE DRIVE APPLETON, WISCONSIN 54914 ATT: MR. J. G. HERB TELEPHONE: (414) 735-8357
CABLE TV	CABLEVISION OF THE FOX CITIES 1620 SOUTH LAWE STREET APPLETON, WISCONSIN 54915 ATT: MR. STEVE GUSTAVUS TELEPHONE: (414) 738-3160
SANITARY SEWERS & WATERMAINS	TOWN OF GRAND CHUTE SANITARY DISTRICTS NO. 1 AND NO. 2 P.O. BOX 1192 APPLETON, WISCONSIN 54912 ATT: MR. DOUG HUNTOON TELEPHONE: (414) 832-1581
DIGGERS HOTLINE	CABLE LOCATE TELEPHONE: (800) 242-8511 (TOLL FREE)

STANDARD DETAIL DRAWINGS

8A5-8a &b	INLET COVERS
8A5-8c	MANHOLE COVERS
8B6-3	MANHOLES, TYPE 1
8C1-4	INLETS, TYPES 1, 2, AND 3
8D1-11	CONCRETE CURB, CONCRETE CURB AND GUTTER AND PAVEMENT TIES
8D4-3	CONCRETE SURFACE DRAIN & ASPHALTIC FLUME
8D5-8	CURB RAMPS
8E9-3	SILT FENCE
8F1-10a	APRON ENDWALLS FOR CULVERT PIPE
9B2-4	CONDUIT
9B3-5	CONCRETE BASES
9B6-2	CAST BASES
9B9-2	CONCRETE CONTROL CABINET BASES
9B10-2	PULL BOX
9B11-1a	POLE MOUNTINGS FOR TRAFFIC SIGNALS, TYPE 2
9B11-1e	HARDWARE DETAILS FOR POLE MOUNTINGS
15C2-2	BARRICADES AND TRAFFIC CONTROL FOR ROAD CLOSURES
15C7-1	PAVEMENT MARKING SYMBOLS
15C8-3	PAVEMENT MARKING
16A1-4	LANDMARK REFERENCE MONUMENTS AND COVERS
8C5-1	INLETS, TYPE 8, 9, 10 & 11

A-18

STATE PROJECT NUMBER	SHEET NO.
6521-2-71	2.1

TYPICAL CROSS SECTIONS FOR

C.T.H. "A" OUTAGAMIE COUNTY

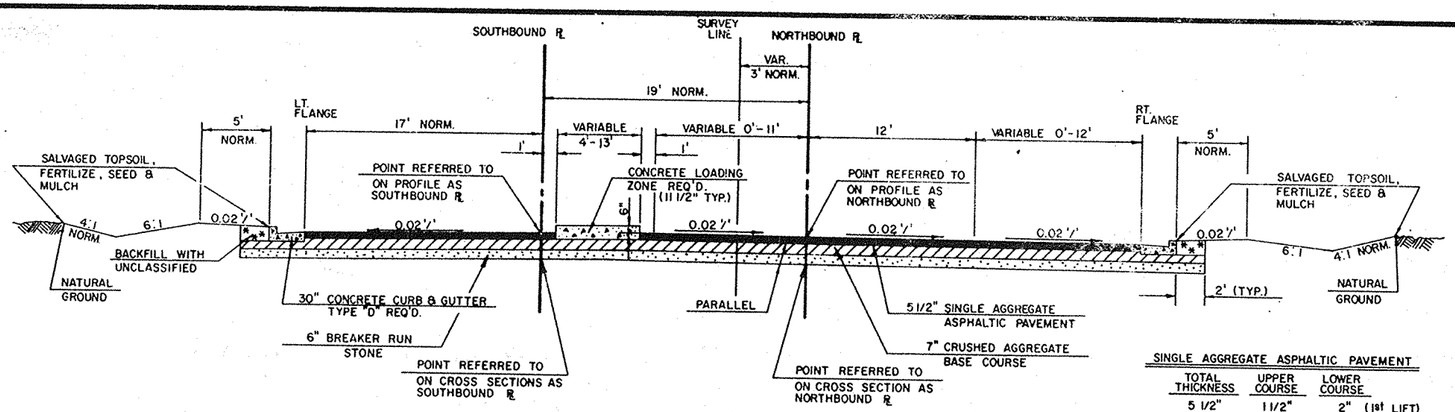

TYPICAL FINISHED CROSS SECTION FOR LYNNDALE DRIVE

STA. 4"SB"+00 TO STA. 9"SB"+19
STA. 7"NB"+50 TO STA. 9"NB"+22
STA. 10"SB"+78 TO STA. 12"SB"+00

SINGLE AGGREGATE ASPHALTIC PAVEMENT

TOTAL THICKNESS	UPPER COURSE	LOWER COURSE
5 1/2"	1 1/2"	2" (1st LIFT)
		2" (2nd LIFT)

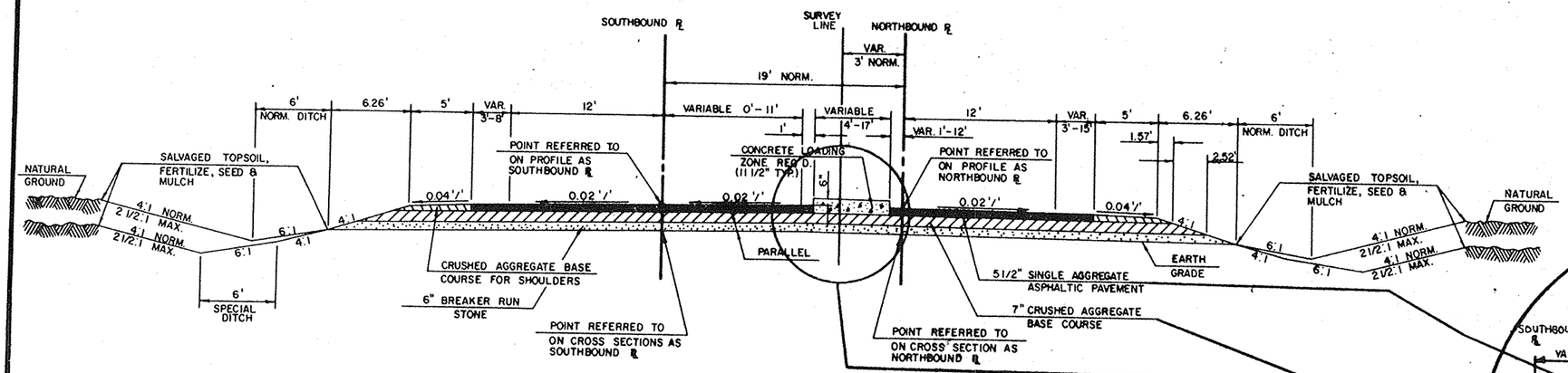

TYPICAL FINISHED CROSS SECTION FOR LYNNDALE DRIVE

STA. 3"SB"+00 TO STA. 4"SB"+00
STA. 3"NB"+00 TO STA. 7"NB"+50
STA. 12"SB"+00 TO STA. 17"SB"+00
STA. 10"NB"+81 TO STA. 17"NB"+00

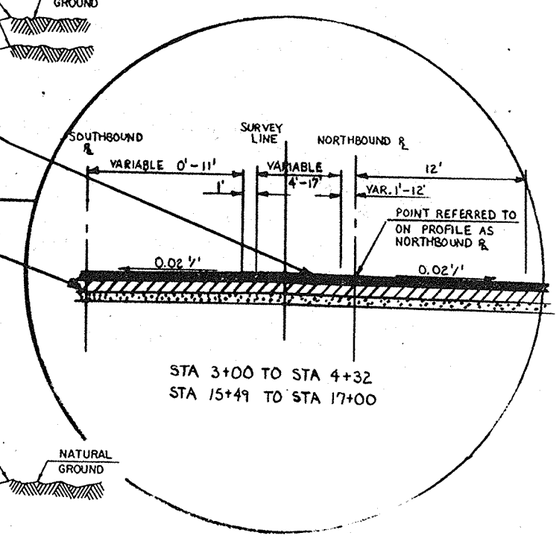

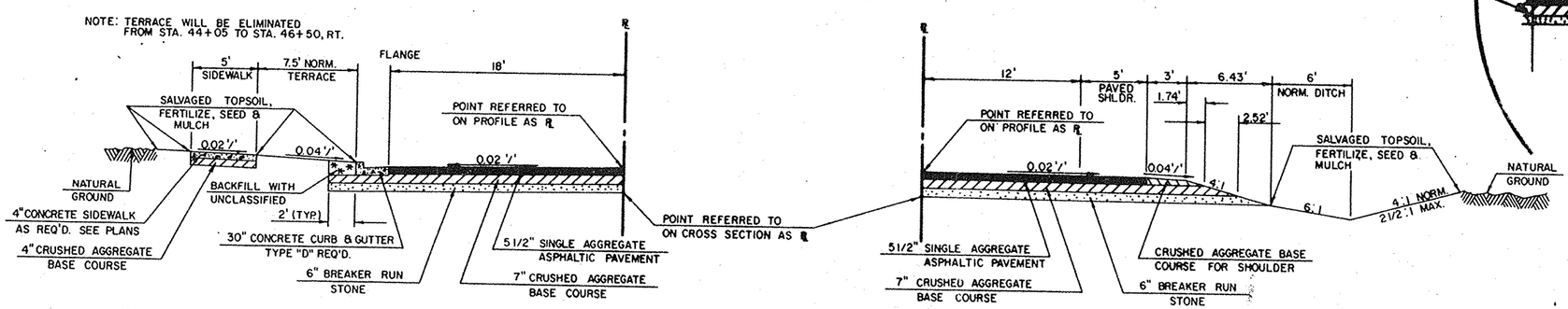

1/2 TYPICAL FINISHED CROSS SECTION FOR CAPITOL DRIVE

STA. 40+33 TO STA. 42+30, LT.
STA. 40+75 TO STA. 42+22, RT.
STA. 44+01 TO STA. 45+40, LT.
STA. 44+05 TO STA. 46+50, RT.

1/2 TYPICAL FINISHED CROSS SECTION FOR CAPITOL DRIVE

STA. 40+15 TO STA. 40+75, RT.
STA. 45+40 TO STA. 47+00, LT.

STATE PROJECT NUMBER	SHEET NO.
6521-2-71	2.2

CONSTRUCTION DETAILS
FOR
C.T.H. "A" OUTAGAMIE COUNTY

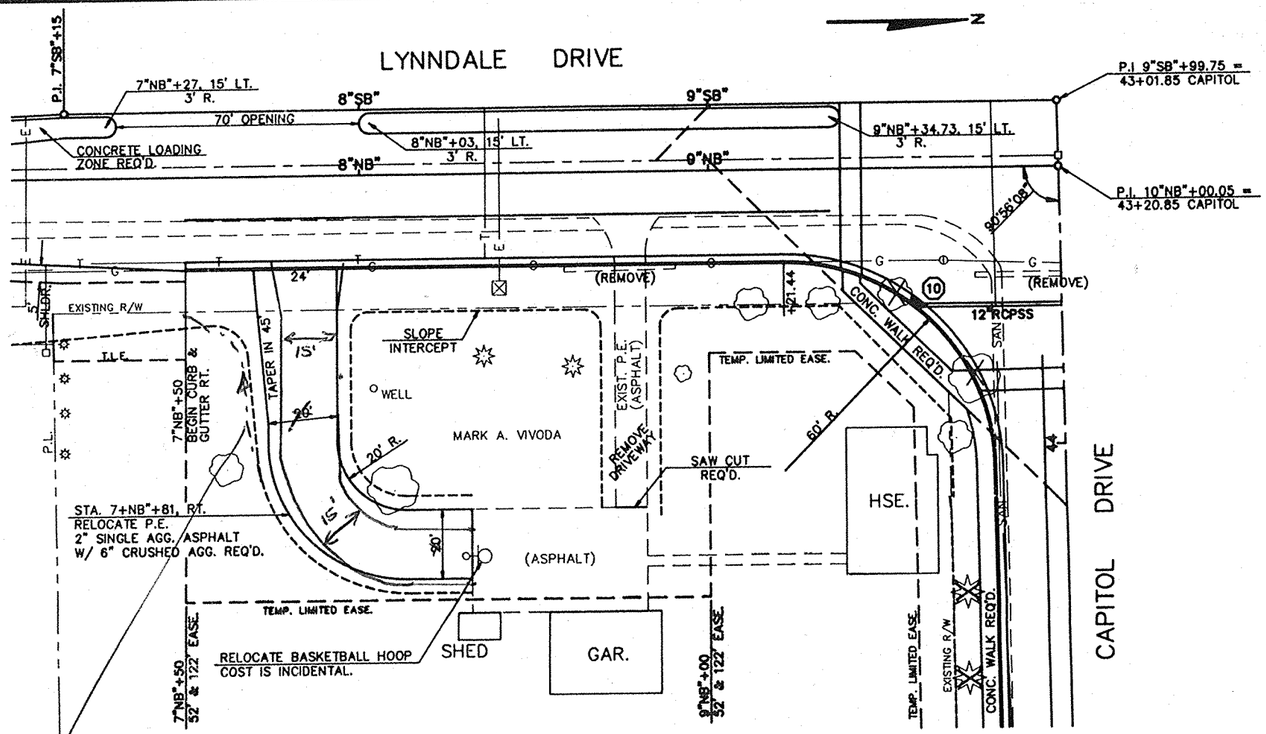

RELOCATION OF PRIVATE ENTRANCE

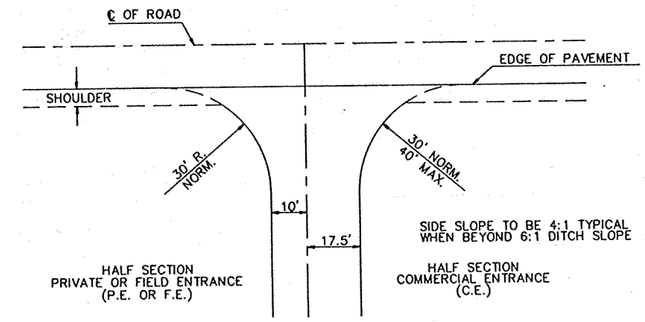

PLAN OF ENTRANCE

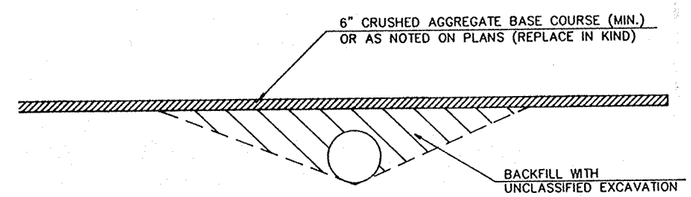

PROFILE OF ENTRANCE

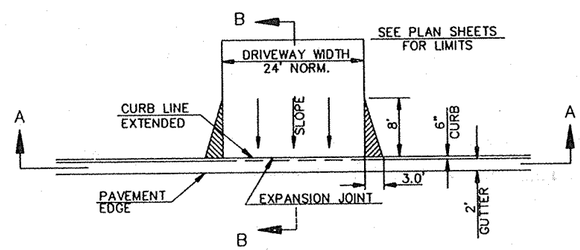

DRIVEWAY DETAIL

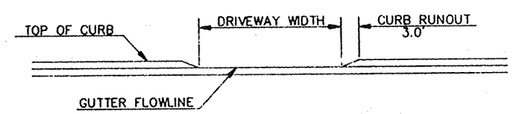

SECTION A-A

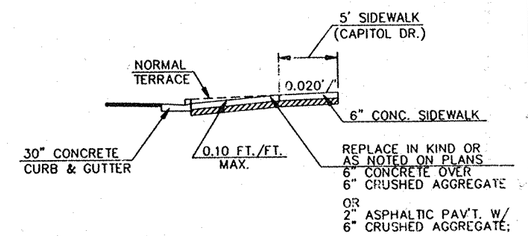

SECTION B-B

OMINI CAD FILE NO. E650\E6500T1

STATE PROJECT NUMBER	SHEET NO.
6521-2-71	2.3

CONSTRUCTION DETAILS FOR C.T.H. "A" OUTAGAMIE COUNTY

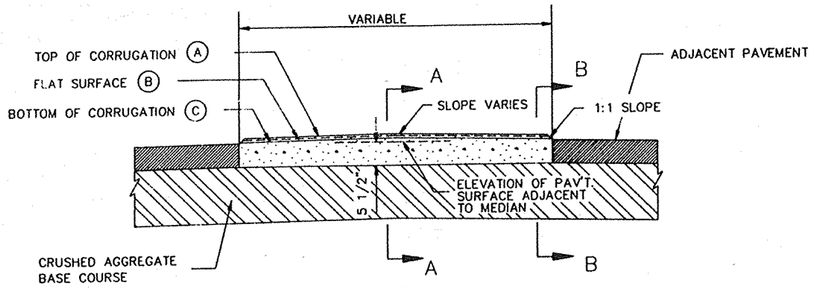

TRANSVERSE SECTION

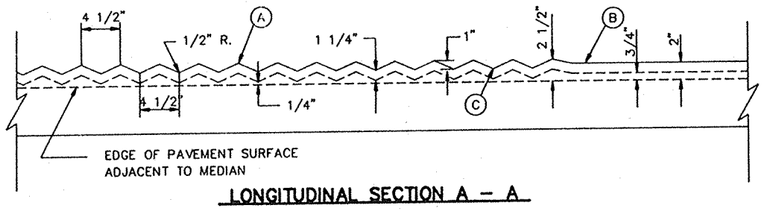

LONGITUDINAL SECTION A – A

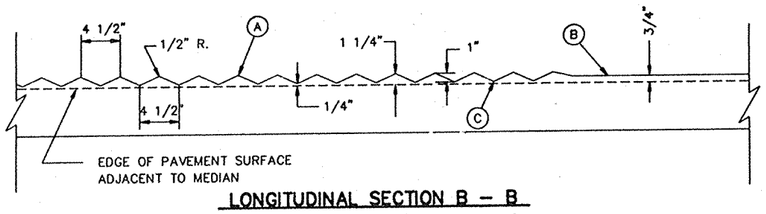

LONGITUDINAL SECTION B – B

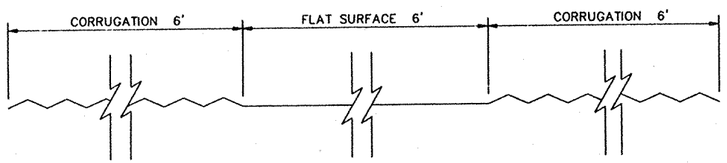

PROFILE ALONG TOP OF PROPOSED MEDIAN

CONCRETE CORRUGATED MEDIAN

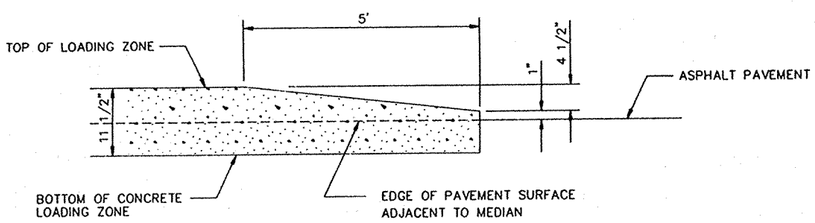

CONCRETE MEDIAN NOSE DETAIL

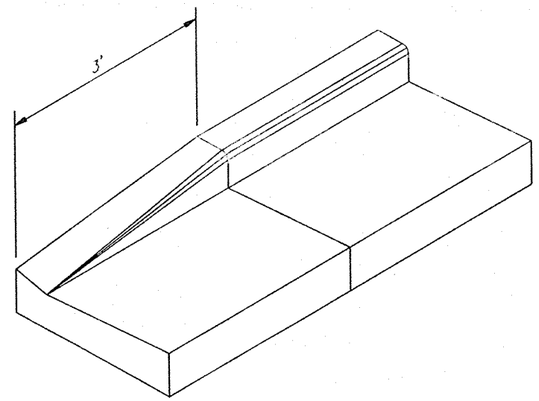

CURB & GUTTER TERMINI DETAIL

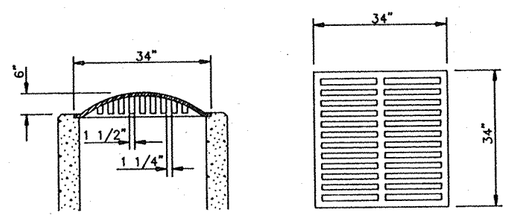

SPECIAL DITCH GRATE

34" X 34", APPROXIMATE WEIGHT 190 LBS.

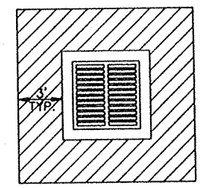

SOD AT INLET

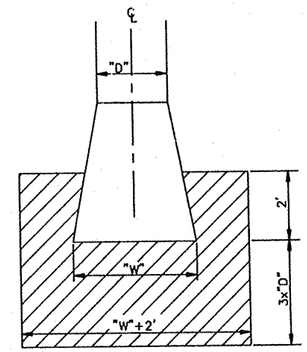

SOD AT PIPE END DETAIL

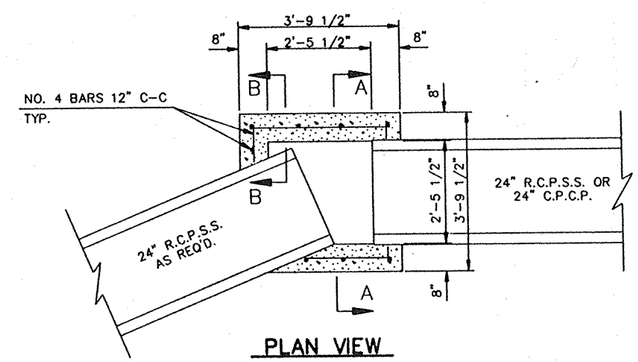

PLAN VIEW

SPECIAL INLET

STA. 47+12, CAPITOL DRIVE, LT.
STA. 47+85 CAPITOL DRIVE, RT.

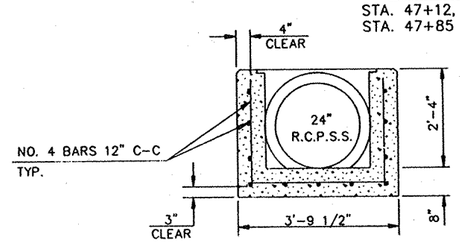

SECTION A-A

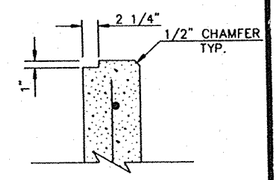

SECTION B-B

OMNNI CAD FILE NO. E650\E650DT2

STATE PROJECT NUMBER	SHEET NO.
6521-2-71	2.4

STORM SEWER DETAILS FOR C.T.H. "A" OUTAGAMIE COUNTY

STORM SEWER SCHEMATIC

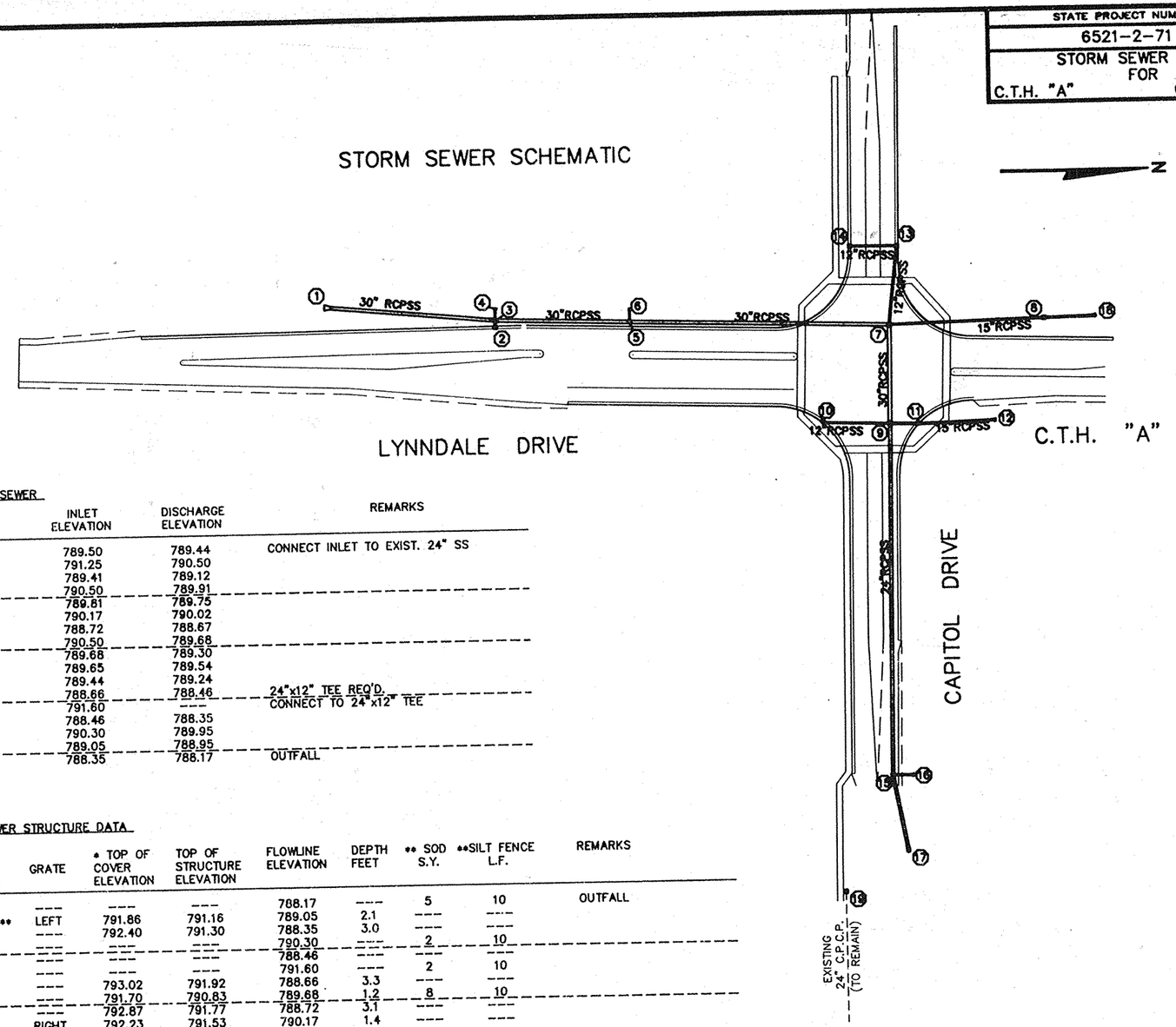

STORM SEWER

LOCATION FROM	LOCATION TO	DIAMETER INCHES	LENGTH LIN. FT.	TYPE	INLET ELEVATION	DISCHARGE ELEVATION	REMARKS
17	15	24	62	R.C.P. CL.IV S.S.	789.50	789.44	CONNECT INLET TO EXIST. 24" SS
16	15	15	13	R.C.P. CL.IV S.S.	791.25	790.50	
15	9	24	286	R.C.P. CL.IV S.S.	789.41	789.12	
12	11	15	63	R.C.P. CL.IV S.S.	790.50	789.91	
11	9	15	19	R.C.P. CL.IV S.S.	789.81	789.75	
10	9	12	50	R.C.P. CL.IV S.S.	790.17	790.02	
9	7	30	77	R.C.P. CL.IV S.S.	788.72	788.67	
18	8	15	39	R.C.P. CL.IV S.S.	790.50	789.68	
8	7	15	124	R.C.P. CL.IV S.S.	789.68	789.30	
14	13	12	36	R.C.P. CL.IV S.S.	789.65	789.54	
13	7	12	61	R.C.P. CL.IV S.S.	789.44	789.24	
7	5	30	214	R.C.P. CL.IV S.S.	788.66	788.46	24"x12" TEE REQ'D.
6	5	12	6	R.C.P. CL.IV S.S.	791.60	----	CONNECT TO 24"x12" TEE
5	3	30	110	R.C.P. CL.IV S.S.	788.46	788.35	
4	3	12	7	R.C.P. CL.IV S.S.	790.30	789.95	
2	3	12	3	R.C.P. CL.IV S.S.	789.05	788.95	
3	1	30	138	R.C.P. CL.IV S.S.	788.35	788.17	OUTFALL

STORM SEWER STRUCTURE DATA

STRUCTURE NO.	STATION	LOCATION	STRUCTURE	STRUCTURE TYPE	COVER	GRATE	* TOP OF COVER ELEVATION	TOP OF STRUCTURE ELEVATION	FLOWLINE ELEVATION	DEPTH FEET	** SOD S.Y.	**SILT FENCE L.F.	REMARKS
1	5+50 C.T.H. "A"	SURVEY TL 48' LT.	ENDWALL	30--INCH	---	---	---	---	788.17	---	5	10	OUTFALL
2	6+90 C.T.H. "A"	SURVEY TL 34' LT.	INLET	3	H ***	LEFT	791.86	791.16	789.05	2.1	---	---	
3	6+90 C.T.H. "A"	SURVEY TL 39' LT.	MANHOLE	1	J	---	792.40	791.30	788.35	3.0	---	---	
4	6+90 C.T.H. "A"	SURVEY TL 49' LT.	ENDWALL	12--INCH	---	---	---	---	790.30	---	2	10	
5	8+00 C.T.H. "A"	SURVEY TL 39' LT.	24"x12" TEE	---	---	---	---	---	788.46	---	---	---	
6	8+00 C.T.H. "A"	SURVEY TL 48' LT.	ENDWALL	12--INCH	---	---	---	---	791.60	---	2	10	
7	10+14 C.T.H. "A"	SURVEY TL 39' LT.	MANHOLE	~~1~~ 3	J	---	793.02	791.92	788.66	3.3	---	---	
8	11+40 C.T.H. "A"	SURVEY TL 42' LT.	INLET	8	MS	---	791.70	790.83	789.68	1.2	8	10	
9	10+14 C.T.H. "A"	SURVEY TL 42' RT.	MANHOLE	1	J	---	792.87	791.77	788.72	3.1	---	---	
10	9+61 C.T.H. "A"	SURVEY TL 43' RT.	INLET	3	H	RIGHT	792.23	791.53	790.17	1.4	---	---	
11	10+36 C.T.H. "A"	SURVEY TL 42' RT.	INLET	3	H	LEFT	792.40	791.70	789.81	1.9	---	---	
12	11+00 C.T.H. "A"	SURVEY TL 38' RT.	ENDWALL	15--INCH	---	---	---	---	790.50	---	2	10	
13	42+15 CAPITOL DR.	18' LT.	INLET	3	H ***	LEFT	792.16	791.46	789.44	2.0	---	---	
14	42+15 CAPITOL DR.	18' RT.	INLET	3	H	LEFT	792.16	791.46	789.65	1.8	---	---	
15	46+50 CAPITOL DR.	13' LT.	MANHOLE	1	J	---	794.03	792.93	789.41	3.5	---	---	
16	46+50 CAPITOL DR.	28' LT.	ENDWALL	15--INCH	---	---	---	---	791.25	---	2	10	
17	47+12 CAPITOL DR.	25' LT.	SPECIAL INLET	---	---	SPECIAL DITCH GRATE	791.64	791.64	789.50	2.1	8	10	
18	11+80 C.T.H. "A"	SURVEY TL 43' LT.	ENDWALL	15--INCH	---	---	---	---	790.50	---	2	10	
19	47+85 CAPITOL DR.	26' RT.	SPECIAL INLET	---	---	SPECIAL DITCH GRATE	794.00	794.00	791.33	2.6	4	10	CONNECT TO EXIST. 24" C.P.C.P.
									TOTALS		35	90	

* TOP OF COVER ELEVATION FOR INLET COVERS IS GUTTER FLOWLINE ELEVATION.
** QUANTITY INCLUDED ELSEWHERE.
*** SPECIAL GRATE NO. 1 REQ'D.

NOTE: STRUCTURE LOCATION REFERENCED TO SURVEY LINE.

OMNNI CADD FILE NO. E650\E650SS

20 COND BLACK TAPE

SB-1

A-3

NB-R - R

NB-Y - O

NB-G - G

DW ø8 - BLK

W ø8 - BLU

PB Com. - WH

PB ø8 - R/GRE

BLACK TAPE

SB-2

A-2

NB-R - R

NB-Y - O

NB-G - G

Y ← ø5 - OR/RED

G ← ø5 - BLU/RED

C-4 North

SB-R - R/BLK

SB-Y - O/BLK

SB-G - GR/BLK

Y ← ø1 - R/WH

G ← ø1 - GR/WH

BLACK TAPE

C-1 SB-3

SB-R - R/BLK

SB-Y - O/BLK

SB-G - G/BLK

DW-ø8 - BLK

W-ø8 - BLU

PB Com - WH

PB ø8 - R/GRE

RED TAPE

B-3 SB-4

WB-R - R/BLK

WB-Y - O/BLK

WB-G - G/BLK

← Y-ø3 - R/WH

← G-ø3 - GR/WH

DW ø6 - BLK

W ø6 - BLU.

PB Com - WH

PB ø6 - R/GRE

RED TAPE

B-2 SB-5

WB-R - R/BLK

W-Y - O/BLK

W-G G/BLK

← Y-ø3 R/WH

← G-ø3 GR/WH

DW ø6 - BLK

W ø6 - BLU

PB Com - WH

PB ø6 - R/GRE

D-1

EB-R - R

EB-Y - O

E-G - G

RED TAPE

SB-6

D-1

EB-R - R

EB-Y - O

EB-G - G

DW ϕ2 - BLK/WH

W ϕ2 - BLU/WH

PB-Com - WH

PB-ϕ2 - WH/RED

RED TAPE

SB-7

D-3

EB-R - R

EB-Y - O

EB-G - G

DW ϕ2 - BLK/WH

W ϕ2 - BLU/WH

PB-Com - WH

PB-ϕ2 - WH/RED

BLACK TAPE

SB-8

A-1

NB-R - R

NB-Y - O

NB-G - G

DW ϕ4 - BLK/WH

W ϕ4 - BLU/WH

PB Comm - WH

PB ϕ4 - W/RED

BLACK TAPE

A-4 SB-9

NB-R - R

NB-Y - O

NB-G - G

Y← ϕ5 - OR/RED

G← ϕ5 BLU/RED

C-2

SB-R - R/BLK

SB-Y - O/BLK

SB-G - G/BLK

Y← ϕ1 - R/WH

G← ϕ1 - GR/WH

BLACK TAPE

SB-10

C-3

SB-R - R/BLK

SB-Ø - O/BLK

SB-G - G/BLK

DW Ø4 - BLK/WH

W Ø4 - BLU/WH

PB-Com - WH

PB-Ø4 - W/RED

STATE PROJECT NUMBER	
6521-2-71	SHEET NO.

TRAFFIC SIGNAL DETAILS
FOR
C.T.H. "A" OUTAGAMIE COUNTY

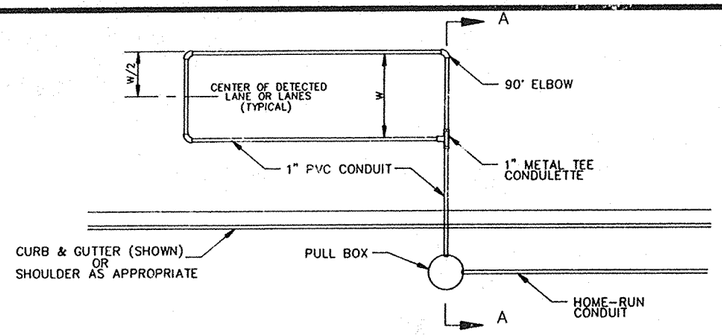

TYPICAL PLAN OF DETECTOR LOOP

SECTION A-A

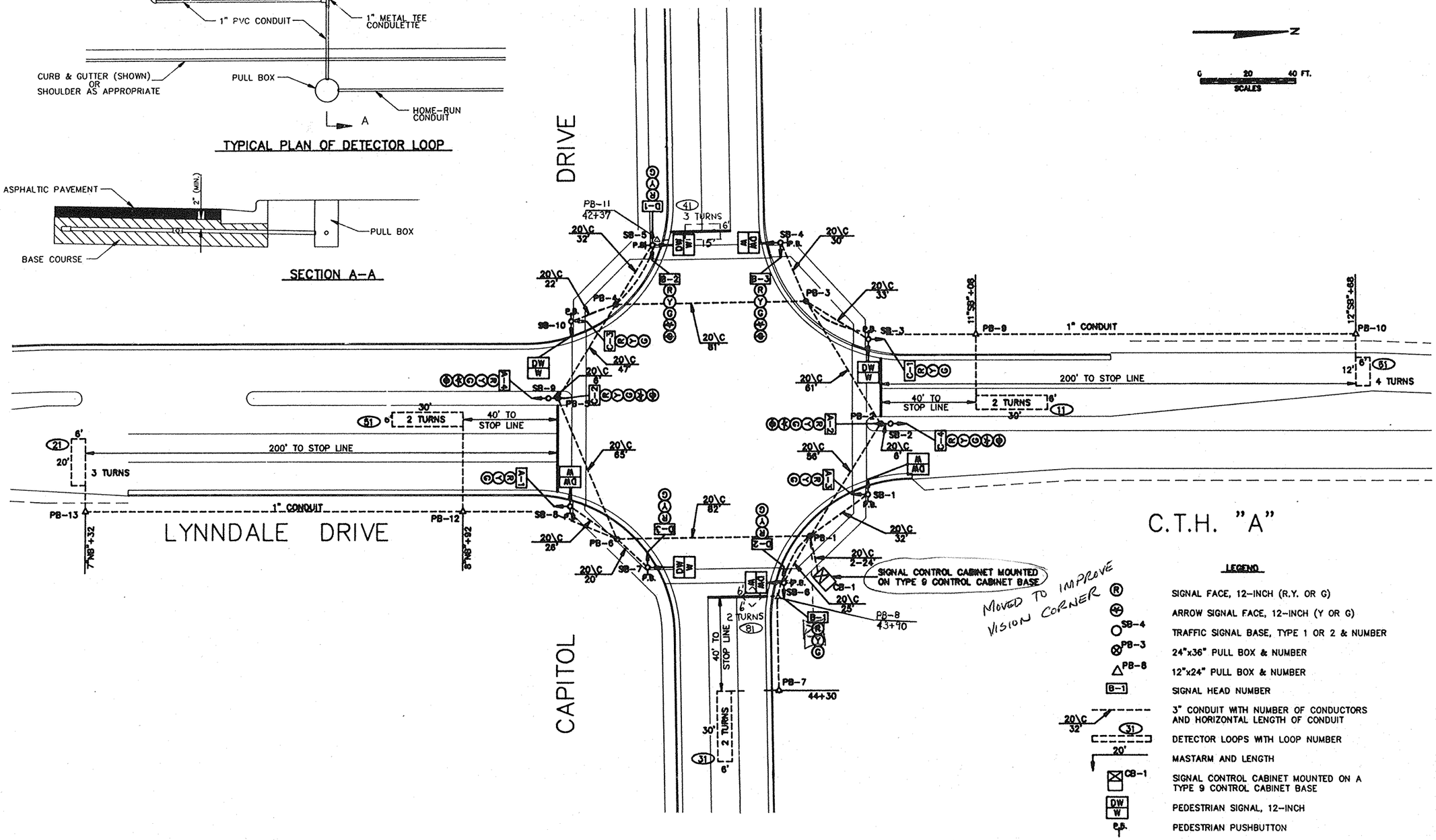

OMNNI CAD FILE NO. E650\E650SIGN

STATE PROJECT NUMBER	SHEET NO.
6521-2-71	2.6

TRAFFIC SIGNAL DETAILS
FOR
C.T.H. "A" OUTAGAMIE COUNTY

SIGNAL TIMING DIAGRAM

TIMING INTERVAL	TIMING FUNCTION							
	Ø1	Ø2	Ø3	Ø4	Ø5	Ø6	Ø7	Ø8
MINIMUM GREEN (INITIAL)	10	15	10	10	10	15	NOT USED	10
EXTENSION	0	4.0	0	3.5	0	4.0		3.5
MAXIMUM GREEN	10	25	10	19	10	25		19
YELLOW CHANGE	5	5	5	5	5	5		5
ALL-RED CLEARANCE	0	2	0	2	2	2		2
PED. WALK		7		7		7		7
PED. CLEARANCE *		10		12		10		12

* DOES NOT INCLUDE YELLOW CHANGE INTERVAL

DETECTOR LOGIC

DETECTOR NUMBER	AMPLIFIER CHANNEL NUMBER	DETECTOR OPERATION			PHASE CALLED	PHASE EXTENDED	DETECTOR DISCONNECT	CALLING DELAY	EXTENSION STRETCH	MOTORCYCLE SENSITIVITY	
		CALLS AND EXTENDS	CALLS ONLY	EXTENDS ONLY							
11	1		X		Ø1					YES	
21	2	X			Ø2	Ø2				YES	
31	3		X		Ø3					YES	
41	4	X			Ø4	Ø4		YES		YES	
51	5		X		Ø5					YES	
61	6	X			Ø6	Ø6				YES	
81	7	X			Ø8	Ø8		YES		YES	

CONTROLLER LOGIC

PHASE NUMBER	PHASE LOCKING	PHASE RECALL	PHASE TERMINATION	PHASE NON LOCKING
Ø1				
Ø2		X	*	
Ø3				
Ø4			*	*
Ø5				
Ø6		X	*	
Ø8			*	*

* WHEN Ø2 AND Ø6 OR Ø4 AND Ø8 ARE TIMING CONCURRENTLY, THEY SHALL TERMINATE TOGETHER.

CHART 1

PHASE ON	NON-CONFLICTING PHASE ALLOWED TO TIME CONCURRENTLY	PHASES IN CONFLICT WITH PHASE ON
Ø1	Ø5 OR Ø6	Ø2, Ø3, Ø4, Ø8
Ø2	Ø5 OR Ø6	Ø1, Ø3, Ø4, Ø8
Ø3	Ø8	Ø1, Ø2, Ø4, Ø5, Ø6
Ø4	Ø8	Ø1, Ø2, Ø3, Ø5, Ø6
Ø5	Ø1 OR Ø2	Ø3, Ø4, Ø6, Ø8
Ø6	Ø1 OR Ø2	Ø3, Ø4, Ø5, Ø8
Ø7	NOT USED	----
Ø8	Ø3 OR Ø4	Ø1, Ø2, Ø5, Ø6

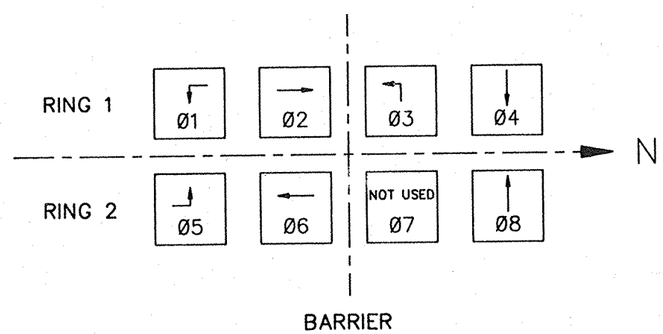

OVERLAPS

O.L. "A" =
O.L. "B" =
O.L. "C" =
O.L. "D" =

NOTES:

1. ANY ACTUATED PHASE FOR WHICH THERE IS NO CALL SHALL BE SKIPPED.
2. WHEN ONE PHASE IS ON ALONE, ANY NON-CONFLICTING PHASE MAY START TIMING CONCURRENTLY WITHOUT A CLEARANCE INTERVAL. (SEE CHART 1 AT LEFT.)
3. PROVIDE HAND CONTROL OPERATION.

STATE PROJECT NUMBER	SHEET NO.
6521-2-71	2.7

PAVEMENT MARKING PLAN
FOR
C.T.H. "A" OUTAGAMIE COUNTY

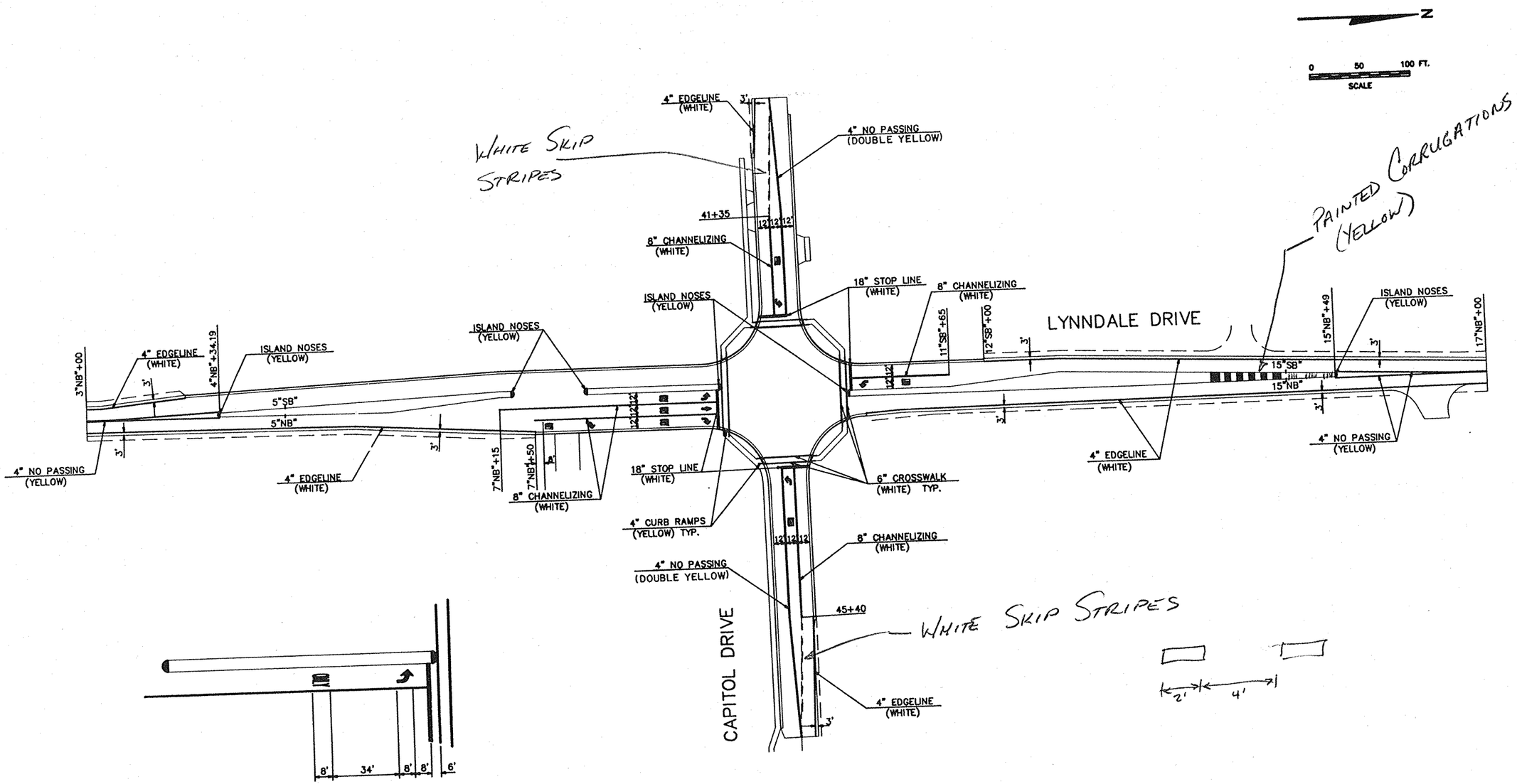

TYPICAL ARROW AND "ONLY" INSTALLATION

OMNNI CAD FILE NO. E650\E650PM

STATE PROJECT NUMBER	SHEET NO.
6521 - 2 - 71	2.8

CONSTRUCTION DETAILS
FOR
C.T.H. "A" OUTAGAMIE COUNTY

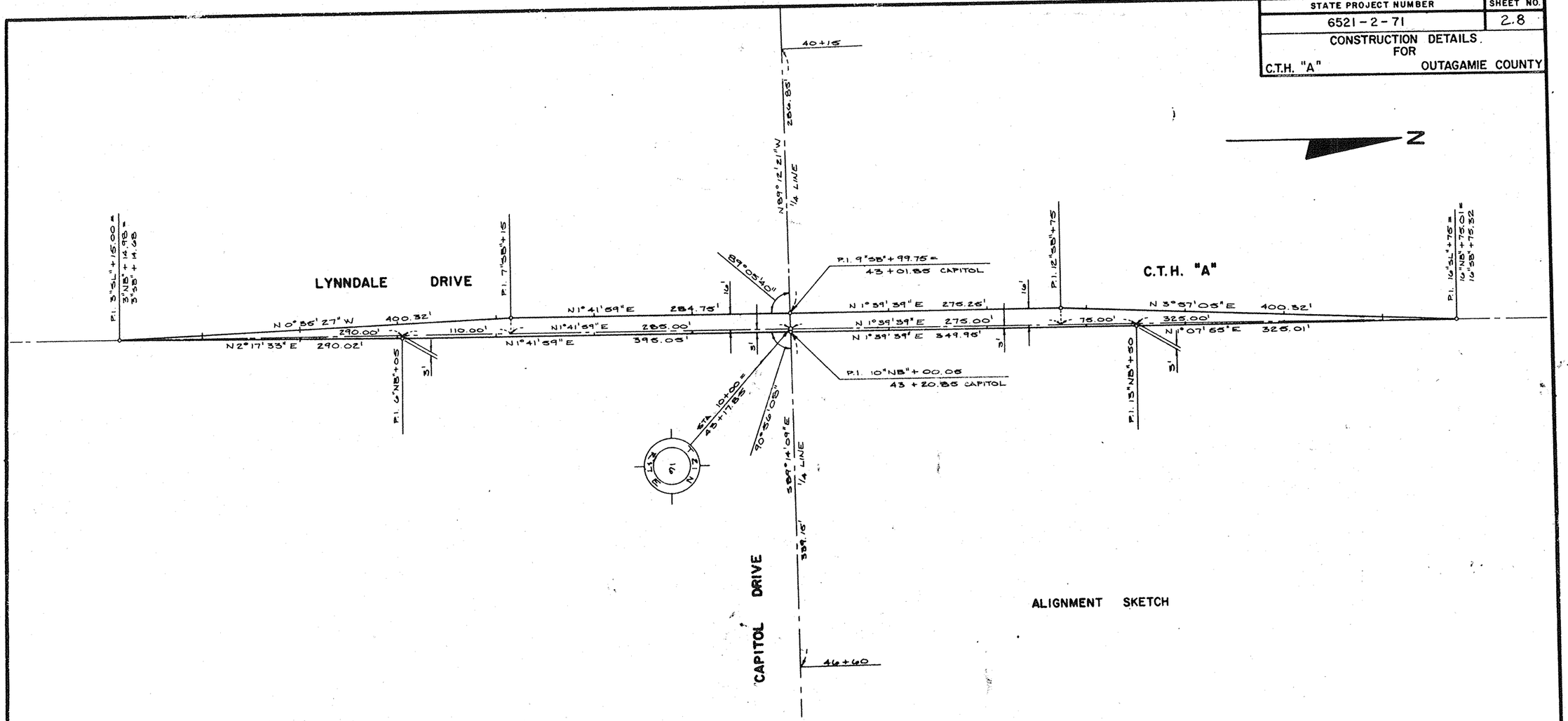

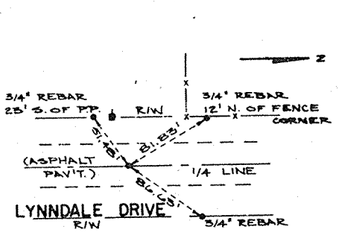

P.I. 3"℄"+15
(P.K. NAIL)

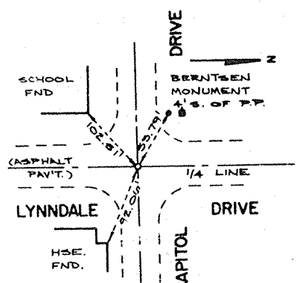

P.I. 10"℄"+00 =
43+17.85
(P.K. NAIL)

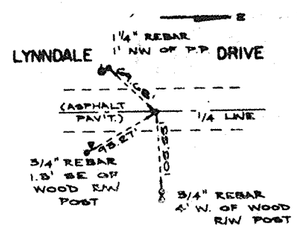

P.I. 16"℄"+75
(P.K. NAIL)

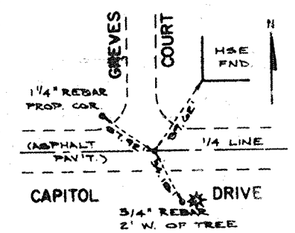

P.I. 40+15
(P.K. NAIL)

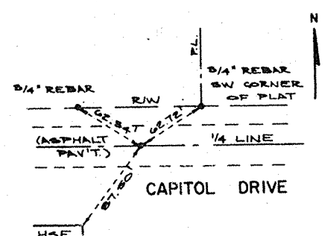

P.I. 46+60
(P.K. NAIL)

ALIGNMENT TIES

DATE 10/11/91

E S T I M A T E O F Q U A N T I T I E S

ITEM	ITEM DESCRIPTION	UNIT	TOTAL	6521-02-71 QUANTITY
20102	CLEARING	I.D.	114.00	114.00
20105	GRUBBING	I.D.	114.00	114.00
20402	REMOVING ASPHALTIC SURFACE	S.Y.	70.00	70.00
20412	REMOVING FENCE	L.F.	353.00	353.00
20503	UNCLASSIFIED EXCAVATION	C.Y.	6,446.00	6,446.00
21301	FINISHING ROADWAY	L.S.	1.00	1.00
30404	CRUSHED AGGREGATE BASE COURSE	TON	5,700.00	5,700.00
40204	ASPHALTIC MATERIAL FOR TACK COAT	GAL.	460.00	460.00
40501	ASPHALTIC MATERIAL FOR PLANT MIXES	TON	200.00	200.00
41531	CONCRETE DRIVEWAY	S.Y.	46.00	46.00
52003	CULVERT PIPE, CLASS III, 18-INCH	L.F.	52.00	52.00
52005	CULVERT PIPE, CLASS III, 24-INCH	L.F.	64.00	64.00
52007	CULVERT PIPE, CLASS III, 30-INCH	L.F.	70.00	70.00
52061	APRON ENDWALLS FOR CULVERT PIPE, 18-INCH	EACH	2.00	2.00
52063	APRON ENDWALLS FOR CULVERT PIPE, 24-INCH	EACH	2.00	2.00
52065	APRON ENDWALLS FOR CULVERT PIPE, 30-INCH	EACH	2.00	2.00
52260	REINFORCED CONCRETE APRON ENDWALLS FOR CULVERT PIPE, 12-INCH	EACH	2.00	2.00
52261	REINFORCED CONCRETE APRON ENDWALLS FOR CULVERT PIPE, 15-INCH	EACH	3.00	3.00
52266	REINFORCED CONCRETE APRON ENDWALLS FOR CULVERT PIPE, 30-INCH	EACH	1.00	1.00
60133	CONCRETE CURB AND GUTTER, 30-INCH, TYPE D	L.F.	1,917.00	1,917.00
60204	CONCRETE SIDEWALK, 4-INCH	S.F.	3,630.00	3,630.00
60206	CONCRETE SIDEWALK, 6-INCH	S.F.	460.00	460.00
60210	CONCRETE LOADING ZONE	S.F.	7,550.00	7,550.00
60850	REINFORCED CONCRETE PIPE, CLASS IV, STORM SEWER, 12-INCH	L.F.	163.00	163.00

Sheet 3

ITEM	ITEM DESCRIPTION	UNIT	TOTAL	6521-02-71 QUANTITY
60851	REINFORCED CONCRETE PIPE, CLASS IV, STORM SEWER, 15-INCH	L.F.	258.00	258.00
60854	REINFORCED CONCRETE PIPE, CLASS IV, STORM SEWER, 24-INCH	L.F.	348.00	348.00
60856	REINFORCED CONCRETE PIPE, CLASS IV, STORM SEWER, 30-INCH	L.F.	539.00	539.00
61110	MANHOLES, TYPE 1	EACH	4.00	4.00
61122	INLETS, TYPE 3	EACH	5.00	5.00
61123	INLETS, TYPE 8	EACH	1.00	1.00
61151	MANHOLE COVERS, TYPE J	EACH	4.00	4.00
61167	INLET COVERS, TYPE H	EACH	5.00	5.00
61170	INLET COVERS, TYPE MS	EACH	1.00	1.00
61331	NONMETALLIC CONDUIT, 1-INCH	L.F.	569.00	569.00
61336	NONMETALLIC CONDUIT, 3-INCH	L.F.	672.00	672.00
61801	MAINTENANCE AND REPAIR OF HAUL ROADS	L.S.	1.00	1.00
61910	MOBILIZATION	L.S.	1.00	1.00
62001	CONCRETE CORRUGATED MEDIAN	S.F.	590.00	590.00
62101	LANDMARK REFERENCE MONUMENTS	EACH	4.00	4.00
62203	ASPHALTIC FLUMES	S.Y.	7.00	7.00
62301	CALCIUM CHLORIDE SURFACE TREATMENT	TON	6.00	6.00
62401	WATER	MGAL	86.00	86.00
62505	SALVAGED TOPSOIL	S.Y.	9,700.00	9,700.00
62702	MULCHING	S.Y.	9,700.00	9,700.00
62815	SILT FENCE, DELIVERED	L.F.	130.00	130.00
62816	SILT FENCE, INSTALLED	L.F.	130.00	130.00
62817	SILT FENCE MAINTENANCE	L.F.	260.00	260.00
62905	FERTILIZER, TYPE B	CWT.	7.00	7.00
63002	SEEDING	LB.	180.00	180.00
63101	SODDING	S.Y.	77.00	77.00
64012	CONCRETE BASES, TYPE 1	EACH	10.00	10.00
64210	FIELD LABORATORY	L.S.	1.00	1.00

Sheet 3.1

ITEM	ITEM DESCRIPTION	UNIT	TOTAL	6521-02-71 QUANTITY
64220	FIELD OFFICE, TYPE C	L.S.	1.00	1.00
64301	TRAFFIC CONTROL	L.S.	1.00	1.00
64313	TRAFFIC CONTROL, DRUMS	DAYS	2,490.00	2,490.00
64321	TRAFFIC CONTROL, WARNING LIGHTS, TYPE A	DAYS	2,490.00	2,490.00
64405	PAVEMENT MARKING, PREFORMED PLASTIC	L.F.	3,545.00	3,545.00
64412	PAVEMENT MARKING, CHANNELIZING, PREFORMED PLASTIC	L.F.	745.00	745.00
64434	PAVEMENT MARKING, STOP LINE, PREFORMED PLASTIC, 18-INCH	L.F.	112.00	112.00
64454	PAVEMENT MARKING, CROSSWALK, PREFORMED PLASTIC, 6-INCH	L.F.	422.00	422.00
64469	PAVEMENT MARKING, ARROWS, PREFORMED PLASTIC, SINGLE	EACH	7.00	7.00
64478	PAVEMENT MARKING, WORDS, PREFORMED PLASTIC	EACH	7.00	7.00
64484	TEMPORARY PAVEMENT MARKING	L.F.	2,120.00	2,120.00
64493	PAVEMENT MARKING, CURB RAMP, EPOXY	L.F.	192.00	192.00
64496	PAVEMENT MARKING, ISLAND NOSE, EPOXY	S.F.	70.00	70.00
64601	SAWING EXISTING PAVEMENT	L.F.	450.00	450.00
90001	REMOVING EXISTING SIGNAL EQUIPMENT	L.S.	1.00	1.00
90003	TRAFFIC SIGNAL CABLE 20 CONDUCTOR, NO. 12	L.F.	930.00	930.00
90004	SPECIAL INLET	EACH	2.00	2.00
90005	SPECIAL DITCH GRATE	EACH	2.00	2.00
90359	BREAKER RUN STONE	TON	4,400.00	4,400.00
90384	SINGLE AGGREGATE ASPHALTIC PAVEMENT, TYPE D1	TON	3,140.00	3,140.00
90785	CONCRETE CONTROL CABINET BASES, TYPE 9	EACH	1.00	1.00
90792	PULL BOXES, 12X24-INCH	EACH	7.00	7.00
90797	PULL BOXES, 24X36-INCH	EACH	6.00	6.00
90800	PEDESTAL BASES	EACH	10.00	10.00
90811	TRAFFIC SIGNAL STANDARDS, 15-FT.	EACH	10.00	10.00

ITEM	ITEM DESCRIPTION	UNIT	TOTAL	6521-02-71 QUANTITY
90817	TRAFFIC SIGNAL FACES, 3-12 VERTICAL	EACH	8.00	8.00
90819	TRAFFIC SIGNAL FACES, 5-12 VERTICAL	EACH	6.00	6.00
90830	PEDESTRIAN SIGNAL FACES, 12-INCH	EACH	8.00	8.00
90833	PEDESTRIAN PUSH BUTTONS	EACH	8.00	8.00
90834	TRAFFIC SIGNAL MOUNTING HARDWARE, CTH "A"	L.S.	1.00	1.00
90838	BACKPLATES	EACH	14.00	14.00
90859	TRAFFIC SIGNAL CONTROLLER, FULLY ACTUATED, 8 PHASE	EACH	1.00	1.00
90865	ELECTRICAL SERVICE, TRAFFIC SIGNALS, CTH "A"	L.S.	1.00	1.00
90870	LOOP DETECTOR AMPLIFIER, CTH "A"	L.S.	1.00	1.00
90871	LOOP DETECTOR CONDUIT, 1-INCH	L.F.	491.00	491.00
90872	LOOP DETECTOR WIRE	L.F.	1,148.00	1,148.00
90873	LOOP DETECTOR LEAD IN CABLE	L.F.	1,520.00	1,520.00

Sheet 3.2

STATE PROJECT NUMBER	SHEET NO.
6521-2-71	3A

DETAIL SUMMARY OF MISCELLANEOUS QUANTITIES

CLEARING AND GRUBBING

STATION	LOCATION	CLEARING I.D.	GRUBBING I.D.
9"NB"+54	LYNNDALE DR., 36' RT.	24	24
40+22	CAPITOL DR., 30' RT.	8	8
40+35	CAPITOL DR., 29' RT.	8	8
41+18	CAPITOL DR., 37' RT.	3	3
42+40	CAPITOL DR., 29' RT.	28	28
42+63	CAPITOL DR., 36' RT.	4	4
43+81	CAPITOL DR., 25' RT.	24	24
44+42	CAPITOL DR., 29' RT.	5	5
44+67	CAPITOL DR., 29' RT.	10	10
TOTALS		114	114

REMOVING FENCE

STATION TO STATION	LOCATION	TYPE	L.F.
7"SB"+93 - 9"SB"+74	28' LT.	CHAIN LINK	190
41+12	28' RT.	CHAIN LINK	32
41+70 - 42+73	27' RT.	CHAIN LINK	131
TOTALS			353

REMOVING ASPHALTIC SURFACE

STATION	LOCATION	S.Y.
8"NB"+77	OBLITERATE P.E. RT.	70
TOTALS		70

SAWING EXISTING PAVEMENT

STATION	LOCATION	L.F.
3"NB"+00	LYNNDALE DR.	32
5"SB"+54 - 7"SB"+83	PARKING LOT LT.	229
8"NB"+78	P.E., 96' RT.	10
16"NB"+45	F.E. RT.	24
17"NB"+00	LYNNDALE DR.	26
40+15	CAPITOL DR.	40
45+15	P.E. RT.	14
46+60	CAPITOL DR.	75
TOTALS		450

EARTHWORK SUMMARY

STATION TO STATION	UNCL. EXC. C.Y.	FILL C.Y.	FILL EXPANSION	WASTE C.Y.
3"NB"+00 - 17"NB"+00	4303	1101	30%	2872
40+15 - 42+85	852	352	30%	394
43+42 - 47+00	1291	393	30%	780
TOTALS	6446	1846		4046

BREAKER RUN STONE

STATION TO STATION	LOCATION	TON
3"NB"+00 - 17"NB"+00	LYNNDALE DR.	3564
40+15 - 42+22	CAPITOL (WEST)	356
44+05 - 47+00	CAPITOL (EAST)	480
TOTALS		4400

CROSS DRAINS

STATION	LOCATION	DIAMETER INCHES	LENGTH FEET	TYPE	CLASS	THICKNESS STEEL INCH	THICKNESS ALUMINUM INCH	APRON ENDWALLS EACH	** SOD S.Y.	** SILT FENCE L.F.
5"NB"+28.50	C.T.H. "A"	30	70	C.P.	III	0.079	0.075	2	19	20
15"NB"+63	C.T.H. "A"	24	64	C.P.	III	0.079	0.075	2	14	20
						TOTALS			33	40

** QUANTITY INCLUDED ELSEWHERE

PRIVATE ENTRANCE PIPES

STATION	LOCATION	DIAMETER INCHES	LENGTH FEET	TYPE	CLASS	THICKNESS STEEL INCH	THICKNESS ALUMINUM INCH	APRON ENDWALLS EACH	** SOD S.Y.
12"NB"+59	C.T.H. "A", RT.	18	52	C.P.	III	0.064	0.060	2	9
						TOTALS			9

** QUANTITY INCLUDED ELSEWHERE

CRUSHED AGGREGATE BASE COURSE

STATION TO STATION	LOCATION	ROADWAY TON	SHOULDER TON
3"NB"+00 - 17"NB"+00	LYNNDALE DR.	3962	277
40+15 - 42+22	CAPITOL (WEST)	402	10
44+05 - 47+00	CAPITOL (EAST)	536	20
P.E.			409
UNDER SIDEWALK			84
TOTALS		4900	800

CONCRETE LOADING ZONE

STATION TO STATION	LOCATION	S.F.
4"NB"+32 - 7"NB"+30	LYNNDALE DR.	2530
8"NB"+00 - 9"NB"+38	LYNNDALE DR.	819
10"NB"+62 - 14"NB"+25	LYNNDALE DR.	3904
14"NB"+95 - 15"NB"+49	LYNNDALE DR.	297
TOTALS		7550

CONCRETE CORRUGATED MEDIAN

STATION TO STATION	LOCATION	S.F.
14"NB"+25 - 14"NB"+95	LYNNDALE DR.	590

CONCRETE CURB & GUTTER, 30-INCH, TYPE "D"

STATION TO STATION	LOCATION	L.F.
4"SB"+00 - 9"SB"+19	LT.	519
7"NB"+50 - 9"NB"+22	RT.	172
C.T.H. "A" SW RADIUS		94
C.T.H. "A" SE RADIUS		94
C.T.H. "A" NW RADIUS		94
C.T.H. "A" NE RADIUS		94
10"SB"+78 - 12"SB"+00	LT.	122
40+33 - 42+30	LT.	197
40+75 - 42+22	RT.	147
44+01 - 45+40	LT.	139
45+05 - 48+50	RT.	245
TOTALS		1917

CONCRETE SIDEWALK, 4-INCH

STATION TO STATION	LOCATION	S.F.
40+75 - 40+83	RT.	40
41+07 - 41+23	RT.	80
41+47 - 42+46	RT.	495
42+46 - 42+76	RT.	280
42+46 - 42+86	LT.	315
43+45 - 43+79	LT.	290
43+49 - 43+79	RT.	245
43+79 - 46+05	RT.	1130
46+25 - 46+93	RT.	340
47+17 - 48+00	RT.	415
TOTALS		3630

ASPHALTIC FLUMES

STATION	LOCATION	S.Y.
7"NB"+50	LYNNDALE DR., 24' RT.	7
TOTALS		7

CONCRETE SIDEWALK, 6-INCH

STATION TO STATION	LOCATION	S.F.
40+83 - 41+07	RT.	120
41+23 - 41+47	RT.	120
46+05 - 46+25	RT.	100
46+93 - 47+17	RT.	120
TOTALS		460

CONCRETE DRIVEWAY

STATION	LOCATION	S.Y.
40+94	RT.	23
41+37	RT.	23
TOTALS		46

SALVAGED TOPSOIL, MULCHING, FERTILIZER AND SEEDING

STATION TO STATION	LOCATION	SALVAGED TOPSOIL S.Y.	MULCHING S.Y.	FERTILIZER CWT.	SEED NO. 40 LBS.
3"NB"+00 - 17"NB"+00	LYNNDALE DR.	6001	6001	4.3	112
40+15 - 42+85	CAPITOL (WEST)	1741	1741	1.3	32
43+42 - 48+00	CAPITOL (EAST)	1669	1669	1.2	31
7"NB"+81, RT.	RELOCATE P.E.	122	122	0.1	2
8"NB"+75, RT.	REMOVE P.E.	167	167	0.1	3
TOTALS		9700	9700	7.0	180

SODDING AND SILT FENCE, DELIVERED, INSTALLED & MAINTAINED

LOCATION	SOD S.Y.	SILT FENCE DELIVERED L.F.	SILT FENCE INSTALLED L.F.	SILT FENCE MAINTENANCE L.F.
CROSS DRAINS	33	40	40	80
P.E. PIPES	9	---	---	---
STORM SEWER STRUCTURES	35	90	90	180
TOTALS	77	130	130	260

SINGLE AGGREGATE ASPHALTIC PAVEMENT, TYPE D1

STATION TO STATION	LOCATION	PAV'T. DEPTH INCHES	ASPHALTIC PAVEMENT TONS	ASPHALTIC MAT'L. FOR PAV'T. TONS	ASPHALTIC MAT'L. FOR TACK COAT GAL.
3"NB"+00 - 17"NB"+00	LYNNDALE DR.	5-1/2"	2428	155	364
40+15 - 42+22	CAPITOL (WEST)	5-1/2"	277	18	42
44+05 - 47+00	CAPITOL (EAST)	5-1/2"	364	23	54
DRIVEWAYS		2"	71	4	---
TOTALS			3140	200	460

OMNNI CAD FILE NO. E650\E65001

STATE PROJECT NUMBER	SHEET NO.
6521-2-71	3B

DETAIL SUMMARY OF MISCELLANEOUS QUANTITIES

TRAFFIC SIGNAL FACES. *

FACE NUMBER	SIGNAL BASE NUMBER	3-12 VERTICAL EACH	5-12 VERTICAL EACH
A-1	SB-8	1	--
A-2	SB-2	--	1
A-3	SB-1	1	--
A-4	SB-9	--	1
B-1	SB-6	1	--
B-2	SB-5	--	1
B-3	SB-4	--	1
C-1	SB-3	1	--
C-2	SB-9	--	1
C-3	SB-10	1	--
C-4	SB-2	--	1
D-1	SB-5	1	--
D-2	SB-6	1	--
D-3	SB-7	1	--
TOTALS		8	6

* ALL SIGNAL HEADS TO HAVE BACKPLATES

NON-PARTICIPATING

PULL BOXES.

BOX NUMBER	STATION	LOCATION	(SIZE) 12"X24" EACH	(SIZE) 24"X36" EACH
PB-1	10"NB"+38	CTH "A" 43' RT.	--	1
PB-2	10"NB"+68	CTH "A" 4' LT.	--	1
PB-3	10"SB"+37	CTH "A" 37' LT.	--	1
PB-4	9"SB"+56	CTH "A" 36' LT.	--	1
PB-5	9"SB"+32	CTH "A" 4' RT.	--	1
PB-6	9"NB"+57	CTH "A" 45' RT.	--	1
PB-7	44+30	CAP. DR. 23' RT.	1	--
PB-8	43+90	CAP. DR. 23' RT.	1	--
PB-9	11"SB"+08	CTH "A" 23' LT.	1	--
PB-10	12"SB"+68	CTH "A" 23' LT.	1	--
PB-11	42+37	CAP. DR. 23' LT.	1	--
PB-12	8"NB"+92	CTH "A" 33' RT.	1	--
PB-13	7"NB"+32	CTH "A" 33' RT.	1	--
TOTALS			7	6

NON-PARTICIPATING

LOOP DETECTOR CONDUIT, WIRE, SIZE AND AMPLIFIER

NUMBER	LOCATION	LOOP DETECTOR CONDUIT, 1-INCH L.F.	LOOP DETECTOR WIRE L.F.	LOOP DETECTOR SIZE	LEAD IN WIRE L.F.	AMPLIFIER EACH
21	7"NB"+32 CTH "A"	63	178	6 X 20	331	1
51	8"NB"+92 CTH "A"	108	216	6 X 30	171	1
11	11"SB"+08 CTH "A"	98	196	6 X 30	216	1
61	12"SB"+68 CTH "A"	46	164	6 X 12	376	1
41	42+37 CAP. DR.	52	146	6 X 15	250	1
31	44+30 CAP. DR.	92	184	6 X 30	101	1
81	43+90 CAP. DR.	32	64	6 X 6	75	1
TOTALS		491	1148		1520	7

NON-PARTICIPATING

CONCRETE BASES, TRAFFIC SIGNAL STANDARDS, POLES, AND PEDESTRIAN SIGNAL FACES

NUMBER	STATION	LOCATION	CONCRETE BASES TYPE 1 EACH	CONCRETE CONTROL CABINET BASES TYPE 9 EACH	TRAFFIC SIGNAL STANDARDS 15-FEET EACH	PEDESTRIAN SIGNAL FACES 12-INCH EACH	PEDESTRIAN PUSH BUTTON EACH	PEDESTAL BASES EACH
SB-1	10"NB"+63 CTH "A"	26' RT.	1	--	1	1	1	1
SB-2	10"NB"+72 CTH "A"	4' LT.	1	--	1	--	--	1
SB-3	10"SB"+63 CTH "A"	21' LT.	1	--	1	1	1	1
SB-4	42+40 CAP. DR.	27' LT.	1	--	1	1	1	1
SB-5	42+40 CAP. DR.	27' RT.	1	--	1	1	1	1
SB-6	43+85 CAP. DR.	26' LT.	1	--	1	1	1	1
SB-7	43+77 CAP. DR.	31' RT.	1	--	1	1	1	1
SB-8	9"NB"+37 CTH "A"	31' RT.	1	--	1	1	1	1
SB-9	9"SB"+28 CTH "A"	4' RT.	1	--	1	--	--	1
SB-10	9"SB"+37 CTH "A"	29' LT.	1	--	1	1	1	1
CB-1	43+82 CAP. DR.	42' LT.	--	1	--	--	--	--
		TOTALS	10	1	10	8	8	10

NON-PARTICIPATING

NONMETALLIC CONDUIT & TRAFFIC SIGNAL CABLE

LOCATION FROM	LOCATION TO	NONMETALLIC CONDUIT 1-INCH L.F.	NONMETALLIC CONDUIT 3-INCH L.F.	TRAFFIC SIGNAL CABLE 20 CONDUCTOR NO. 12 L.F.
CB-1	PB-1	--	48 (2 @ 24)	60
PB-1	SB-6	--	25	37
PB-1	SB-1	--	32	44
PB-1	PB-2	--	56	72
PB-1	PB-6	--	82	98
PB-1	PB-7	77	--	--
PB-2	SB-2	--	6	18
PB-2	PB-3	--	61	77
PB-3	SB-3	--	33	45
PB-3	PB-10	235	--	--
PB-3	SB-4	--	30	52
PB-3	PB-4	--	81	97
PB-4	SB-5	--	32	44
PB-4	PB-11	32	--	--
PB-4	SB-10	--	22	34
PB-4	PB-5	--	47	63
PB-5	SB-9	--	6	18
PB-5	PB-6	--	65	81
PB-6	PB-13	225	--	--
PB-6	SB-7	--	20	32
PB-6	SB-8	--	26	38
TOTALS		569	672	930

NON-PARTICIPATING

TEMPORARY PAVEMENT MARKING

LOCATION	4-INCH (EDGELINE, WHITE) L.F.	4-INCH (NO PASSING, YELLOW) L.F.
CAPITOL DR. (WEST)	460	460
CAPITOL DR. (EAST)	600	600
TOTALS	1,060	1,060

LANDMARK REFERENCE MONUMENTS

STATION	LOCATION	DESCRIPTION	EACH
10+NB"+00	INTERSECTION OF LYNNDALE DR. & CAPITOL DR.	CENTER OF SECTION 16 (T-21-N) (R-17-E)	4

TRAFFIC CONTROL DRUMS AND WARNING LIGHTS

STATION TO STATION	LOCATION	APPROXIMATE SERVICE PERIOD DAYS	NUMBER IN SERVICE	DRUM DAYS	WARNING LIGHT DAYS
UNDISTRIBUTED	SIDE RDS. & P.E.'S	83	30	2490	2490

PAVEMENT MARKING, PREFORMED PLASTIC

STATION TO STATION	4-INCH (EDGELINE, WHITE) L.F.	4-INCH (NO PASSING, YELLOW) L.F.	8-INCH (CHANNELIZING, WHITE) L.F.
3"SB"+00 - 4"SB"+00	100	---	---
3"NB"+00 - 4"NB"+34	---	134	---
3"SB"+00 - 4"SB"+34	---	134	---
3"NB"+00 - 7"NB"+50	450	---	---
7"NB"+15 - 9"NB"+32	---	---	217
7"NB"+50 - 9"NB"+32	---	---	182
10"SB"+68 - 11"SB"+65	---	---	97
10"NB"+81 - 17"NB"+00	619	---	---
12"SB"+00 - 17"SB"+00	500	---	---
15"NB"+49 - 17"NB"+00	---	151	---
15"SB"+49 - 17"SB"+00	---	151	---
40+15 - 40+75	60	---	---
40+15 - 40+33	18	---	---
40+15 - 42+34	---	436	---
41+35 - 42+34	---	---	99
43+90 - 47+00	---	620	---
43+90 - 45+40	---	---	150
45+40 - 47+00	160	---	---
46+50 - 46+60	10	---	---
TOTALS	1917	1628	745

PAVEMENT MARKING, PREFORMED PLASTIC

STATION	LOCATION	6-INCH, CROSSWALK (SOLID WHITE) L.F.	18-INCH, STOP LINE (SOLID WHITE) L.F.
9+32	LYNNDALE DR.	---	37
9+41	LYNNDALE DR.	136	---
10+59	LYNNDALE DR.	112	---
10+68	LYNNDALE DR.	---	25
42+34	CAPITOL DR.	---	25
42+43	CAPITOL DR.	84	---
43+81	CAPITOL DR.	90	---
43+90	CAPITOL DR.	---	25
TOTALS		422	112

PAVEMENT MARKING, PREFORMED PLASTIC

STATION	LOCATION	ARROWS, TYPE 1 EACH	ARROWS, TYPE 2 EACH	WORDS, "ONLY" EACH
7"NB"+56	LYNNDALE DR.	---	---	1
8"NB"+00	LYNNDALE DR.	---	1	---
8"NB"+74	LYNNDALE DR.	---	---	3
9"NB"+16	LYNNDALE DR.	1	2	---
10"SB"+84	LYNNDALE DR.	---	1	---
11"SB"+26	LYNNDALE DR.	---	---	1
41+76	CAPITOL DR.	---	---	1
42+18	CAPITOL DR.	---	1	---
44+06	CAPITOL DR.	---	1	---
44+48	CAPITOL DR.	---	---	1
TOTALS		1	6	7

PAVEMENT MARKING, EPOXY

STATION	LOCATION	(SAFETY) ISLAND NOSES (YELLOW) S.F.	CURB RAMP 4-INCH (YELLOW) L.F.
4+34	LYNNDALE DR.	7	---
7+27	LYNNDALE DR.	14	---
8+03	LYNNDALE DR.	14	---
9+35	LYNNDALE DR.	14	---
9+40	LYNNDALE DR.	---	48
10+60	LYNNDALE DR.	---	48
10+65	LYNNDALE DR.	14	---
15+49	LYNNDALE DR.	7	---
42+45	CAPITOL DR.	---	48
43+80	CAPITOL DR.	---	48
TOTALS		70	192

R/W PROJECT NUMBER	SHEET NUMBER	TOTAL SHEETS
6521-02-00	4.0	
FEDERAL PROJECT NUMBER		

PLAT OF RIGHT OF WAY REQUIRED FOR

LYNNDALE DR. & CAPITOL DR. INTERSECTION
(TOWN OF GRAND CHUTE)
C.T.H. "A"
OUTAGAMIE COUNTY

SCALE 0 50 100 200 FT.

DATE MARCH 28, 1989

REVISION DATE MAY 15, 1989

6521-02-71 | 4.0

SCHEDULE OF LANDS & INTERESTS REQUIRED

PARCEL NUMBER	SHEET NUMBER	OWNER	INTEREST * REQUIRED	L.H.E. ACRES TEMP.	L.H.E. ACRES PERM.	R/W ACRES REQ'D. NEW	R/W ACRES REQ'D. EXISTING	R/W ACRES REQ'D. TOTAL	TOTAL ACRES REM.
1	4.0	G. & S. INVESTMENTS, INC.	L.H.E.	0.02	—	—	—	—	—
2	4.0	APPLETON AREA SCHOOL DISTRICT, A WISCONSIN MUNICIPAL CORPORATION	FEE TITLE & L.H.E.	0.17	—	0.13	0.72	0.85	4.87
3	4.0	MARK A. VIVODA & REBECCA R. VIVODA	FEE TITLE & L.H.E.	0.12	—	0.01	0.42	0.43	1.16
4	4.0	ROBERT W. PRICE & ELIZABETH A PRICE	L.H.E.	0.07	—	—	—	—	—
6	4.0	JAMES D. MORISETTE & MICHELLE A. MORISETTE	FEE TITLE & L.H.E.	0.07	—	0.02	—	0.02	0.34
7	4.0	MARIE GRIESBACH, LAND CONTRACT VENDOR THE APPLETON COMMUNITY EVANGELICAL FREE CHURCH, LAND CONTRACT VENDEE	FEE TITLE & L.H.E.	0.06	—	0.17	0.26	0.43	4.83
8	4.0	LYNN P. LeROCK & JOYCE C. LeROCK	L.H.E.	0.03	—	—	—	—	—
9	4.0	DAVID J. EBBEN & SUEZETE A. EBBEN	L.H.E.	0.03	—	—	—	—	—
10	4.0	JONATHAN J. OLIG & ANN M. OLIG	L.H.E.	0.01	—	—	—	—	—
11	4.0	JEROME G. GREVE & AUDREY M. GREVE	L.H.E.	0.05	—	—	—	—	—
12	4.0	EWALD GREVE & ELINORE GREVE	L.H.E.	0.02	—	—	—	—	—
13	4.0	ROLAND W. CAPTAIN & RUTH E. CAPTAIN	L.H.E.	0.02	—	—	—	—	—
14	4.0	WISCONSIN BELL, INC.	RELEASE OF RIGHTS	—	—	—	—	—	—
15	4.0	WISCONSIN ELECTRIC POWER COMPANY	RELEASE OF RIGHTS	—	—	—	—	—	—

*ACQUIRED IN THE NAME OF OUTAGAMIE COUNTY.

Conventional Signs and Abbreviations

- SECTION LINE
- QUARTER LINE
- TOWNSHIP AND RANGE LINE
- PROPOSED OR NEW CENTERLINE
- PROPOSED OR NEW R/W LINE
- EXISTING R/W LINE
- PL. PROPERTY LINE
- SLOPE INTERCEPTS
- LIMITED HIGHWAY EASEMENT
- R/W POINT
- FENCE
- SECTION OR QUARTER CORNER
- POWER POLE
- TELEPHONE PEDESTAL
- T UNDERGROUND TELEPHONE CABLE
- G UNDERGROUND GAS MAIN
- W UNDERGROUND WATER MAIN
- SAN UNDERGROUND SANITARY SEWER

AC	ACRES	N	NORTH
ETUX	AND WIFE	P.C.	POINT OF CURVATURE
Δ	CENTRAL ANGLE	P.I.	POINT OF INTERSECTION
COR.	CORNER	P.T.	POINT OF TANGENCY
C.T.H	COUNTY TRUNK HIGHWAY	R	RADIUS
D	DEGREE OF CURVE	R/W	RIGHT OF WAY
E	EAST	SEC.	SECTION
L	LENGTH OF CURVE	S	SOUTH
L.H.E.	LIMITED HIGHWAY EASEMENT	STA.	STATION
LC	LONG CHORD	T.	TOWN
LCB	LONG CHORD BEARING	T	TANGENT LENGTH OF CURVE
MI	MILE	W	WEST
R.	RANGE		

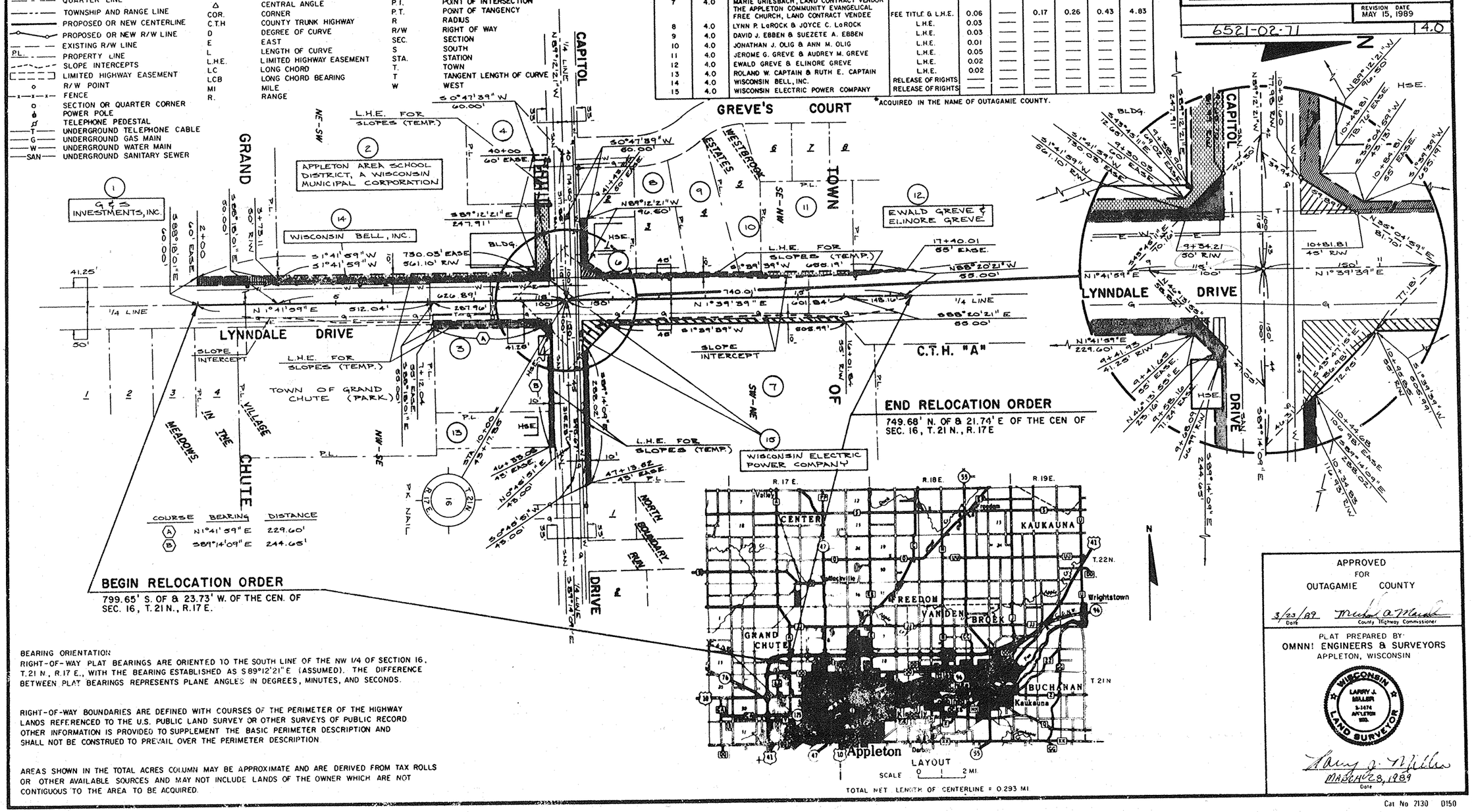

BEARING ORIENTATION
RIGHT-OF-WAY PLAT BEARINGS ARE ORIENTED TO THE SOUTH LINE OF THE NW 1/4 OF SECTION 16, T.21 N., R.17 E., WITH THE BEARING ESTABLISHED AS S 89°12'21"E (ASSUMED). THE DIFFERENCE BETWEEN PLAT BEARINGS REPRESENTS PLANE ANGLES IN DEGREES, MINUTES, AND SECONDS.

RIGHT-OF-WAY BOUNDARIES ARE DEFINED WITH COURSES OF THE PERIMETER OF THE HIGHWAY LANDS REFERENCED TO THE U.S. PUBLIC LAND SURVEY OR OTHER SURVEYS OF PUBLIC RECORD OTHER INFORMATION IS PROVIDED TO SUPPLEMENT THE BASIC PERIMETER DESCRIPTION AND SHALL NOT BE CONSTRUED TO PREVAIL OVER THE PERIMETER DESCRIPTION

AREAS SHOWN IN THE TOTAL ACRES COLUMN MAY BE APPROXIMATE AND ARE DERIVED FROM TAX ROLLS OR OTHER AVAILABLE SOURCES AND MAY NOT INCLUDE LANDS OF THE OWNER WHICH ARE NOT CONTIGUOUS TO THE AREA TO BE ACQUIRED.

APPROVED
FOR
OUTAGAMIE COUNTY

3/23/89 Date — County Highway Commissioner

PLAT PREPARED BY:
OMNNI ENGINEERS & SURVEYORS
APPLETON, WISCONSIN

WISCONSIN LARRY J. MILLER S-1474 APPLETON WIS. LAND SURVEYOR

MARCH 28, 1989
Date

Cat No 7130 0150

E-650

STATE PROJECT NUMBER	SHEET NO.
6521-2-71	5.0

LYNNDALE DRIVE

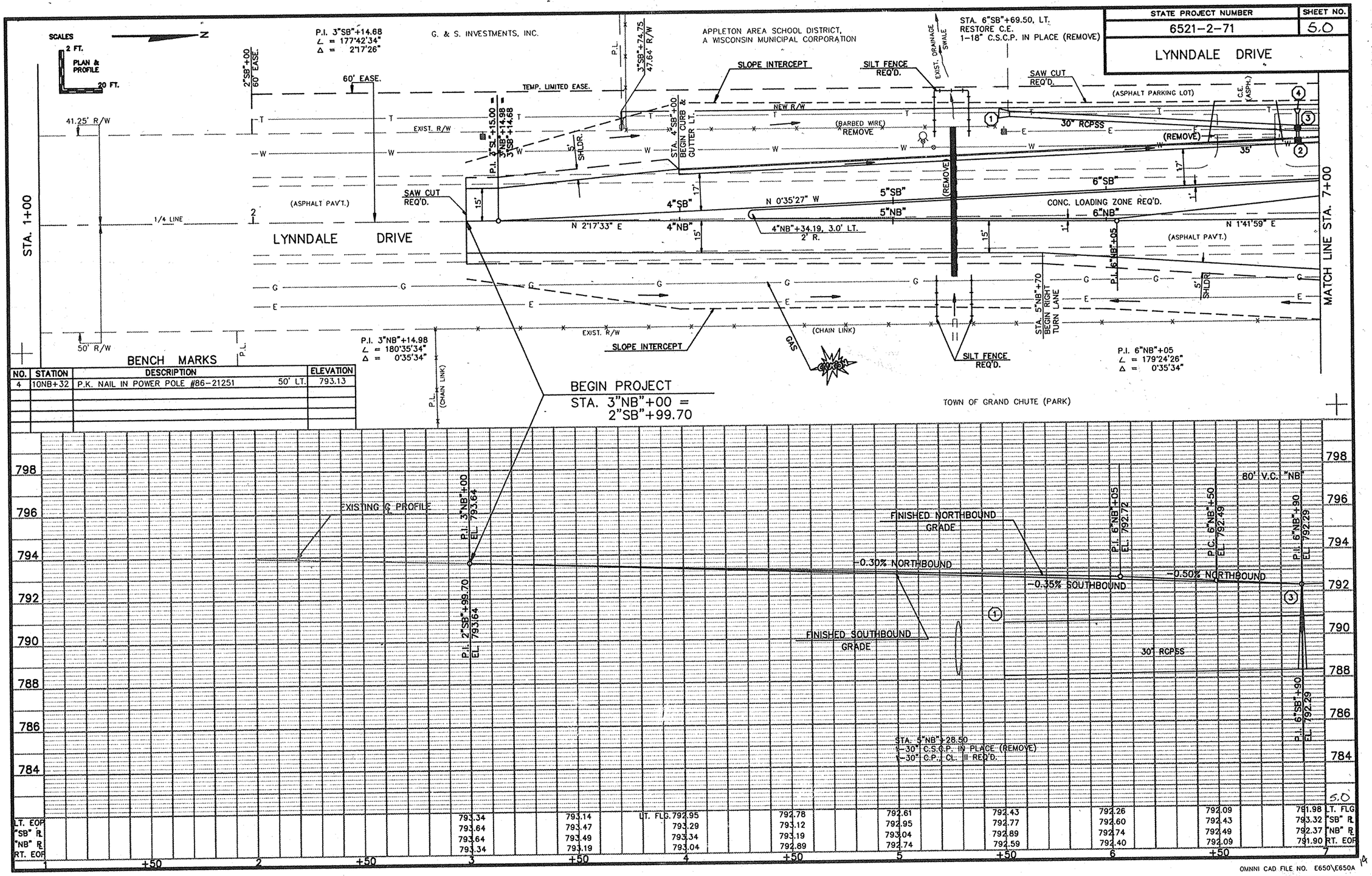

BENCH MARKS

NO.	STATION	DESCRIPTION		ELEVATION
4	10NB+32	P.K. NAIL IN POWER POLE #86-21251	50' LT.	793.13

OMNNI CAD FILE NO. E650\E650A

14

STATE PROJECT NUMBER	SHEET NO.
6521-2-71	5.1

LYNNDALE DRIVE

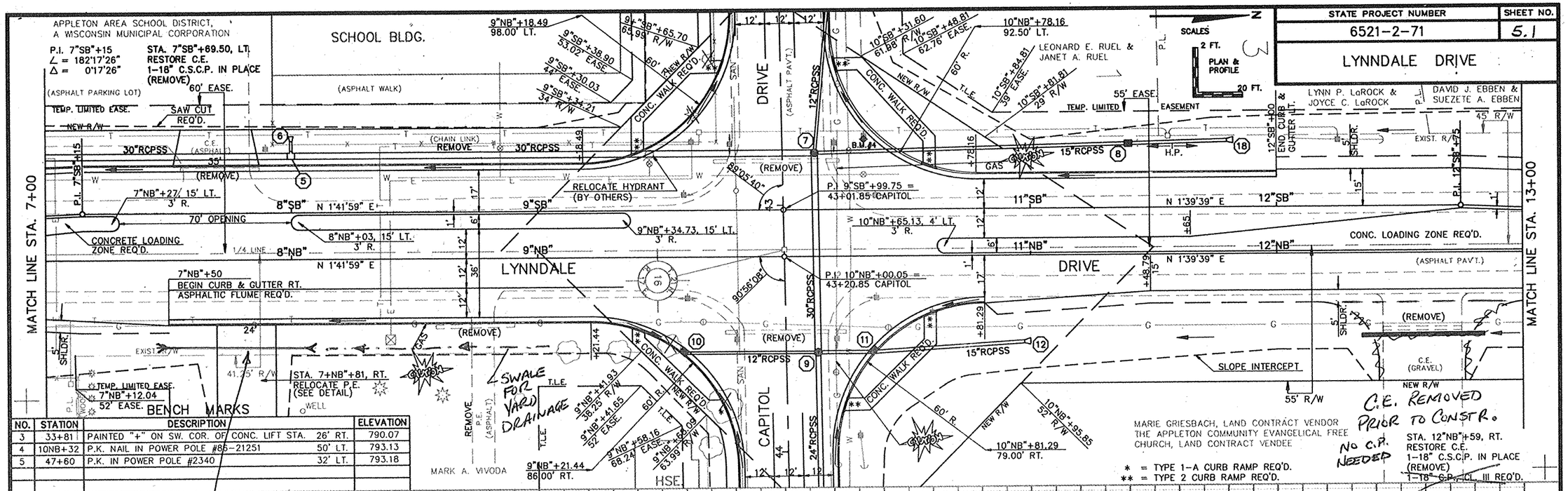

NO.	STATION	DESCRIPTION		ELEVATION
3	33+81	PAINTED "+" ON SW. COR. OF CONC. LIFT STA.	26' RT.	790.07
4	10NB+32	P.K. NAIL IN POWER POLE #86-21251	50' LT.	793.13
5	47+60	P.K. IN POWER POLE #2340	32' LT.	793.18

OMNNI CAD FILE NO. E650\E650B

STATE PROJECT NUMBER	SHEET NO.
6521-2-71	5.2

LYNNDALE DRIVE

SCALES
2 FT.
PLAN & PROFILE
20 FT.

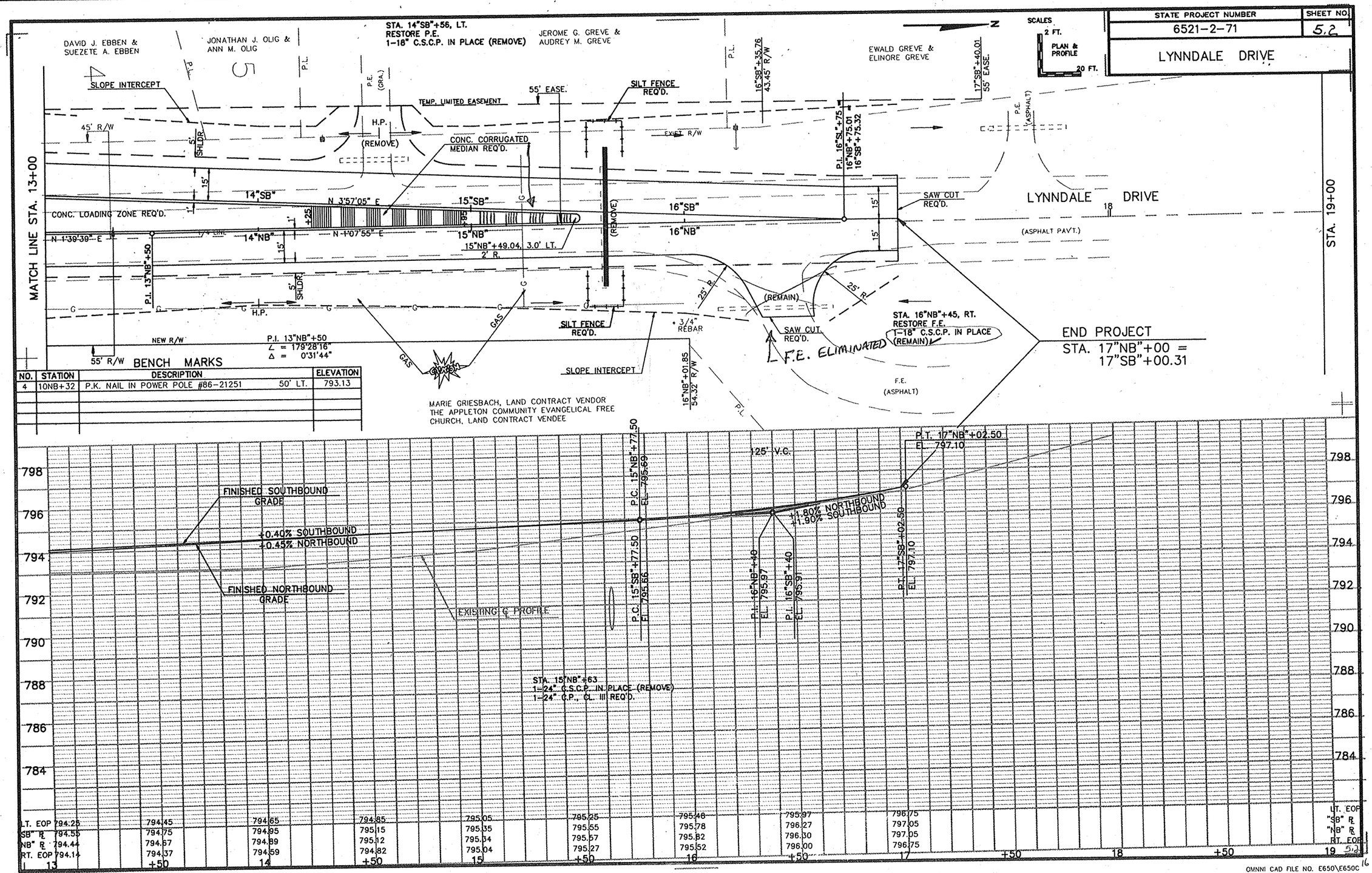

BENCH MARKS

NO.	STATION	DESCRIPTION		ELEVATION
4	10NB+32	P.K. NAIL IN POWER POLE #86-21251	50' LT.	793.13

OMNNI CAD FILE NO. E650\E650C

STATE PROJECT NUMBER	SHEET NO.
6521-2-71	5.3

CAPITOL DRIVE

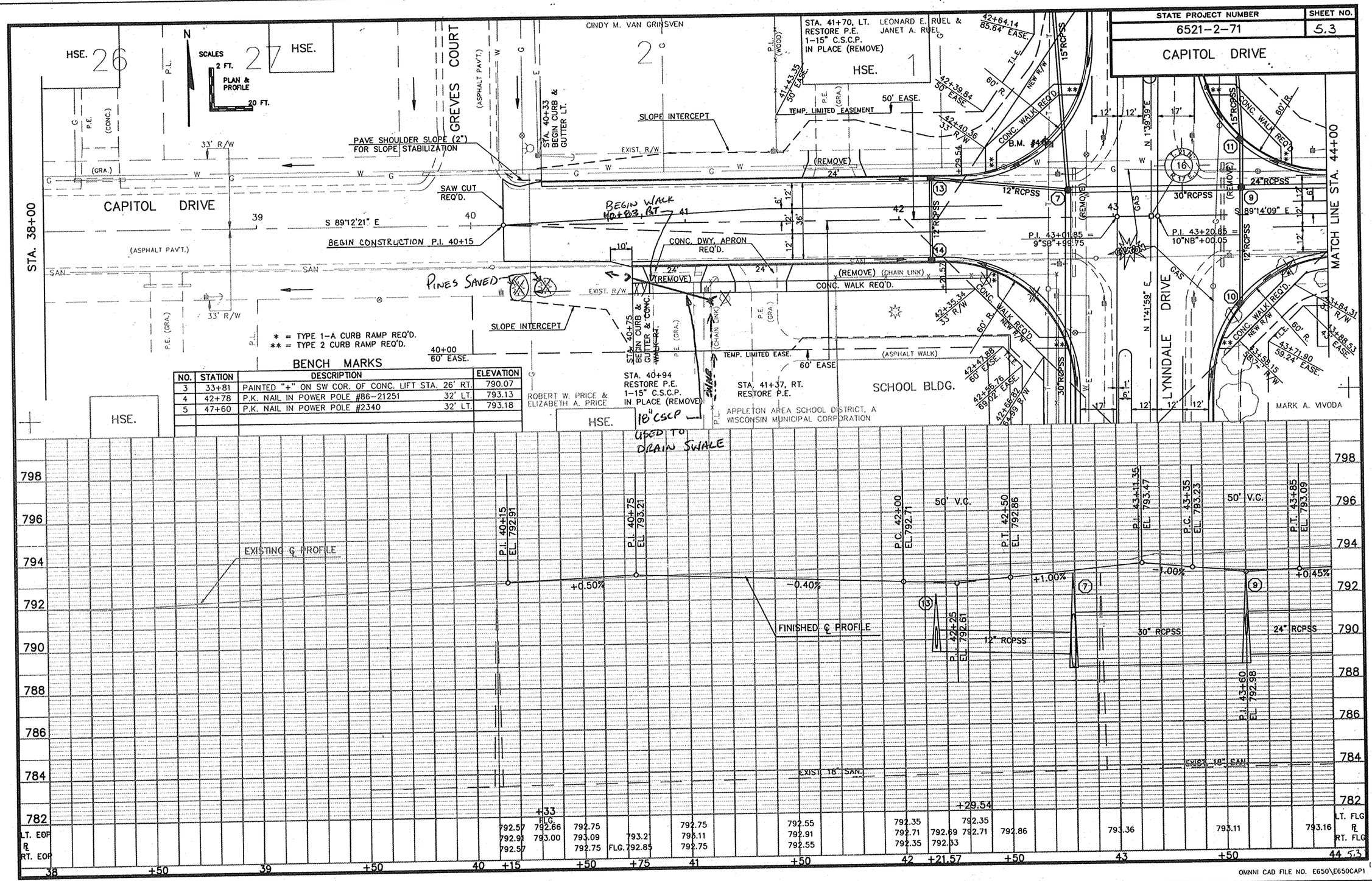

BENCH MARKS

NO.	STATION	DESCRIPTION	ELEVATION
3	33+81	PAINTED "+" ON SW COR. OF CONC. LIFT STA. 26' RT.	790.07
4	42+78	P.K. NAIL IN POWER POLE #86-21251 32' LT.	793.13
5	47+60	P.K. NAIL IN POWER POLE #2340 32' LT.	793.18

STATE PROJECT NUMBER	SHEET NO.
6521-2-71	5.4

CAPITOL DRIVE

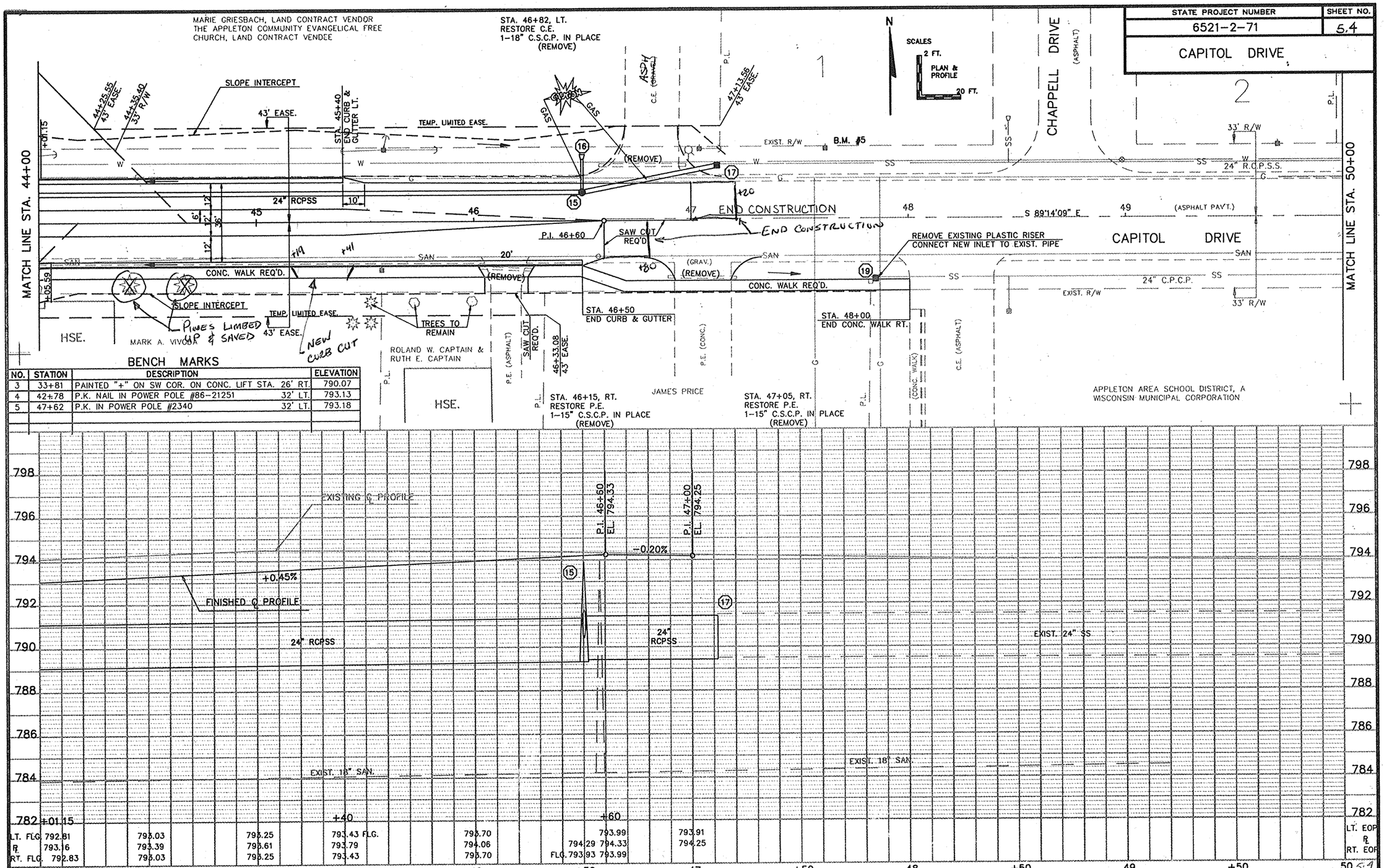

BENCH MARKS

NO.	STATION	DESCRIPTION		ELEVATION
3	33+81	PAINTED "+" ON SW COR. ON CONC. LIFT STA. 26' RT.		790.07
4	42+78	P.K. NAIL IN POWER POLE #86-21251	32' LT.	793.13
5	47+62	P.K. IN POWER POLE #2340	32' LT.	793.18

OMNNI CAD FILE NO. E650\E650CAP2

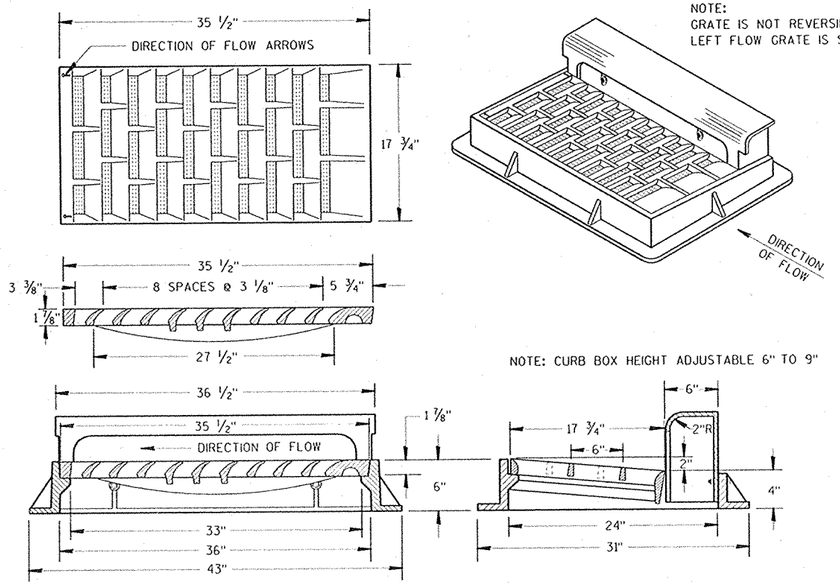

TYPE "H"

(APPROXIMATE WEIGHT 510 LBS.)

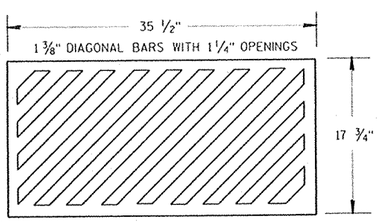

SPECIAL GRATE NO. 1

(APPROXIMATE WEIGHT 175 LBS.)

(NOTE AS TYPE H1 ON DRAINAGE TABLE)

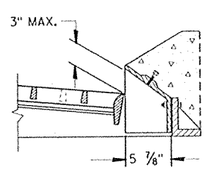

MOUNTABLE CURB BOX FOR TYPE "H" COVER

(FOR USE WITH TYPES G & J CONCRETE CURB & GUTTER, 30 INCH)

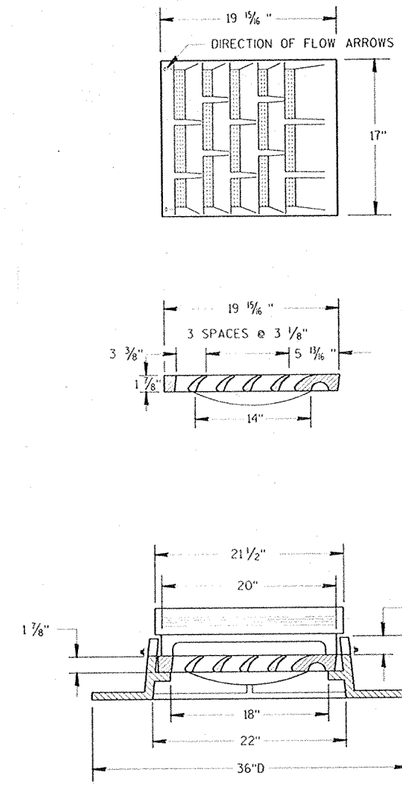

TYPE "A"

(APPROXIMATE WEIGHT 410 LBS.)

GENERAL NOTES

DETAILS OF CONSTRUCTION, MATERIALS AND WORKMANSHIP NOT SHOWN ON THIS DRAWING SHALL CONFORM TO THE PERTINENT REQUIREMENTS OF THE STANDARD SPECIFICATIONS AND THE APPLICABLE SPECIAL PROVISIONS.

DETAIL DRAWINGS FOR PROPOSED ALTERNATE DESIGNS FOR CATCH BASIN, MANHOLE AND INLET COVERS SHALL BE SUBMITTED TO THE ENGINEER FOR APPROVAL PROVIDING THAT SUCH ALTERNATE DESIGNS MAKE PROVISION FOR EQUIVALENT CAPACITY AND STRENGTH.

ROUND FRAMES AND COVERS SHALL HAVE CONTINUOUSLY MACHINED BEARING SURFACES TO PREVENT ROCKING AND RATTLING.

THE ACTUAL WEIGHT OF COVERS MAY VARY WITHIN 5 PERCENT, PLUS OR MINUS, OF THE APPROXIMATE WEIGHT.

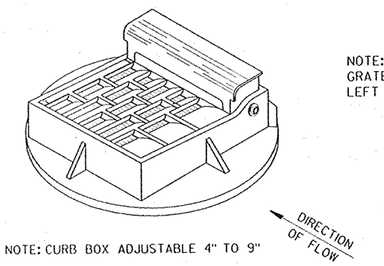

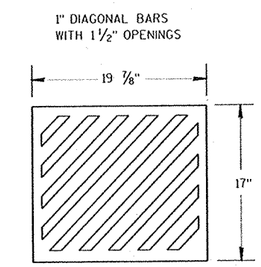

SPECIAL GRATE NO. 1

(APPROXIMATE WEIGHT 85 LBS.)

(NOTE AS TYPE A1 ON DRAINAGE TABLE)

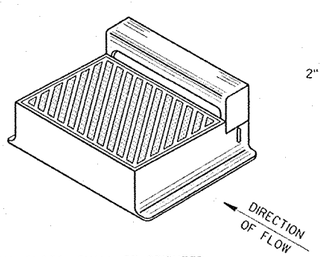

DIAGONAL SLOTS, SHALL BE ORIENTED TO THE DIRECTION OF FLOW AS ILLUSTRATED. GRATES ARE MANUFACTURED TO BE REVERSIBLE.

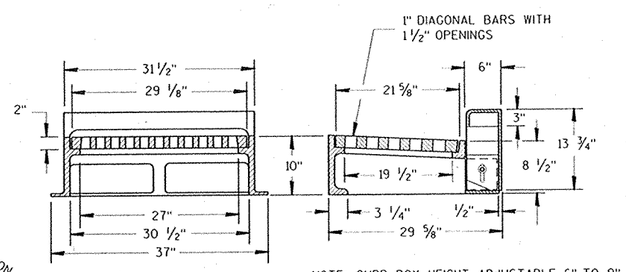

TYPE "WM"

(APPROXIMATE WEIGHT 650 LBS.)

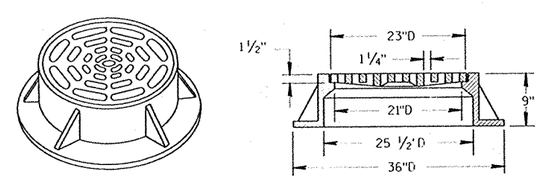

TYPE "C"

(APPROXIMATE WEIGHT 365 LBS.)

INLET COVERS

STATE OF WISCONSIN
DEPARTMENT OF TRANSPORTATION

APPROVED 11/30/90 DATE

STATE DESIGN ENGINEER FOR HWYS

FHWA

S.D.D. 8 A 5-8a

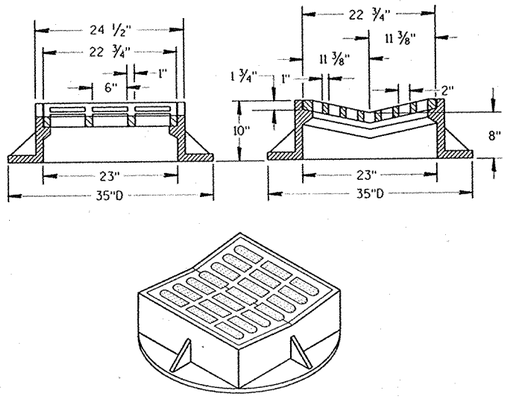

TYPE "B"

(APPROXIMATE WEIGHT 400 LBS.)

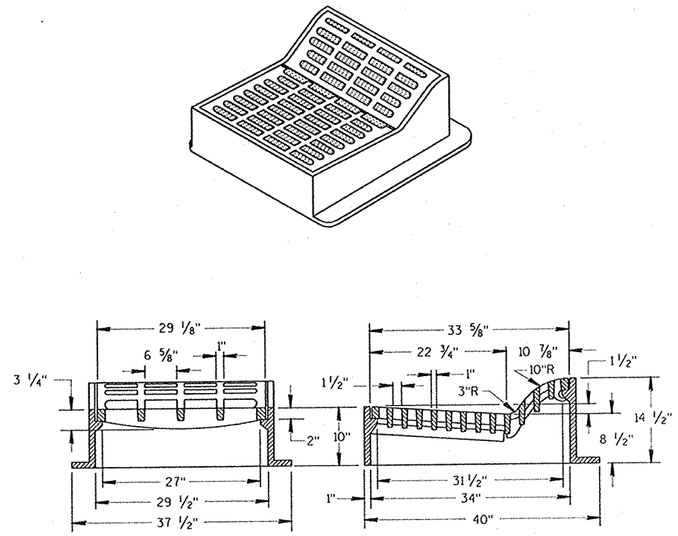

TYPE "F"①

(APPROXIMATE WEIGHT 835 LBS.)

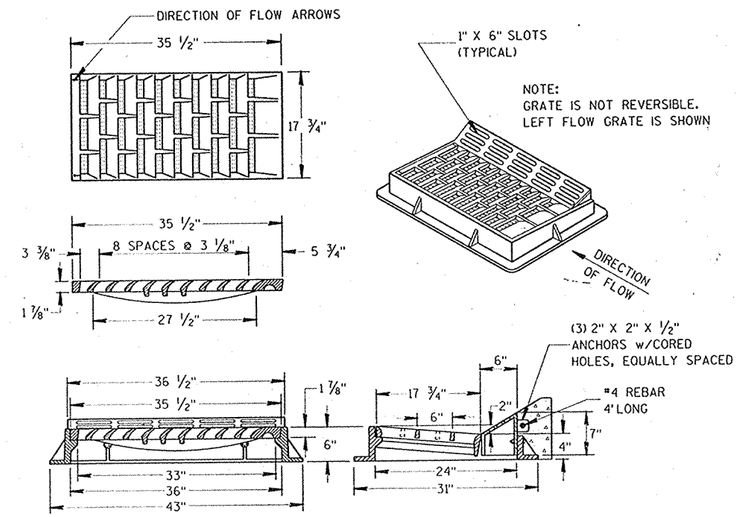

TYPE "HM"①

(APPROXIMATE WEIGHT 510 LBS.)

NOTE:
SPECIAL GRATE NO. 1 FOR THE TYPE "H" COVER MAY ALSO BE USED FOR THE TYPE "HM" COVER

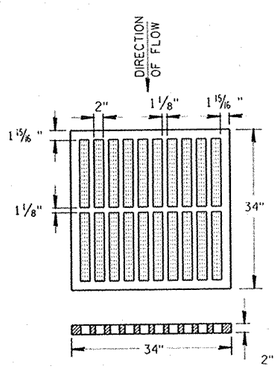

TYPE "MS"

(APPROXIMATE GRATE WEIGHT 285 LBS.)

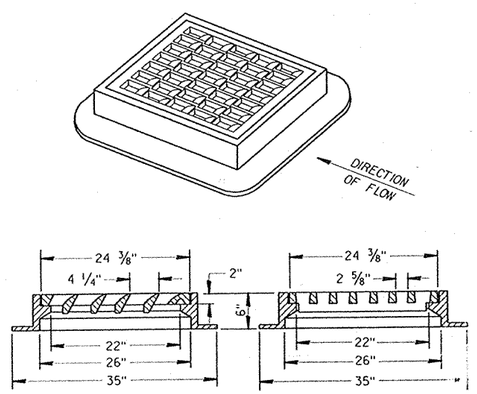

TYPE "S"

(APPROXIMATE WEIGHT 400 LBS.)

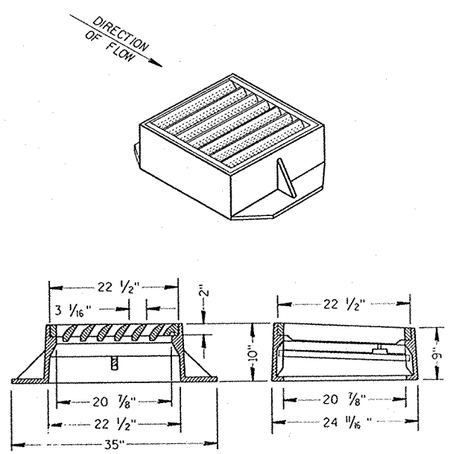

TYPE "V"

(APPROXIMATE WEIGHT 400 LBS.)

GENERAL NOTES

DETAILS OF CONSTRUCTION, MATERIALS AND WORKMANSHIP NOT SHOWN ON THIS DRAWING SHALL CONFORM TO THE PERTINENT REQUIREMENTS OF THE STANDARD SPECIFICATIONS AND THE APPLICABLE SPECIAL PROVISIONS.

DETAIL DRAWINGS FOR PROPOSED ALTERNATE DESIGNS FOR INLET COVERS SHALL BE SUBMITTED TO THE ENGINEER FOR APPROVAL PROVIDING THAT SUCH ALTERNATE DESIGNS MAKE PROVISION FOR EQUIVALENT CAPACITY AND STRENGTH.

THE ACTUAL WEIGHT OF COVERS MAY VARY WITHIN 5 PERCENT, PLUS OR MINUS, OF THE APPROXIMATE WEIGHT.

① FOR USE WITH CONCRETE CURB & GUTTER, 36 INCH.

INLET COVERS

STATE OF WISCONSIN
DEPARTMENT OF TRANSPORTATION

APPROVED
11/30/90
DATE

STATE DESIGN ENGINEER FOR HWYS

FHWA

S.D.D. 8 A 5-8b

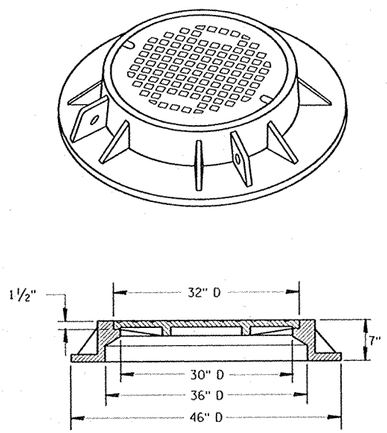

TYPE "K"

(APPROXIMATE WEIGHT 550 LBS.)

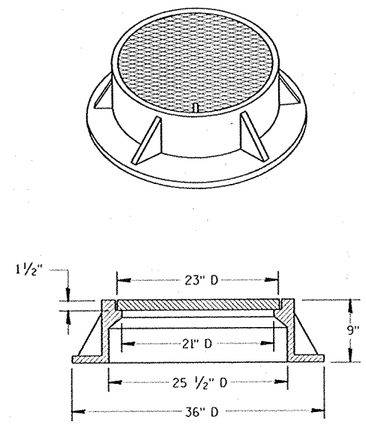

TYPE "J"

(APPROXIMATE WEIGHT 395 LBS.)

GENERAL NOTES

DETAILS OF CONSTRUCTION, MATERIALS AND WORKMANSHIP NOT SHOWN ON THIS DRAWING SHALL CONFORM TO THE PERTINENT REQUIREMENTS OF THE STANDARD SPECIFICATIONS AND THE APPLICABLE SPECIAL PROVISIONS.

DETAIL DRAWINGS FOR PROPOSED ALTERNATE DESIGNS FOR MANHOLE COVERS SHALL BE SUBMITTED TO THE ENGINEER FOR APPROVAL PROVIDING THAT SUCH ALTERNATE DESIGNS MAKE PROVISION FOR EQUIVALENT CAPACITY AND STRENGTH.

ROUND FRAMES AND COVERS SHALL HAVE CONTINUOUSLY MACHINED BEARING SURFACES TO PREVENT ROCKING AND RATTLING.

THE ACTUAL WEIGHT OF COVERS MAY VARY WITHIN 5 PERCENT, PLUS OR MINUS, OF THE APPROXIMATE WEIGHT.

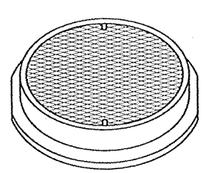

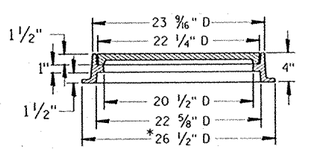

*THIS DIMENSION IS 25 1/2" ON BEVELED SIDE

TYPE "L"

(APPROXIMATE WEIGHT 146 LBS.)

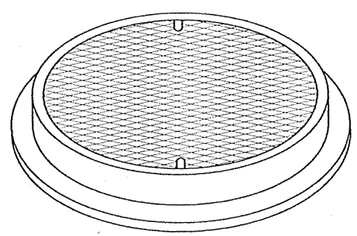

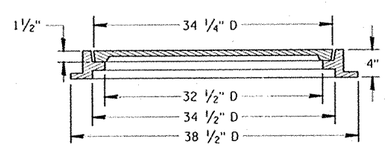

TYPE "M"

(APPROXIMATE WEIGHT 385 LBS.)

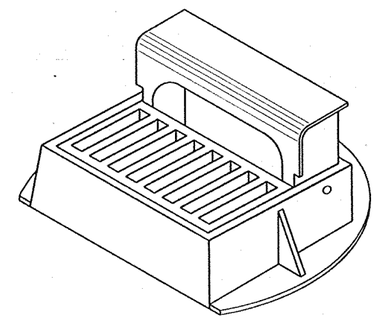

CURB BOX ADJUSTABLE 4" TO 10"

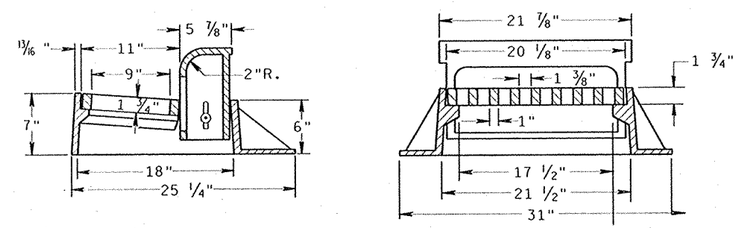

INLET COVER TYPE "Z"

(APPROXIMATE WEIGHT 270 LBS.)

INLET AND
MANHOLE COVERS

STATE OF WISCONSIN
DEPARTMENT OF TRANSPORTATION

APPROVED
11/30/90
DATE

STATE DESIGN ENGINEER FOR HWYS

FHWA

S.D.D. 8 A 5-8c

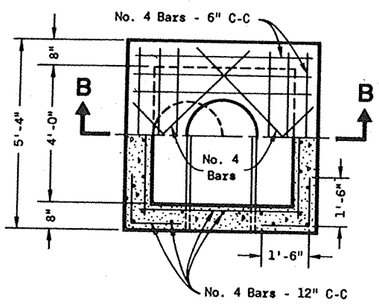

HALF SECTION **A-A**

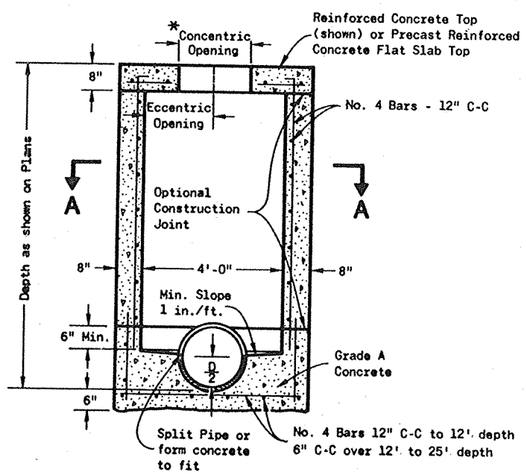

SECTION **B-B**
REINFORCED CONCRETE

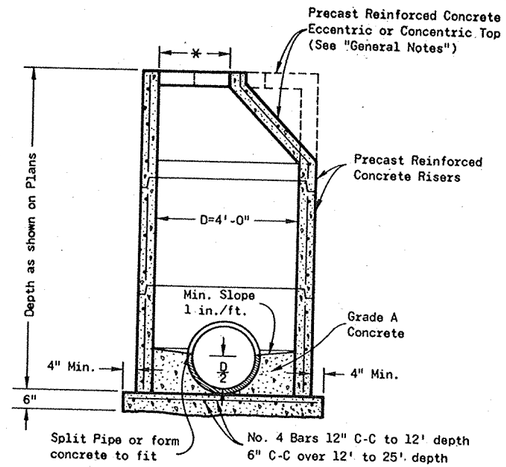

PRECAST REINFORCED CONCRETE

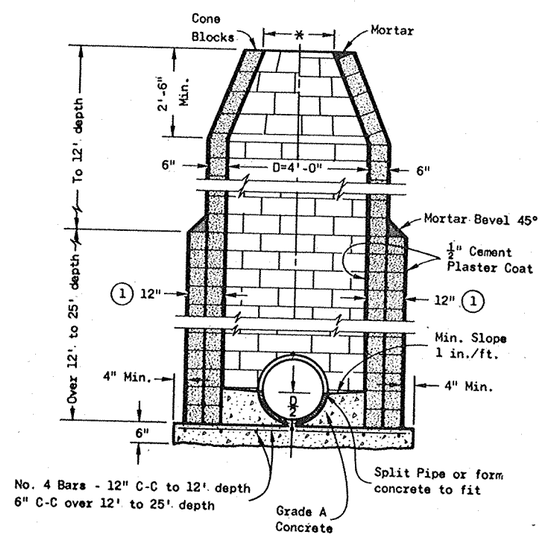

CONCRETE BLOCK

GENERAL NOTES

Details of construction, materials and workmanship not shown on this drawing shall conform to the pertinent requirements of the Standard Specifications and the applicable Special Provisions.

Detailed drawings for proposed alternate designs for underground drainage structures shall be submitted to the Engineer for approval providing that such alternate designs make provision for equivalent capacity and strength.

All drainage structures are designated on the plans as "Manholes 1-C" "Catch Basins 1-B", "Inlets 3-H", etc. The first digit designates the masonry portion of the structure, and the following letter designates the type of cover to be used to comprise the complete unit.

Precast Reinforced Bases shall be placed on a bed of material at least 6 inches in depth, which meets the requirements for Granular Backfill. This bedding shall be compacted and provide uniform support for the entire area of the base.

Precast Reinforced Concrete Cone Tops (Eccentric or Concentric) may be used on concrete block structures. The Cone Tops shall be installed on a bed of mortar.

Eccentric Cone Tops may be used on all structures, and Concentric Cone Tops shall be used only on structures 5 feet or less in depth, unless otherwise directed by the Engineer.

Steps meeting the following requirements shall be installed in all structures over 5 feet in depth: 16 inch C-C maximum spacing; project a minimum clear distance of 4 inches from the wall at the point of embedment; minimum length of 10 inches; minimum wall embedment of 3 inches; and be capable of supporting a concentrated load of 300 lbs. Ferrous metal steps not painted or treated to resist corrosion shall have a minimum cross sectional dimension of 1 inch.

Solid Aluminum steps shall have a minimum cross sectional dimension of 0.75 inch. Aluminum surfaces to be embedded in concrete shall be given one coat of suitable quality paint, such as zinc chromate primer conforming to Federal Specification TT-P-645 or equivalent. Steps of approved Polyproplene plastic coated reinforcement bar will be acceptable.

All bar steel reinforcement shall be embedded 2 inches clear unless otherwise shown or noted.

Precast Reinforced Concrete Risers may be placed with tongue up or down.

All Precast Inlet Units shall conform to the pertinent requirements of AASHTO Designation M 199.

* Use 2'-0" diameter opening with Type "C", "L" and "J" covers, or 3'-0" diameter with Type "K" and "M" covers.

(1) 2 courses 6" block.

MANHOLES TYPE 1

State of Wisconsin
Department of Transportation

APPROVED 4-13-82
DATE

CHIEF DESIGN ENGINEER

S.D.D. 8 B 6-3

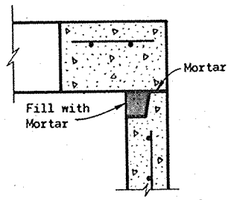

DETAIL "A"

*Selection of square or circular design will be based on the pipe sizes and the Inlet Cover being utilized.

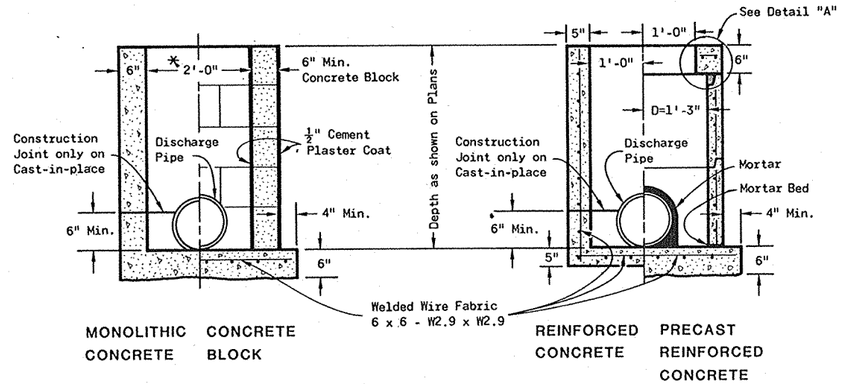

MONOLITHIC CONCRETE | CONCRETE BLOCK | REINFORCED CONCRETE | PRECAST REINFORCED CONCRETE

INLETS TYPE 1

GENERAL NOTES

Details of construction, materials and workmanship not shown on this drawing shall conform to the pertinent requirements of the Standard Specifications and the applicable Special Provisions.

Detailed drawings for proposed alternate designs for underground drainage structures shall be submitted to the Engineer for approval providing that such alternate designs make provision for equivalent capacity and strength.

All Precast Inlet units shall conform to the pertinent requirements of AASHTO Designation M 199.

All drainage structures are designated on the plans as "Manholes 1-C", "Catch Basins 1-B", "Inlets 3-H", etc. The first digit designates the masonry portion of the structure, and the following letter designates the type of cover to be used to comprise the complete unit.

Precast Reinforced Bases shall be placed on a bed of material at least 6 inches in depth, which meets the requirements for Granular Backfill. This bedding shall be compacted and provide uniform support for the entire area of the base.

Precast Reinforced Concrete Flat Slab Tops may be used on the structures. The Tops shall be installed on a bed of mortar.

All Bar Steel reinforcement shall be embedded 2 inches clear unless otherwise shown or noted.

Precast Reinforced Concrete Risers shall be placed with tongue down.

(1) Use 2'-6" opening for Type 2 Inlets and 3'-0" opening for Type 3 Inlets.

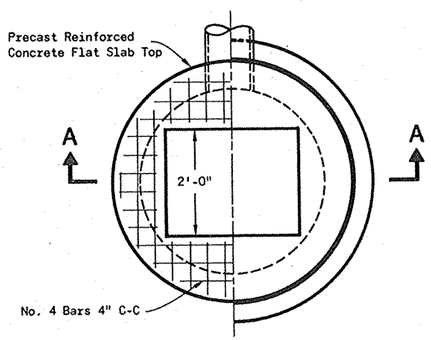

PLAN VIEW

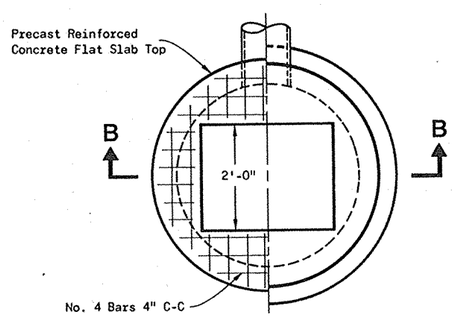

PLAN VIEW

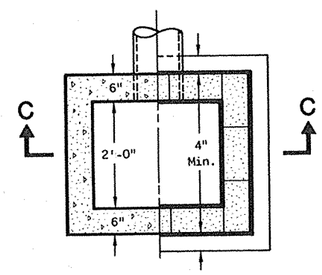

PLAN VIEW

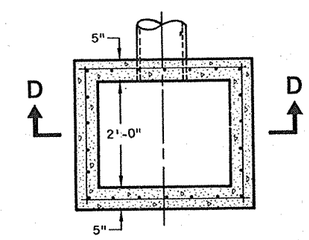

PLAN VIEW

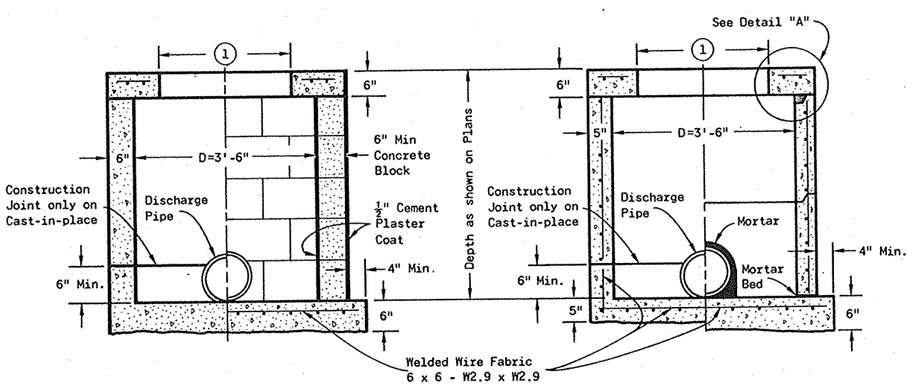

MONOLITHIC CONCRETE | CONCRETE BLOCK | REINFORCED CONCRETE | PRECAST REINFORCED CONCRETE

SECTION A–A | SECTION B–B

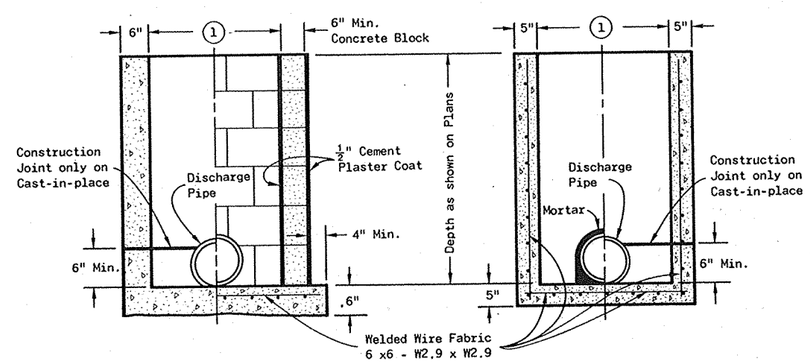

MONOLITHIC CONCRETE | CONCRETE BLOCK | PRECAST REINFORCED CONCRETE | REINFORCED CONCRETE

SECTION C–C | SECTION D–D

INLETS TYPE 2 & 3

INLETS TYPE 1, 2 & 3

State of Wisconsin
Department of Transportation

APPROVED 4-13-82 DATE
CHIEF DESIGN ENGINEER
FHWA

S.D.D. 8 C 1-4

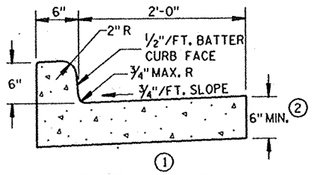

① TYPES A & D

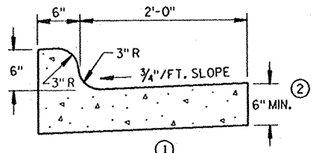

① TYPES K & L

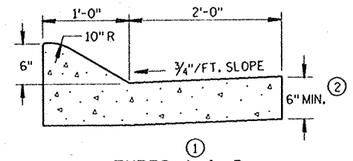

① TYPES A & D

CONCRETE CURB & GUTTER 36"

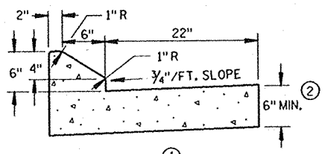

① TYPES G & J

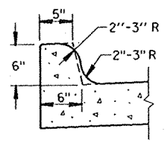

OPTIONAL CURB SHAPE FOR TYPES K ① & L

CONCRETE CURB & GUTTER 30"

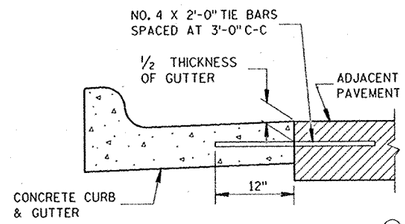

TYPICAL TIE BAR LOCATION ①

GENERAL NOTES

DETAILS OF CONSTRUCTION, MATERIALS AND WORKMANSHIP NOT SHOWN ON THIS DRAWING SHALL CONFORM TO THE PERTINENT REQUIREMENTS OF THE CONTRACT.

SEALANT IS NOT REQUIRED IN THE JOINTS OF CONCRETE CURB OR CONCRETE CURB & GUTTER EXCEPT AS REQUIRED FOR INTEGRAL GUTTER.

PAVEMENT TIES ARE REQUIRED, WHEN INCLUDED IN THE CONTRACT, WHERE CONCRETE CURB, CONCRETE CURB AND GUTTER OR CONCRETE PAVEMENT IS PLACED ADJACENT TO EXISTING CONCRETE.

PAVEMENT TIES AND TIE BARS SHALL BE EPOXY COATED IN CONFORMANCE WITH SUBSECTION 505.2.4 OF THE STANDARD SPECIFICATIONS.

INTEGRAL CURB & GUTTER SHALL CONFORM TO THE DETAILS SHOWN FOR CONCRETE CURB & GUTTER INCLUDING THE TRANSVERSE GUTTER SLOPE. TIE BARS AND A LONGITUDINAL CONSTRUCTION JOINT ARE NOT REQUIRED WITH THIS ALTERNATE.

PAVEMENT JOINTS SHALL BE EXTENDED THROUGH INTEGRAL CURB & GUTTER. JOINTS IN INTEGRAL GUTTER SHALL HAVE THE SAME DIMENSIONS AS THE JOINTS IN THE ADJACENT PAVEMENT. JOINTS IN INTEGRAL CURB SHALL BE 1/8" WIDE.

JOINTS IN INTEGRAL CURB & GUTTER SHALL BE SEALED TO THE FACE OF CURB WITH THE SAME SEALANT SPECIFIED FOR THE PAVEMENT JOINT. THE COST OF FURNISHING AND INSTALLING THIS SEALANT SHALL BE INCIDENTAL TO THE ITEM CONCRETE CURB & GUTTER.

UNLESS OTHERWISE SHOWN ON THE TYPICAL CROSS SECTIONS, THE BASE COURSE AND UNCLASSIFIED EXCAVATION LIMITS ARE TWO FEET BEHIND THE BACK OF CURBS.

① TIE BARS ARE REQUIRED FOR CURB AND GUTTER TYPES A, G AND K.

② THE BOTTOM OF CURB AND GUTTER MAY BE CONSTRUCTED EITHER LEVEL OR PARALLEL TO THE SLOPE OF THE SUBGRADE OR BASE COURSE PROVIDED A 6" MINIMUM GUTTER THICKNESS IS MAINTAINED.

③ WHEN REVERSE SLOPE GUTTER IS REQUIRED, THE LOCATIONS WILL BE SHOWN ELSEWHERE IN THE PLAN.

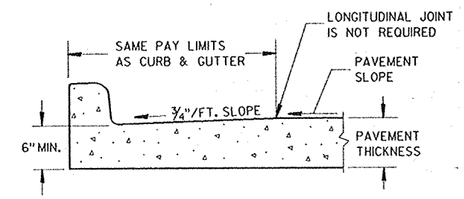

PARTIAL SECTION OF PAVEMENT WITH INTEGRAL CURB & GUTTER

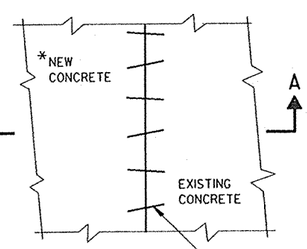

*NEW CURB & GUTTER, SURFACE DRAINS, CONCRETE PAVEMENT OR OTHER NEW CONCRETE.

PLAN VIEW

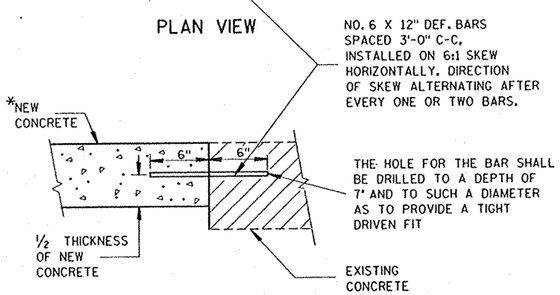

SECTION A-A
PAVEMENT TIES

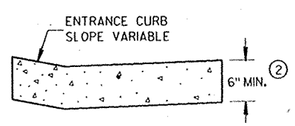

DRIVEWAY ENTRANCE CURB
(WHEN DIRECTED BY THE ENGINEER)

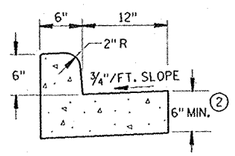

① TYPES A & D

CONCRETE CURB & GUTTER 18"

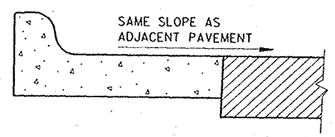

REVERSE SLOPE GUTTER ③
(TYPICAL FOR ALL CURB & GUTTER TYPES)

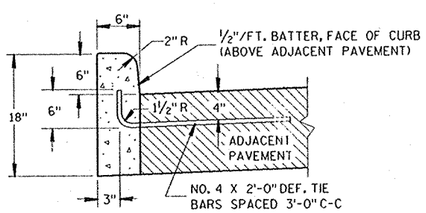

① TYPES A & D

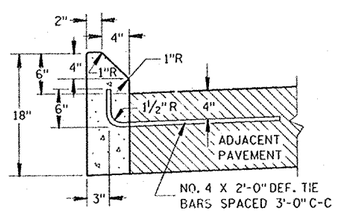

① TYPES G & J

CONCRETE CURB

CONCRETE CURB, CONCRETE CURB & GUTTER AND PAVEMENT TIES

STATE OF WISCONSIN
DEPARTMENT OF TRANSPORTATION

APPROVED
10-23-86
DATE
STATE DESIGN ENGINEER FOR HWYS
FHWA

S.D.D. 8 D 1-11

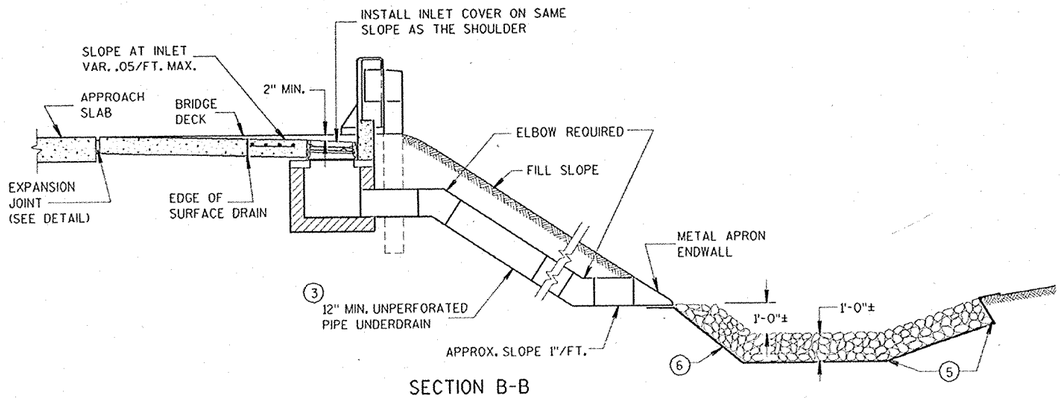

SECTION B-B

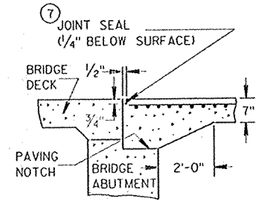

SECTION D-D

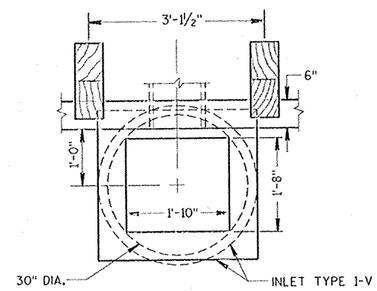

PLAN VIEW

GENERAL NOTES

DETAILS OF CONSTRUCTION, MATERIALS, AND WORKMANSHIP NOT SHOWN ON THIS DRAWING SHALL CONFORM TO THE PERTINENT REQUIREMENTS OF THE STANDARD SPECIFICATIONS AND APPLICABLE SPECIAL PROVISION.

① NO. 4 X 2'-0" TIE BARS SPACED AT 3'-0" CENTERS TO BE USED ONLY WHEN ADJACENT TO P.C. CONCRETE.

② NO. 4 X 2'-0" TIE BARS SPACED AT 12" CENTERS TO BE PLACED BY BRIDGE CONTRACTOR, OR PAVEMENT TIES PLACED AS DIRECTED BY THE ENGINEER.

③ THE PIPE UNDERDRAIN MAY BE ANY ONE OF THE SIX MATERIALS LISTED IN THE STANDARD SPECIFICATIONS SECTION 612.2 (EXCEPT SECTION 612.2.3 DRAIN TILE).

④ MINIMUM REINFORCEMENT SHALL BE 6" X 6" - W4.0 X W4.0 OR NO. 3 BARS LONGITUDINAL AND TRANSVERSE SPACING 12" C-C.

⑤ LIMITS OF ADDITIONAL RIPRAP WHEN SPECIAL DITCH IS REQUIRED.

⑥ GEOTEXTILE FABRIC, TYPE 'R'

⑦ HOT POURED SEALANT UNLESS OTHERWISE SPECIFIED.

⑧ THIS DIMENSION MAY VARY DEPENDING ON THE SPACING OF POSTS FOR THE STEEL PLATE BEAM GUARD. THE TYPICAL LOCATION FOR THE SURFACE DRAIN IS WHERE THE POST SPACING WIDENS TO 3'-1 1/2".

⑨ SEE CURRENT STANDARD DETAIL DRAWINGS 8A5 AND 8C1 FOR DETAILS.

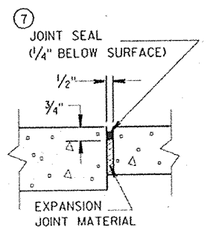

EXPANSION JOINT DETAIL

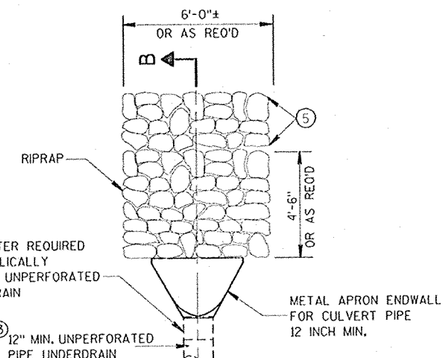

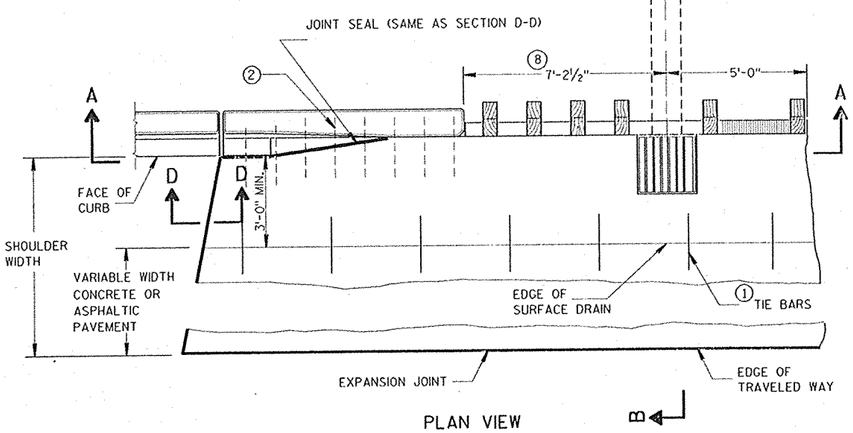

PLAN VIEW

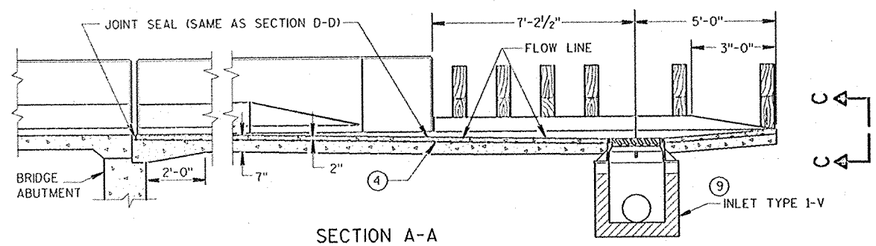

SECTION A-A

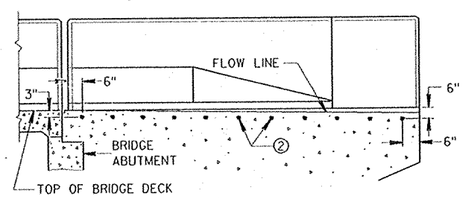

LOCATION OF TIE BARS IN WINGWALL

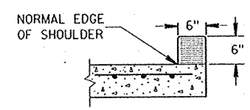

SECTION C-C

CONCRETE SURFACE DRAIN
DROP INLET TYPE
AT STRUCTURES

STATE OF WISCONSIN
DEPARTMENT OF TRANSPORTATION

APPROVED 7/2/90 DATE — STATE DESIGN ENGINEER FOR HWYS

FHWA

S.D.D. 8 D 3-4

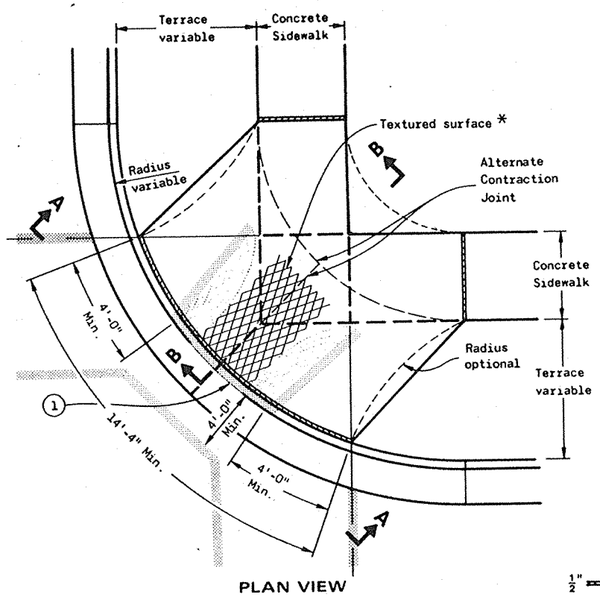

PLAN VIEW

TYPE 1 RAMP

(CENTER OF CORNER RADIUS)

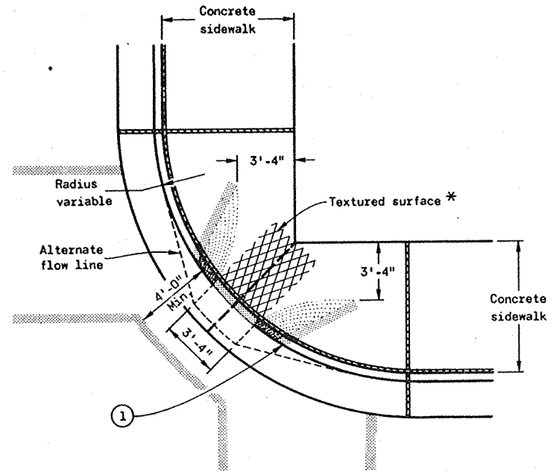

PLAN VIEW

TYPE 1-A RAMP

(NO TERRACE)

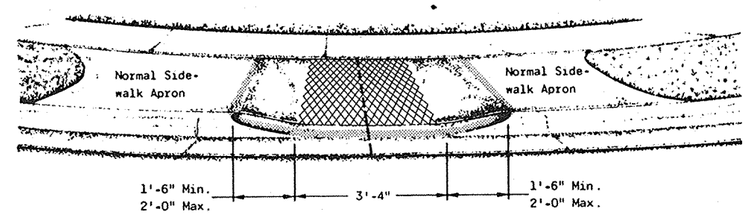

VIEW **A-A**

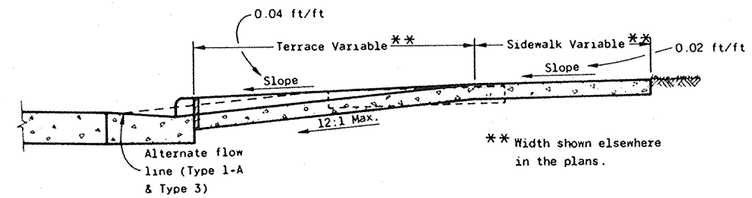

SECTION **B-B**

$\frac{1}{2}$" EXPANSION JOINTS - SIDEWALK

CONTRACTION JOINTS

Location of joints may be varied from those shown to better fit site conditions and/or local government preference.

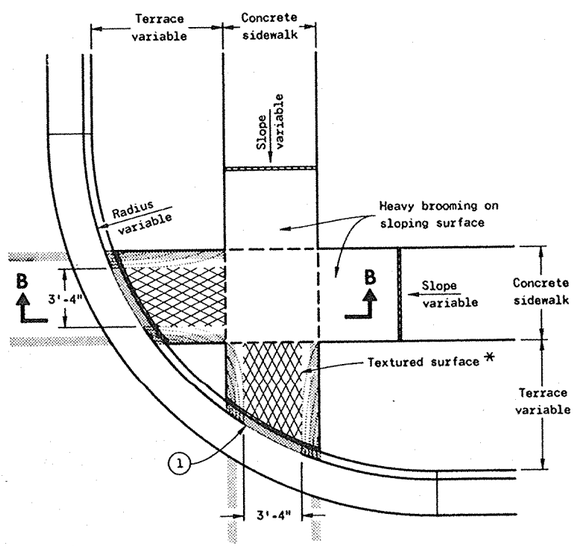

PLAN VIEW

TYPE 2 RAMP

(ON LINE WITH SIDEWALK)

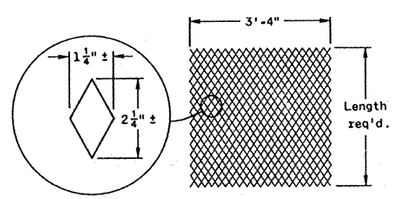

DETAIL OF DIAMOND PATTERN * .

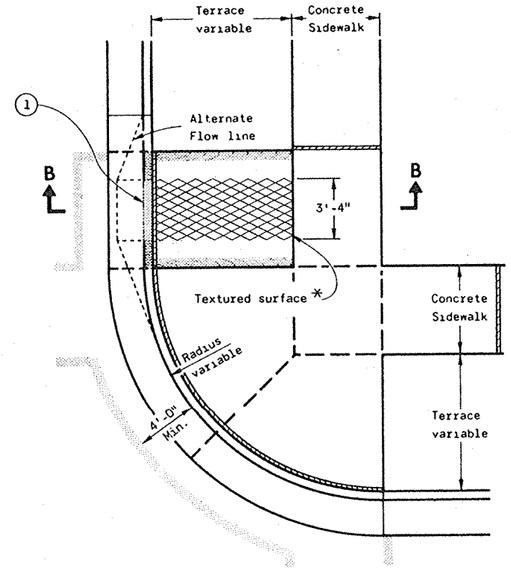

PLAN VIEW

TYPE 3 RAMP

(OUTSIDE OF CROSSWALK AREA)

GENERAL NOTES

Details of construction, materials and workmanship not shown on this drawing shall conform to the pertinent requirements of the Standard Specifications and the applicable Special Provisions.

Ramps shall be built at 12:1 or flatter. When necessary, the sidewalk elevation may be lowered to meet the high point on the ramp.

Type 1 or Type 1-A Ramps shall have a normal sidewalk apron and curb on both sides of ramp

Curb ramps shall be measured and paid for as Concrete Sidewalk and Concrete Curb and Gutter.

Surface texturing shall consist of linear impressions approximately $\frac{1}{4}$ inch to $\frac{3}{8}$ inch in depth and width, oriented to provide a uniform pattern of diamond shapes measuring approximately $1\frac{1}{4}$ inches in width by $2\frac{1}{4}$ inches in length, with the length being parallel to the direction of pedestrian movement. This surface texture may be achieved by impressing and removing a piece of expanded metal regular industrial mesh into the surface of the ramp while the concrete is in a plastic state

(1) The ramp shall be bordered on both sides and on the curb line with a 4 inch wide yellow stripe or with brick of a contrasting color. Normally the paint stripe alternate will be used. The municapality or the department will apply this striping unless otherwise specified in the contract.

If a municapality requires the brick alternate, special details and provisions are shown elsewhere in the plans.

CURB RAMPS

State of Wisconsin
Department of Transportation

APPROVED 10-23-84 DATE

D. J. Ahmad CHIEF DESIGN ENGINEER

FHWA

S.D.D. 8 D 5-8

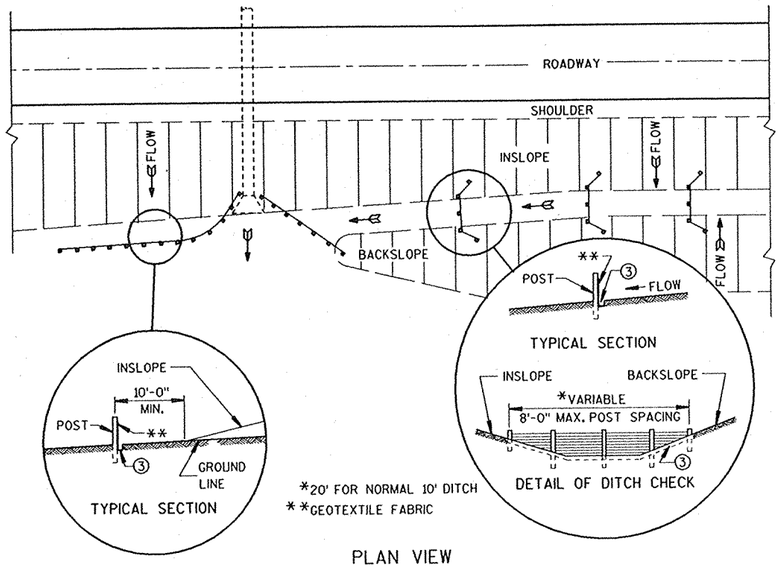

PLAN VIEW

TYPICAL APPLICATIONS OF SILT FENCE

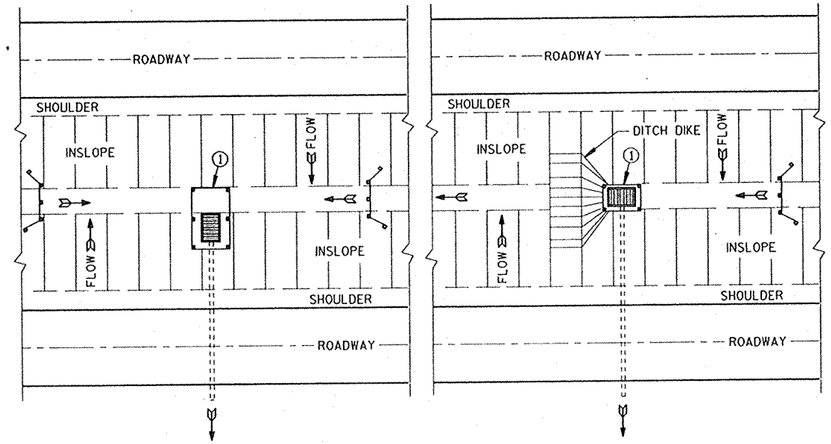

SITUATION 1

SITUATION 2

PLAN VIEW

SILT FENCE AT MEDIAN SURFACE DRAINS

GENERAL NOTES

DETAIL OF CONSTRUCTION NOT SHOWN ON THIS DRAWING SHALL CONFORM TO THE PERTINENT REQUIREMENTS OF THE STANDARD SPECIFICATIONS AND APPLICABLE SPECIAL PROVISIONS.

WHEN POSSIBLE THE SILT FENCE SHOULD BE CONSTRUCTED IN AN ARC OR HORSESHOE SHAPE, WITH THE ENDS POINTING UPSLOPE TO MAXIMIZE BOTH STRENGTH AND EFFECTIVENESS.

① CROSS BRACE WITH 2" X 4" WOODEN FRAME OR EQUIVALENT AT TOP OF POSTS AS DIRECTED BY THE ENGINEER.

② MINIMUM 14 GAGE WIRE REQUIRED, FOLD FABRIC 3" OVER THE WIRE AND STAPLE OR PLACE WIRE RINGS ON 12" C-C.

③ EXCAVATE A TRENCH A MINIMUM OF 4" WIDE & 6" DEEP TO BURY AND ANCHOR THE GEOTEXTILE FABRIC. FOLD MATERIAL TO FIT TRENCH AND BACKFILL & COMPACT TRENCH WITH EXCAVATED SOIL.

④ WIRE SUPPORT FENCE SHALL BE 14 GAGE MINIMUM WOVEN WIRE WITH A MAXIMUM MESH SPACING OF 6". SECURE TOP OF GEOTEXTILE FABRIC TO TOP OF FENCE WITH STAPLES OR WIRE RINGS AT 12" C-C.

⑤ GEOTEXTILE FABRIC SHALL BE REINFORCED WITH AN INDUSTRIAL POLYPROPYLENE NETTING WITH A MAXIMUM MESH SPACING OF 3/4" OR EQUAL. A HEAVY DUTY NYLON TOP SUPPORT CORD OR EQUIVALENT IS REQUIRED.

⑥ STEEL POSTS SHALL BE STUDDED "TEE" OR "U" TYPE WITH A MINIMUM WEIGHT OF 1.28 LBS/LINEAL FOOT (WITHOUT ANCHOR). FIN ANCHORS SUFFICIENT TO RESIST POST MOVEMENT ARE REQUIRED. WOOD POSTS SHALL BE A MINIMUM SIZE OF 4" DIA. OR 1 1/2" X 3 1/2" EXCEPT WOOD POSTS FOR GEOTEXTILE FABRIC REINFORCED WITH NETTING SHALL BE A MINIMUM SIZE OF 1 1/8" X 1 1/8" OAK OR HICKORY.

ALTERNATES A & B ARE EQUAL AND EITHER MAY BE USED.

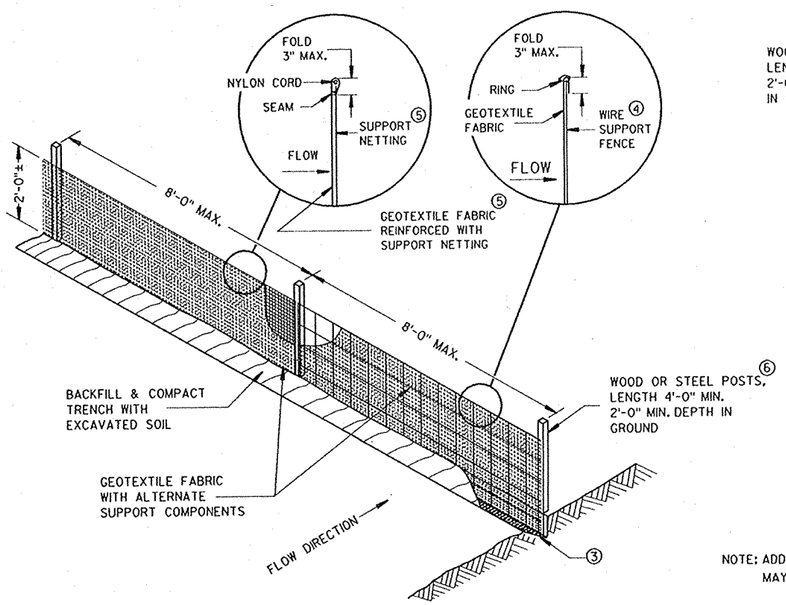

ALTERNATE "A"

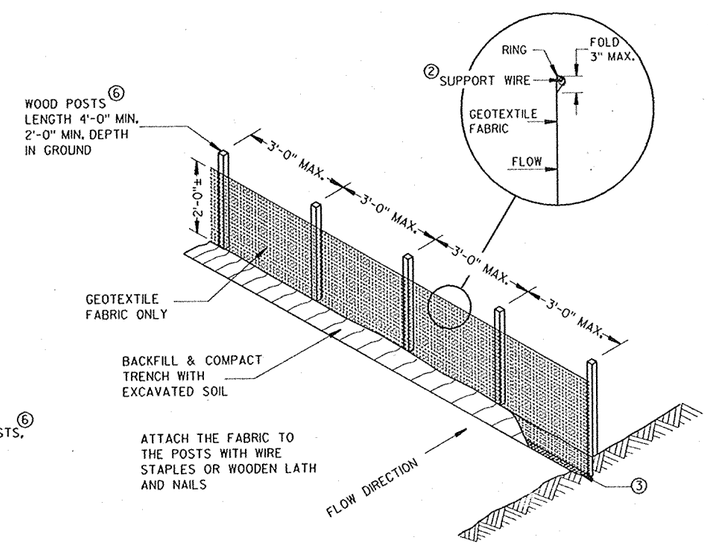

ALTERNATE "B"

NOTE: ADDITIONAL POST DEPTH OR TIE BACKS MAY BE REQUIRED IN UNSTABLE SOILS

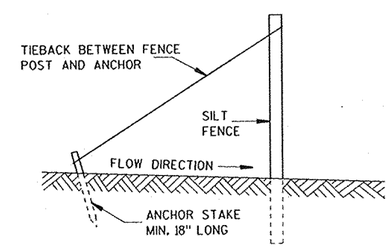

SILT FENCE TIE BACK

(WHEN REQUIRED BY THE ENGINEER)

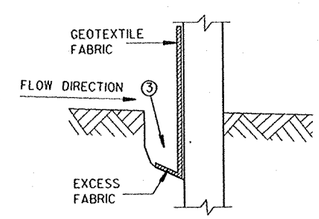

TRENCH DETAIL

SILT FENCE

STATE OF WISCONSIN
DEPARTMENT OF TRANSPORTATION

APPROVED 8-31-88 DATE

STATE DESIGN ENGINEER FOR HWYS

FHWA

S.D.D. 8 E 9-3

METAL APRON ENDWALLS

PIPE DIA. (IN.)	MIN. THICK. (Inches) STEEL	MIN. THICK. (Inches) ALUM.	DIMENSIONS (Inches) A (±1")	B (MAX.)	H (±1")	L (±1 1/2")	L1 ①	L2 ①	W (±2")	APPROX. SLOPE	BODY
12	.064	.060	6	6	6	21	12	17 1/2	24	2 1/2 to 1	1 Pc.
15	.064	.060	7	8	6	26	14	21 3/4	30	2 1/2 to 1	1 Pc.
18	.064	.060	8	10	6	31	15	28 1/4	36	2 1/2 to 1	1 Pc.
21	.064	.060	9	12	6	36	18	29 5/8	42	2 1/2 to 1	1 Pc.
24	.079	.075	10	13	6	41	18	37 1/4	48	2 1/2 to 1	1 Pc.
30	.079	.075	12	16	8	51	18	52 1/4	60	2 1/2 to 1	1 Pc.
36	.109	.105	14	19	9	60	24	59 3/4	72	2 1/2 to 1	2 Pc.
42	.109	.105	16	22	11	69	24	75 5/8	84	2 1/2 to 1	2 Pc.
48	.109	.105	18	27	12	78	24	81	90	2 1/4 to 1	3 Pc.
54	.109	.105	18	30	12	84	30	85 1/2	102	2 1/4 to 1	3 Pc.
60	.109×	.105×	18	33	12	87	—	—	114	2 to 1	3 Pc.
66	.109×	.105×	18	36	12	87	—	—	120	2 to 1	3 Pc.
72	.109×	.105×	18	39	12	87	—	—	126	2 to 1	3 Pc.
78	.109×	.105×	18	42	12	87	—	—	132	1 1/2 to 1	3 Pc.
84	.109×	.105×	18	45	12	87	—	—	138	1 1/2 to 1	3 Pc.
90	.109×	.105×	18	37	12	87	—	—	144	1 1/2 to 1	3 Pc.
96	.109×	.105×	18	35	12	87	—	—	150	1 1/2 to 1	3 Pc.

× EXCEPT CENTER PANEL SEE GENERAL NOTES

REINFORCED CONCRETE APRON ENDWALLS

PIPE DIA. (IN.)	DIMENSIONS (Inches) T	A	B	C	D	E	G	APPROX. SLOPE
12	2	4	24	48 7/8	72 7/8	24	2	3 to 1
15	2 1/4	6	27	46	73	30	2 1/4	3 to 1
18	2 1/2	9	27	46	73	36	2 1/2	3 to 1
21	2 3/4	9	36	37 1/2	73 1/2	42	2 3/4	3 to 1
24	3	9 1/2	43 1/2	30	73 1/2	48	3	3 to 1
27	3 1/4	10 1/2	49 1/2	24	73 1/2	54	3 1/4	3 to 1
30	3 1/2	12	54	19 3/4	73 1/2	60	3 1/2	3 to 1
36	4	15	63	34 3/4	97 3/4	72	4	3 to 1
42	4 1/2	21	63	35	98	78	4 1/2	3 to 1
48	5	24	72	26	98	84	5	3 to 1
54	5 1/2	27	65	* 33 1/4-35 **	* 98 1/4- 100 **	90	5 1/2	2 2/5 to 1
60	6	* 30-35 **	60	39	99	96	5	2 to 1
66	6 1/2	* 24-30 **	* 72-78 **	* 21-27 **	99	102	5 1/2	2 to 1
72	7	* 24-36 **	78	21	99	108	6	2 to 1
78	7 1/2	* 24-36 **	78	21	99	114	6 1/2	2 to 1
84	8	36	90 1/2	21	111 1/2	120	6 1/2	1 1/2 to 1
90	8 1/2	41	87 1/2	24	111 1/2	132	6 1/2	1 1/2 to 1

* MINIMUM
** MAXIMUM

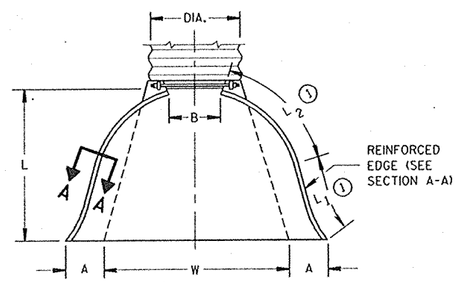

PLAN VIEW

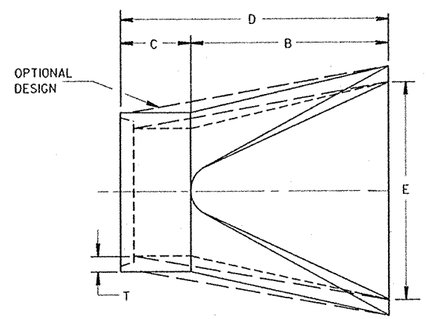

PLAN

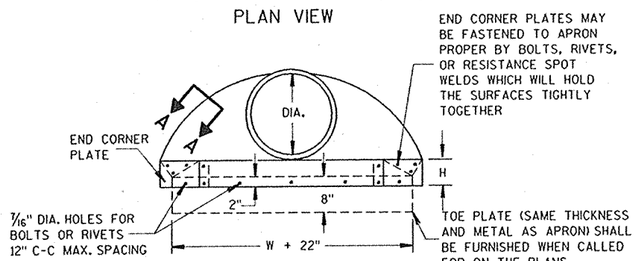

END VIEW

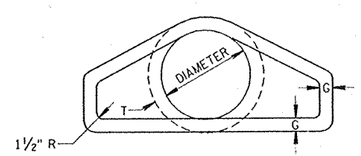

END VIEW

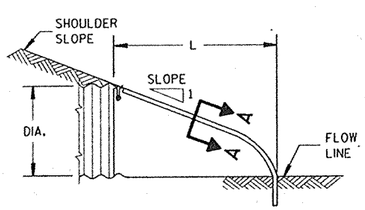

SIDE ELEVATION

METAL ENDWALLS

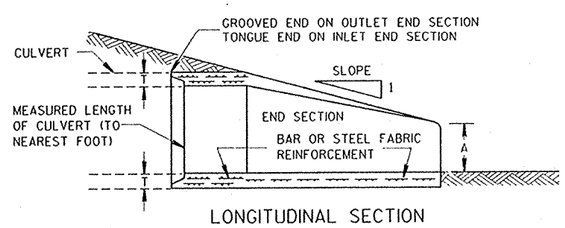

LONGITUDINAL SECTION

CONCRETE ENDWALLS

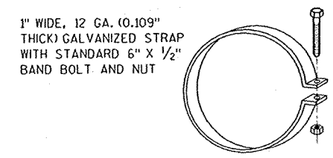

ALTERNATE FOR TYPE 1 CONNECTION

END SECTION CONNECTOR STRAP

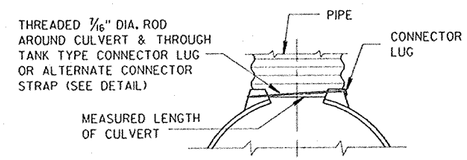

TYPE 1
FOR 12" THRU 24" CORR. PIPE

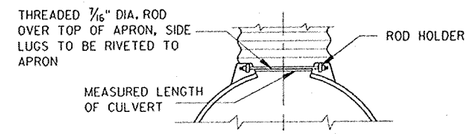

TYPE 2
FOR 30" THRU 96" CORR. PIPE

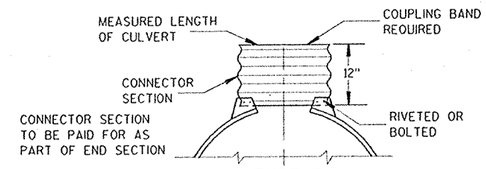

TYPE 3
FOR 42" THRU 96" CORR. PIPE

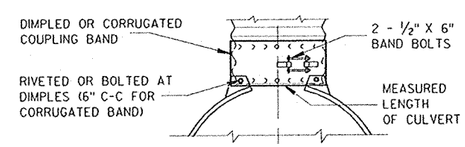

TYPE 5
ALTERNATE FOR:
ALL SIZES CORRUGATED CIRCULAR PIPE

NOTE: DIMPLED BAND FITS OVER OUTSIDE OF ENDWALL, AND CORRUGATED BAND FITS INSIDE ENDWALL. DIMPLED BAND MAY BE USED WITH HELICALLY CORRUGATED PIPE.

FOR CIRCUMFERENTIALLY CORRUGATED PIPE USE ENDWALL CONNECTION DETAILS 1, 2, 3 OR 5 AS APPLICABLE.

FOR HELICALLY CORRUGATED PIPE USE ENDWALL CONNECTION DETAILS 1, 2 OR 5.

FOR HELICALLY CORRUGATED PIPES WITH TWO CIRCUMFERENTIAL CORRUGATIONS AT EACH END USE ENDWALL CONNECTION DETAILS 1, 2 OR 3.

CONNECTION DETAILS

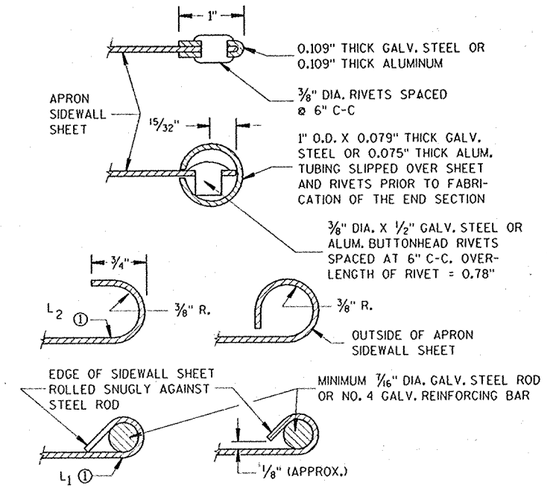

SECTION A-A

GENERAL NOTES

DETAILS OF CONSTRUCTION, MATERIALS AND WORKMANSHIP NOT SHOWN ON THIS DRAWING SHALL CONFORM TO THE PERTINENT REQUIREMENTS OF THE STANDARD SPECIFICATIONS AND THE APPLICABLE SPECIAL PROVISIONS.

CONCRETE CULVERT ENDWALLS MAY NOT BE USED WITH GALVANIZED STEEL OR ALUMINUM CULVERT PIPE OR VISE VERSA. GALVANIZED STEEL OR ALUMINUM ENDWALLS SHALL NORMALLY BE INSTALLED ON CULVERT PIPE OF THE SAME METAL.

ALL THREE PIECE STEEL APRON ENDWALLS FOR 60" DIAMETER PIPE AND LARGER SHALL HAVE 0.109" SIDES AND 0.138" CENTER PANELS. ALL THREE PIECE ALUMINUM APRON ENDWALLS FOR 60" DIAMETER PIPE AND LARGER SHALL HAVE 0.105" SIDES AND 0.134" CENTER PANELS. THE WIDTH OF CENTER PANELS SHALL BE GREATER THAN 20 PERCENT OF THE PIPE PERIMETER.

LAP SEAMS SHALL BE TIGHTLY JOINED BY GALVANIZED RIVETS OR BOLTS FOR STEEL UNITS AND ALUMINUM RIVETS AND BOLTS FOR ALUMINUM UNITS. FOR THE 60" THROUGH 96" DIAMETER APRON ENDWALL SIZES, THE REINFORCED EDGES AND CENTER PANEL SEAMS SHALL BE FURTHER REINFORCED WITH GALVANIZED STEEL OR ALUMINUM STIFFENER ANGLES. THE ANGLES SHALL BE ATTACHED BY GALVANIZED NUTS AND BOLTS FOR STEEL UNITS AND ALUMINUM NUTS AND BOLTS FOR ALUMINUM UNITS.

WHERE TWO OR MORE PIPES WITH APRON ENDWALLS ARE LAID ADJACENT TO EACH OTHER, THEY SHALL BE SEPARATED BY A DISTANCE SUFFICIENT TO PROVIDE A MINIMUM CLEARANCE OF 6 INCHES BETWEEN APRON ENDWALLS.

① FOR PIPE SIZES UP TO 60" DIAMETER, A 180° ROLLED EDGE MAY BE USED INSTEAD OF STEEL ROD REINFORCEMENT. SEE SECTION A-A.

APRON ENDWALLS FOR CULVERT PIPE

STATE OF WISCONSIN
DEPARTMENT OF TRANSPORTATION

APPROVED 12/17/87 DATE — STATE DESIGN ENGINEER FOR HWYS

FHWA

S.D.D. 8 F 1-10a

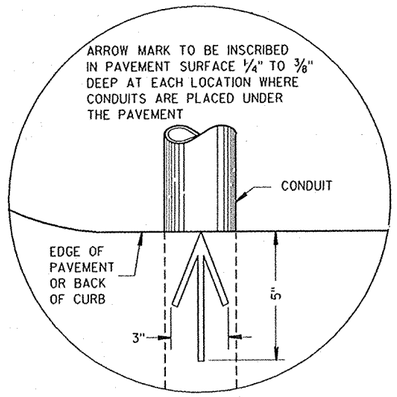

PLAN VIEW

ARROW MARK

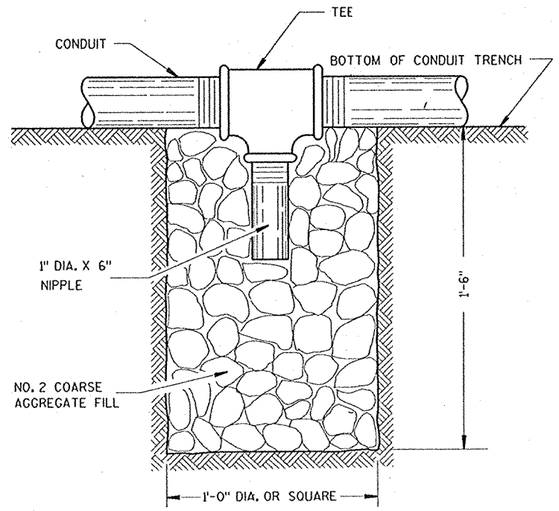

NOTE: INSTALL AT LOCATIONS WHERE CONDUITS CANNOT BE PITCHED TO DRAIN INTO A PULL BOX.

DRAIN SUMP FOR CONDUIT

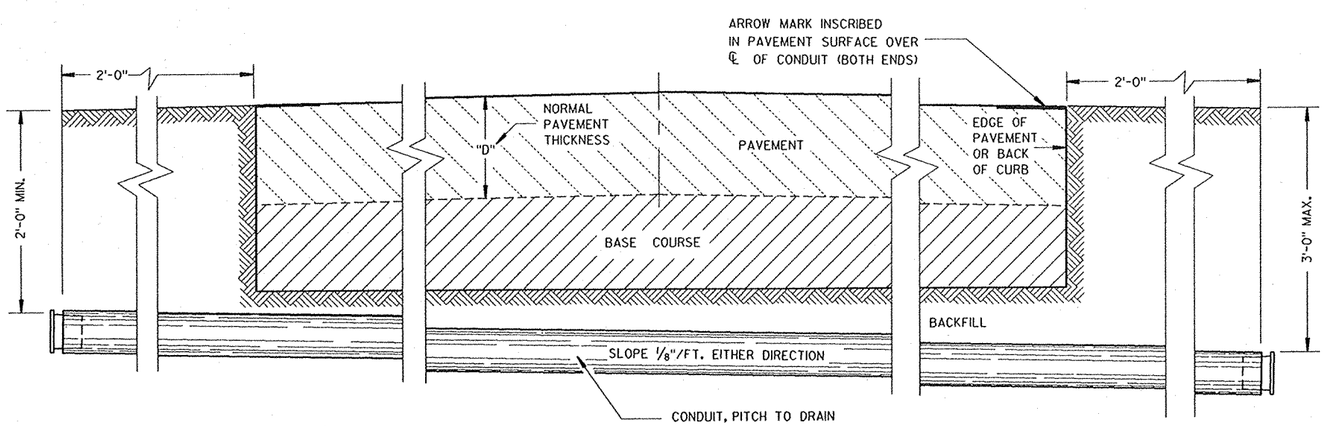

SIDE ELEVATION

DETAIL FOR CONDUIT UNDER PAVED HIGHWAYS

GENERAL NOTES

DETAILS OF CONSTRUCTION, MATERIALS AND WORKMANSHIP NOT SHOWN ON THIS DRAWING SHALL CONFORM TO THE PERTINENT REQUIREMENTS OF THE CONTRACT.

METALLIC (STANDARD SPECIFICATION 613) OR NONMETALLIC (STANDARD SPECIFICATION 613) CONDUIT SHALL BE FURNISHED AND PLACED AS SHOWN.

DEPTH OF CONDUIT INSTALLED BELOW THE TRAVELED WAY SHALL BE 24 INCHES MINIMUM AND 36 INCHES MAXIMUM.

DEPTH OF CONDUIT INSTALLED THAT IS NOT BELOW THE TRAVELED WAY SHALL BE 18 INCHES MINIMUM AND 36 INCHES MAXIMUM.

ANY EXCEPTION TO THE MAXIMUM DEPTH SHALL BE ONLY WITH THE WRITTEN APPROVAL OF THE ENGINEER.

THE TRENCH SHALL NOT BE BACKFILLED PRIOR TO INSPECTION OF THE CONDUIT.

ALL METALLIC CONDUIT RACEWAY ENDS SHALL BE REAMED AND THREADED.

ALL METALLIC CONDUIT IN WHICH WIRE OR CABLE IS TO BE INSTALLED SHALL BE BUSHED WITH APPROVED THREADED BUSHINGS BEFORE INSTALLATION OF THE WIRE OR CABLE.

ALL METALLIC CONDUITS IN WHICH WIRE OR CABLE IS NOT TO BE INSTALLED SHALL BE CAPPED WITH THREADED PROTECTIVE CAPS, AS APPROVED BY THE ENGINEER.

ALL NONMETALLIC CONDUIT SHALL BE CAPPED OR PLUGGED IMMEDIATELY AFTER INSTALLATION.

NONMETALLIC CONDUITS IN WHICH WIRE OR CABLE IS NOT BEING INSTALLED SHALL REMAIN CAPPED OR PLUGGED.

WHEN REQUIRED TO CONNECT NONMETALLIC CONDUIT TO METALLIC CONDUIT, ONLY U.L. LISTED ADAPTER FITTINGS SHALL BE USED.

PRIOR TO CONDUIT ACCEPTANCE, CONDUIT CAPS OR PLUGS SHALL BE REMOVED, AND THE CAPS, PLUGS AND CONDUIT ENDS SHALL BE THOROUGHLY CLEANED AND THEN THE CAPS OR PLUGS REINSTALLED TO ASSURE THAT THE CAPS OR PLUGS CAN BE EASILY REMOVED IN THE FUTURE.

ALL CONDUIT BEING FURNISHED AND INSTALLED SHALL HAVE THE U.L. LABEL FIRMLY ATTACHED.

CONDUIT RUNS SHALL BE THE SAME SIZE PIPE FROM ONE END TO THE OTHER (FROM PULL BOX TO PULL BOX-OR-JUNCTION BOX TO JUNCTION BOX).

A #12 GAUGE, GALVANIZED PULL WIRE SHALL BE INSTALLED IN EACH RUN OF CONDUIT THAT DOES NOT RECEIVE CABLE OR WIRE UNDER THIS CONTRACT. THE PULL WIRE SHALL BE DOUBLED BACK 2 FEET AT EACH END CAP OF THE CONDUIT RUN.

CONDUIT

STATE OF WISCONSIN
DEPARTMENT OF TRANSPORTATION

APPROVED
1-29-88
DATE
STATE TRAFFIC ENGINEER FOR HWYS
FHWA

S.D.D. 9 B 2-4

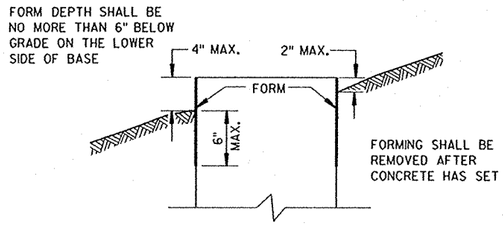

FORMING DETAIL

QUANTITY REQUIREMENTS	CONCRETE BASE TYPE		
	1	2	5
APPROX. CUBIC YARDS OF CONCRETE	.32	.57	.40
LBS. OF HOOP BAR STEEL	NONE	23	16
LBS. OF VERTICAL BAR STEEL	NONE	60	18

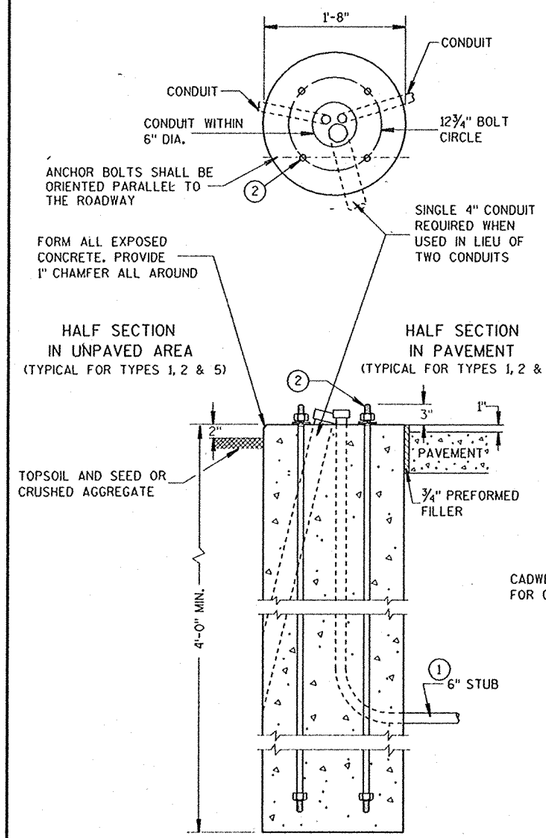

TYPE 1

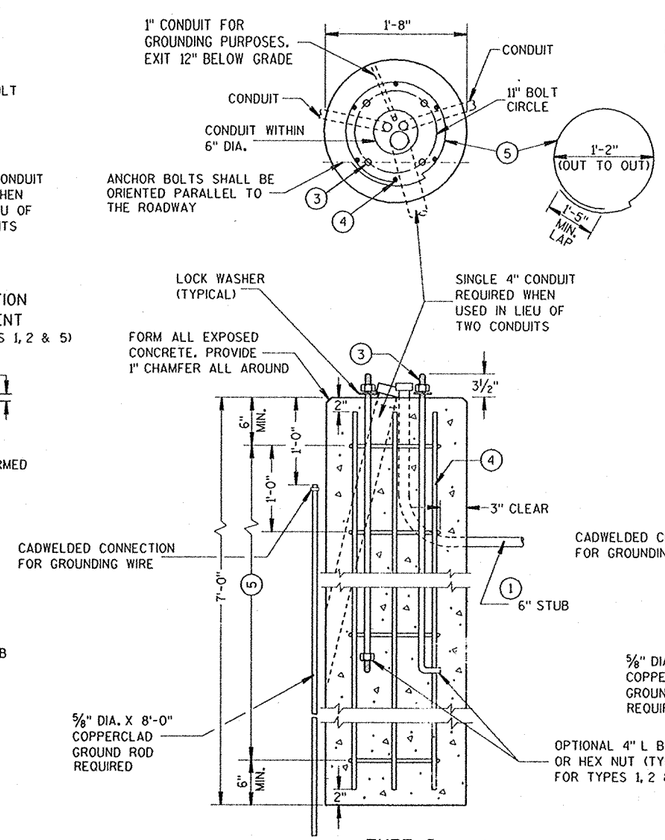

TYPE 2

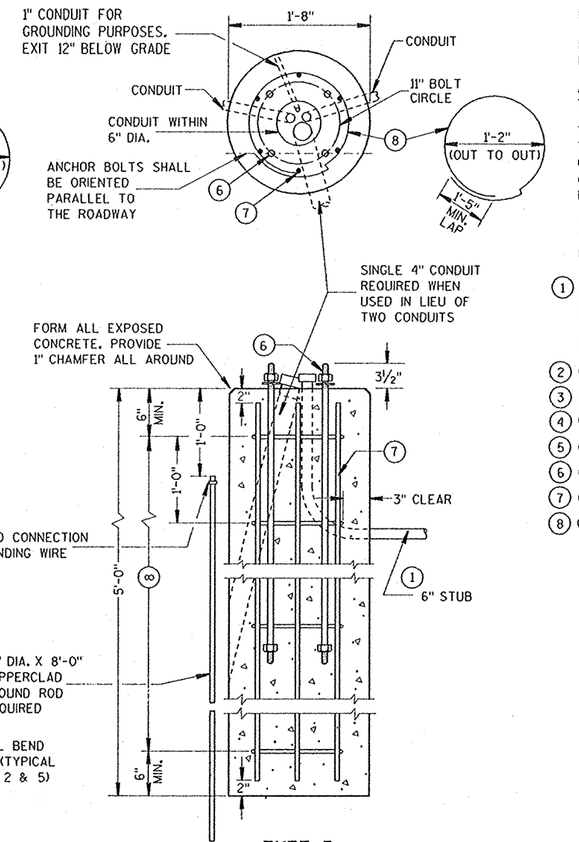

TYPE 5

CONCRETE BASES

GENERAL NOTES

DETAILS OF CONSTRUCTION, MATERIALS AND WORKMANSHIP NOT SHOWN ON THIS DRAWING SHALL CONFORM TO THE PERTINENT REQUIREMENTS OF THE CONTRACT.

TOP SURFACES OF CONCRETE BASES SHALL BE TROWEL FINISHED AND LEVEL.

MINIMUM BENDING RADIUS OF CONDUIT = 6 X THE DIAMETER.

CONDUIT HEIGHT ABOVE CONCRETE BASES SHALL BE 1 INCH. ALL METALLIC CONDUIT ENDS SHALL BE REAMED AND THREADED.

ALL METALLIC CONDUITS IN WHICH WIRE OR CABLE IS NOT TO BE INSTALLED SHALL BE CAPPED.

ALL NONMETALLIC CONDUITS IN WHICH WIRE OR CABLE IS NOT INSTALLED SHALL BE PLUGGED.

ALL CONDUIT ENDS AT THE TOP OF CONCRETE BASES SHALL BE CAPPED IF METALLIC OR PLUGGED IF NONMETALLIC IMMEDIATELY AFTER PLACEMENT AND BEFORE CONCRETE IS POURED. CONDUITS IN WHICH WIRE OR CABLE IS NOT INSTALLED SHALL REMAIN CAPPED OR PLUGGED.

ENDS OF CONDUIT INSTALLED BELOW GRADE FOR FUTURE USE SHALL BE CAPPED IF METALLIC OR PLUGGED IF NONMETALLIC.

WHEN REQUIRED TO CONNECT NONMETALLIC CONDUIT TO METALLIC CONDUIT, ONLY ADAPTER FITTINGS, U.L. LISTED FOR ELECTRICAL USE, SHALL BE USED.

IF A BASE REQUIRES A DEEP FORM BECAUSE OF LOOSE DIRT OR FILL, THE FORM SHALL BE REMOVED BEFORE BACKFILLING AROUND THE BASE. BACKFILL SHALL BE TAMPED TIGHT AGAINST THE BARE CONCRETE BASE IN LAYERS OF 1 FOOT OR LESS..

A NO. 6 AWG, STRANDED COPPER GROUNDING WIRE SHALL BE CADWELDED TO THE GROUND ROD FOR TYPE 2 AND TYPE 5 BASES.

THE GROUNDING WIRE SHALL BE FURNISHED AND INSTALLED TO ENTER THE BASE OF THE TYPE 2 AND TYPE 5 BASES THROUGH A 1 INCH CONDUIT INSTALLED FOR GROUNDING PURPOSES, LEAVING A 4 FOOT COIL OF WIRE ABOVE THE CONCRETE BASE. THE GROUNDING WIRE SHALL BE NEATLY COILED AND THE COILS TIED TOGETHER.

WHEN ANCHOR BOLTS USING THE ALTERNATE "L" BEND ARE FURNISHED, THE 4" "L" BEND SHALL BE IN ADDITION TO THE SPECIFIED ANCHOR BOLT BAR LENGTH.

1. THE MINIMUM DEPTH OF CONDUIT EXITING THE CONCRETE BASE AND INSTALLED BELOW THE TRAVELED WAY SHALL BE 24 INCHES. THE MINIMUM DEPTH OF CONDUIT EXITING THE CONCRETE BASE THAT IS NOT INSTALLED BELOW THE TRAVELED WAY SHALL BE 18 INCHES. THE MAXIMUM DEPTH OF ALL CONDUIT SHALL BE 36 INCHES EXCEPT WITH WRITTEN APPROVAL BY THE ENGINEER.
2. (4) 1" DIA. X 3'-6" ANCHOR BOLTS.
3. (4) 1" DIA. X 5'-0" ANCHOR BOLTS.
4. (6) NO. 6 X 6'-8" BAR STEEL REINFORCEMENT.
5. (7) NO. 4 X 5'-1" BAR STEEL REINFORCEMENT @ 1'-0" C-C.
6. (4) 1" DIA. X 3'-6" ANCHOR BOLTS.
7. (6) NO.4 X 4'-8" BAR STEEL REINFORCEMENT
8. (5) NO. 4 X 5'-1" BAR STEEL REINFORCEMENT @ 1'-0" C-C.

CONCRETE BASES

STATE OF WISCONSIN
DEPARTMENT OF TRANSPORTATION

APPROVED
1-29-88
DATE
STATE TRAFFIC ENGINEER FOR HWYS
FHWA

S.D.D. 9 B 3-5

GENERAL NOTES

DETAILS OF CONSTRUCTION, MATERIALS AND WORKMANSHIP NOT SHOWN ON THIS DRAWING SHALL CONFORM TO THE PERTINENT REQUIREMENTS OF THE CONTRACT.

FOUR (4) BOLTS TO BE FURNISHED WITH EACH TRANSFORMER BASE. BOLTS SHALL BE 1" DIAMETER, 4" IN LENGTH, WITH WASHERS, LOCK WASHERS AND NUTS. BOLTS, NUTS AND WASHERS SHALL BE GALVANIZED IN ACCORDANCE WITH ASTM A-153, CLASS C.

LEVELING SHIMS, IF NEEDED, SHALL BE DESIGNED FOR THE PURPOSE AND USED UNDER CAST BASES WHEN PLUMBING POLES OR STANDARDS DURING INSTALLATION. THE USE OF WASHERS IN LIEU OF PROPER LEVELING SHIMS IS NOT ACCEPTABLE.

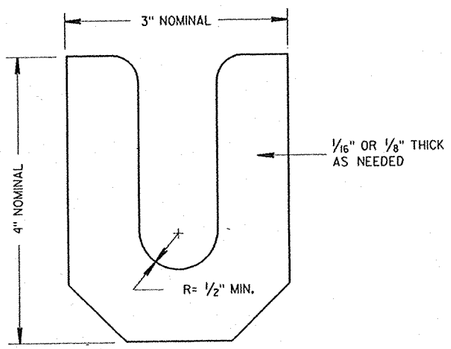

LEVELING SHIM

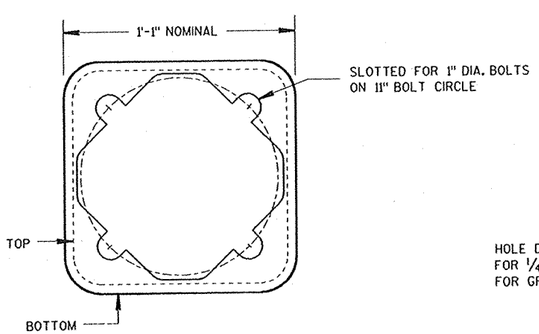

BOTTOM VIEW
(TRANSFORMER BASE)

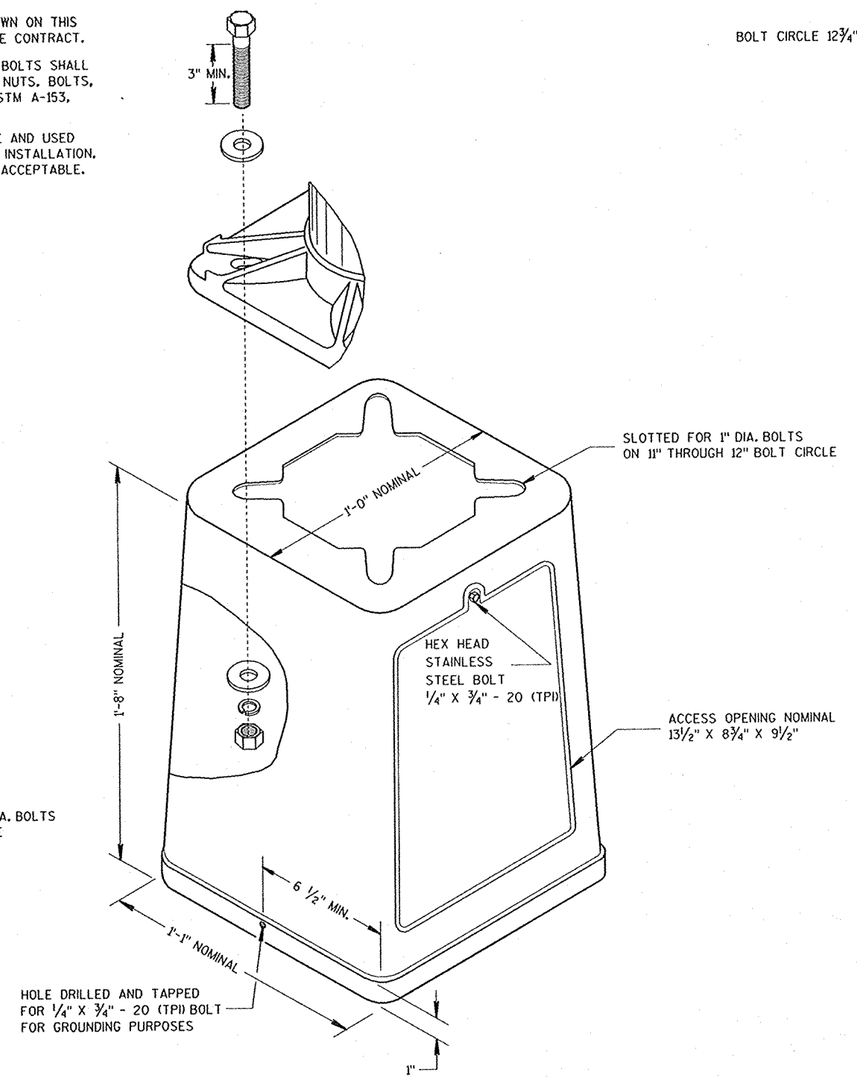

ISOMETRIC VIEW

TRANSFORMER BASE

INTENDED FOR USE WITH TYPE 2, 3, 4 & 5 POLES

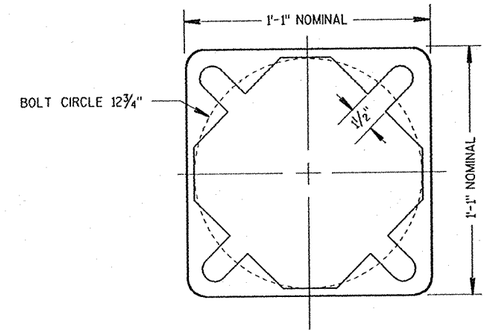

BOTTOM VIEW
(PEDESTAL BASE)

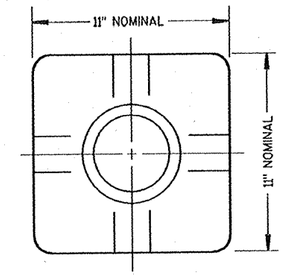

TOP VIEW
(PEDESTAL BASE)

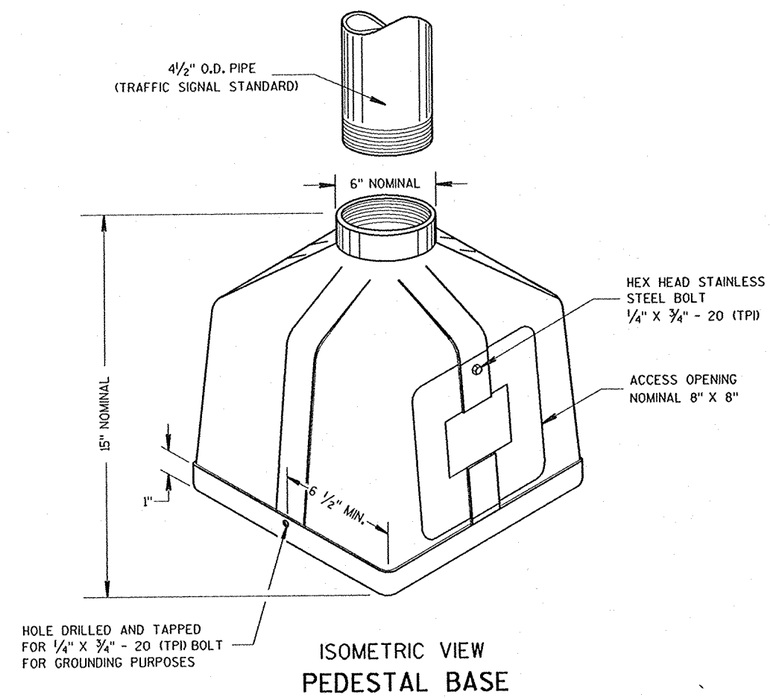

ISOMETRIC VIEW
PEDESTAL BASE

CAST BASES

STATE OF WISCONSIN
DEPARTMENT OF TRANSPORTATION

APPROVED
1-29-88
DATE
STATE TRAFFIC ENGINEER FOR HWYS
FHWA

S.D.D. 9 B 6-2

CONTROL CABINET BASE TYPE	DIMENSIONS				C.Y. CONCRETE (APPROX.)
	H	I	J	K	
TYPE 6 - 30" CABINET	34"	60"	10"	17"	.64
TYPE 7 - 38" CABINET	42"	60"	10"	21"	.93
TYPE 8 - 38" CABINET	42"	72"	12"	21"	1.29
TYPE 9 - VARIABLE	54"	72"	20"	27"	1.56
TYPE 10 - POST MOUNT	AS SHOWN				.32

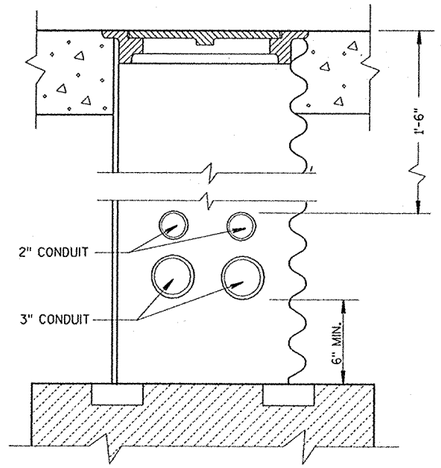

CONDUIT LOCATIONS IN 24" X 36" PULL BOX
(LEADING TO CONTROLLER CABINET BASE TYPE 6, 7, 8 AND 9)

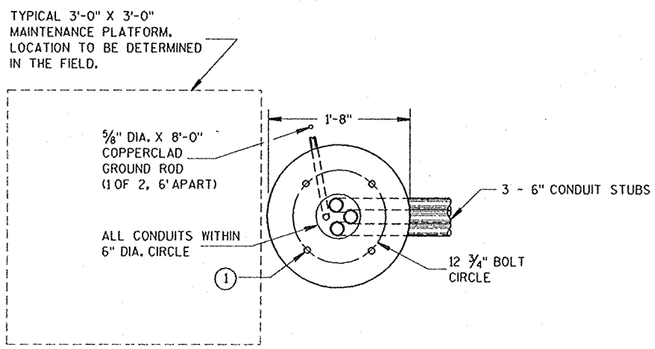

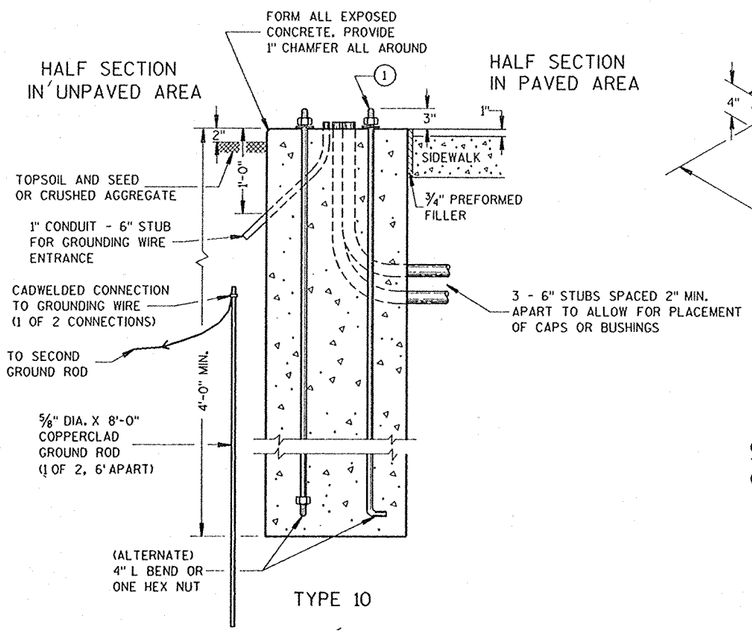

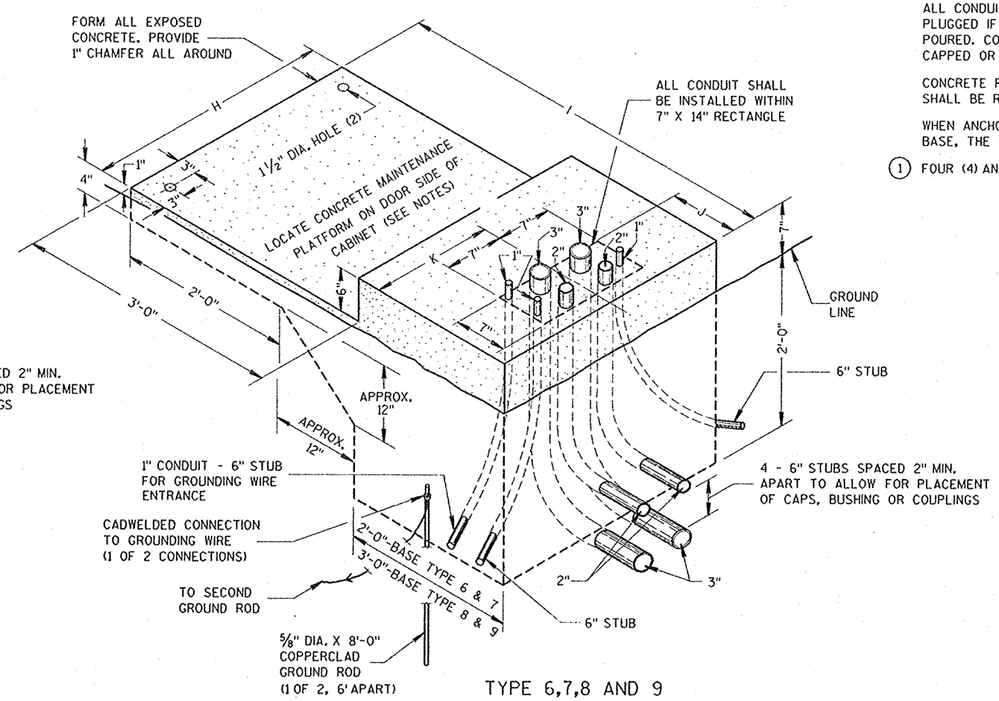

CONCRETE CONTROL CABINET BASES

GENERAL NOTES

DETAILS OF CONSTRUCTION, MATERIALS AND WORKMANSHIP NOT SHOWN ON THIS DRAWING SHALL CONFORM TO THE PERTINENT REQUIREMENTS OF THE CONTRACT.

INSTALL FOUR 1/2 INCH MINIMUM DIAMETER X 4 INCH MINIMUM LENGTH APPROVED CONCRETE MASONRY ANCHORS TO ANCHOR THE CABINET TO TYPE 6, 7, 8, AND 9 BASES. THE ANCHOR BOLTS SHALL BE LOCATED AS DIRECTED BY THE ENGINEER TO PROPERLY ANCHOR THE CONTROL CABINET TO THE BASE.

WHEN REQUIRED TO CONNECT NONMETALLIC CONDUIT TO METALLIC CONDUIT, ONLY ADAPTER FITTINGS, U.L. LISTED FOR ELECTRICAL USE, SHALL BE USED.

CONDUIT HEIGHT ABOVE THE CONCRETE BASE SHALL BE 1 INCH.

DEPTH OF CONDUIT INSTALLED BELOW THE TRAVELED WAY SHALL BE 24 INCHES MINIMUM AND 36 INCHES MAXIMUM.

DEPTH OF CONDUIT INSTALLED THAT IS NOT BELOW THE TRAVELED WAY SHALL BE 18 INCHES MINIMUM AND 36 INCHES MAXIMUM.

ANY EXCEPTION TO THE MAXIMUM DEPTH SHALL BE ONLY WITH THE WRITTEN APPROVAL OF THE ENGINEER.

CONTROL CABINET BASE TOP SURFACES SHALL BE TROWEL FINISHED AND LEVEL.

WHEN A TYPE 10 CONTROL CABINET BASE IS USED TO POST MOUNT A CONTROL CABINET, A 36" SQUARE 4" THICK CONCRETE MAINTENANCE PLATFORM SHALL BE REQUIRED ON THE DOOR SIDE OF THE CABINET. THE TOP 1 INCH SHALL BE ABOVE FINISHED GRADE AND BE BROOM FINISHED AND LEVEL.

MAINTENANCE PLATFORMS ARE NOT REQUIRED WHEN THE SURROUNDING AREA IS PAVED.

MINIMUM BENDING RADIUS OF CONDUIT = 6 X THE DIAMETER.

ALL METALLIC CONDUIT ENDS SHALL BE REAMED AND THREADED.

CAP ALL BELOW GRADE METALLIC CONDUIT ENDS IN WHICH WIRE OR CABLE IS NOT BEING INSTALLED.

PLUG ALL BELOW GRADE NONMETALLIC CONDUIT ENDS IN WHICH WIRE OR CABLE IS NOT BEING INSTALLED.

ALL CONDUIT ENDS AT THE TOP OF CONCRETE BASES SHALL BE CAPPED IF METALLIC OR PLUGGED IF NONMETALLIC IMMEDIATELY AFTER PLACEMENT AND BEFORE CONCRETE IS POURED. CONDUITS IN WHICH WIRE OR CABLE IS NOT BEING INSTALLED SHALL REMAIN CAPPED OR PLUGGED.

CONCRETE FORM DEPTH BELOW FINISHED GRADE SHALL BE 6" MAXIMUM. CONCRETE FORMS SHALL BE REMOVED AFTER CONCRETE HAS SET.

WHEN ANCHOR BOLTS USING THE ALTERNATE L BEND ARE FURNISHED FOR THE TYPE 10 BASE, THE 4" L BEND SHALL BE IN ADDITION TO THE SPECIFIED ANCHOR BOLT BAR LENGTH.

(1) FOUR (4) ANCHOR BOLTS, 1" DIA. X 3'-6"

CONCRETE CONTROL CABINET BASES

STATE OF WISCONSIN
DEPARTMENT OF TRANSPORTATION

APPROVED
1-29-88
DATE
STATE TRAFFIC ENGINEER FOR HWYS

FHWA

S.D.D. 9 B 9-2

TABLE OF NOMINAL DIMENSIONS AND WEIGHTS

DIMENSION IN INCHES		TYPE OF PIPE						
		CORRUGATED STEEL						POLYETHYLENE SDR 32.5
PIPE DIAMETER (INSIDE)	A	12	12	18	18	24	24	12
PIPE LENGTH **	B	24	36	24	36	24	36	24
WALL THICKNESS	C	0.064	0.064	0.064	0.064	0.064	0.064	0.4
COVER	D	10 1/4	10 1/4	16 1/4	16 1/4	22 1/4	22 1/4	10 1/4
FRAME	E	14 1/2	14 1/2	20 1/2	20 1/2	26 1/2	26 1/2	14 1/2
FRAME	F	8 1/2	8 1/2	14 1/2	14 1/2	20 1/2	20 1/2	8 1/2
FRAME	G	11 1/2	11 1/2	17 1/2	17 1/2	23 1/2	23 1/2	11 1/2
WEIGHT IN POUNDS *								
FRAME AND COVER		60	60	110	110	155	155	60

* THE ACTUAL WEIGHT OF THE MANHOLE FRAME AND COVER MAY VARY WITHIN 5 PERCENT PLUS OR MINUS OF THE WEIGHTS SHOWN.

** NORMALLY USED LENGTHS. THE PROJECT ENGINEER SHALL DETERMINE IF PIPE LENGTHS, OTHER THAN THOSE SPECIFIED, SHALL BE USED.

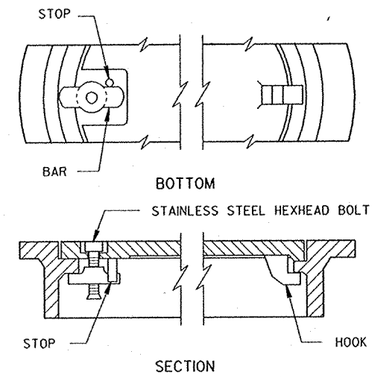

ALTERNATE COVER (LOCKING)

TIGHTENING BAR TYPE

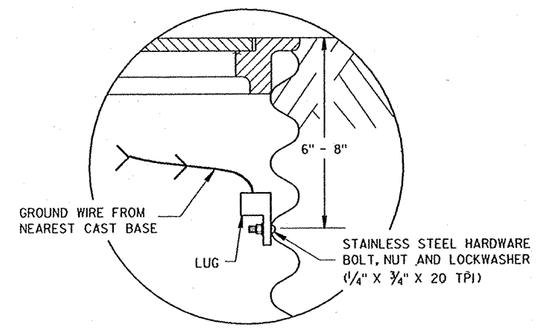

GROUNDING LUG AND LOCATION IN STEEL PULL BOXES

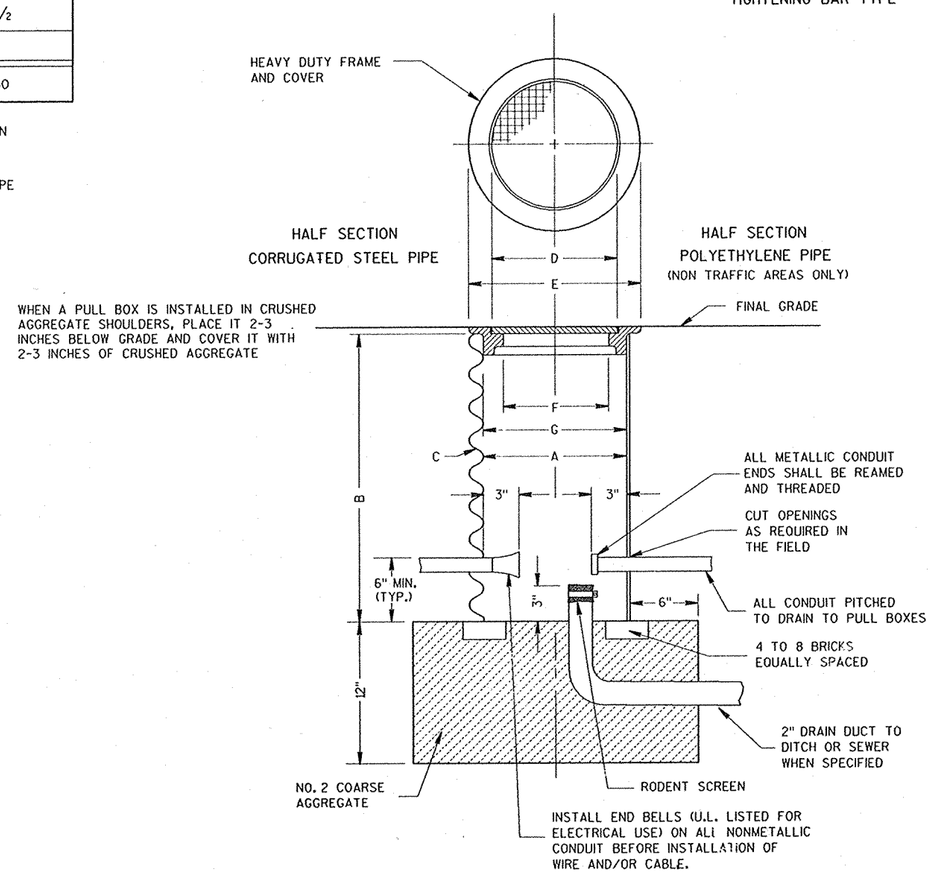

PULL BOX

GENERAL NOTES

DETAILS OF CONSTRUCTION, MATERIALS AND WORKMANSHIP NOT SHOWN ON THIS DRAWING SHALL CONFORM TO THE PERTINENT REQUIREMENTS OF THE CONTRACT.

ALL FRAMES AND COVERS SHALL BE HEAVY DUTY TYPE, SUITABLE FOR VEHICULAR TRAFFIC LOADS. LOCKING TYPE COVERS ARE NOT REQUIRED UNLESS SPECIFIED IN THE CONTRACT.

ENTRANCE HOLES INTO PULL BOXES SHALL BE CUT WITH A CIRCULAR HOLE SAW OR HYDRAULIC CONDUIT PUNCH. HOLE SIZE SHALL BE THE OUTSIDE DIAMETER OF THE CONDUIT THAT IS TO FIT IN THE OPENING PLUS NO MORE THAN 1/4".

THE CONTRACTOR SHALL NOT INSTALL WIRE IN ANY PULL BOX UNTIL ITS INSTALLATION HAS BEEN INSPECTED AND ACCEPTED BY THE ENGINEER.

GROUNDING LUGS (MECHANICAL CONNECTORS) SHALL BE U.L. LISTED AND APPROVED FOR USE WITH COPPER WIRE. THE MECHANICAL CONNECTION (INSIDE AND OUTSIDE) TO THE PULL BOX, SHALL BE TOTALLY AND PERMANENTLY SEALED WITH A SILICONE OR RUBBERIZED CAULKING COMPOUND AS APPROVED BY THE ENGINEER.

GROUNDING LUGS ARE NOT REQUIRED IN PULL BOXES WHEN VOLTAGES OF LESS THAN 50 VOLTS AC ARE THE ONLY VOLTAGES ENCOUNTERED IN THE BOXES.

DRAIN DUCT SHALL BE MEASURED AND PAID FOR SEPARATELY.

RODENT SCREEN SHALL BE 1/8" GALVANIZED STEEL MESH AND BE INSTALLED WITH A STAINLESS STEEL HOSE CLAMP OF SUFFICIENT SIZE.

ALL METALLIC CONDUIT IN WHICH WIRE AND/OR CABLE IS TO BE INSTALLED, SHALL BE BUSHED BEFORE INSTALLATION OF THE WIRE AND/OR CABLE.

PULL BOX

STATE OF WISCONSIN
DEPARTMENT OF TRANSPORTATION

APPROVED
1-29-88
DATE
STATE TRAFFIC ENGINEER FOR HWYS
FHWA

S.D.D. 9 B 10-2

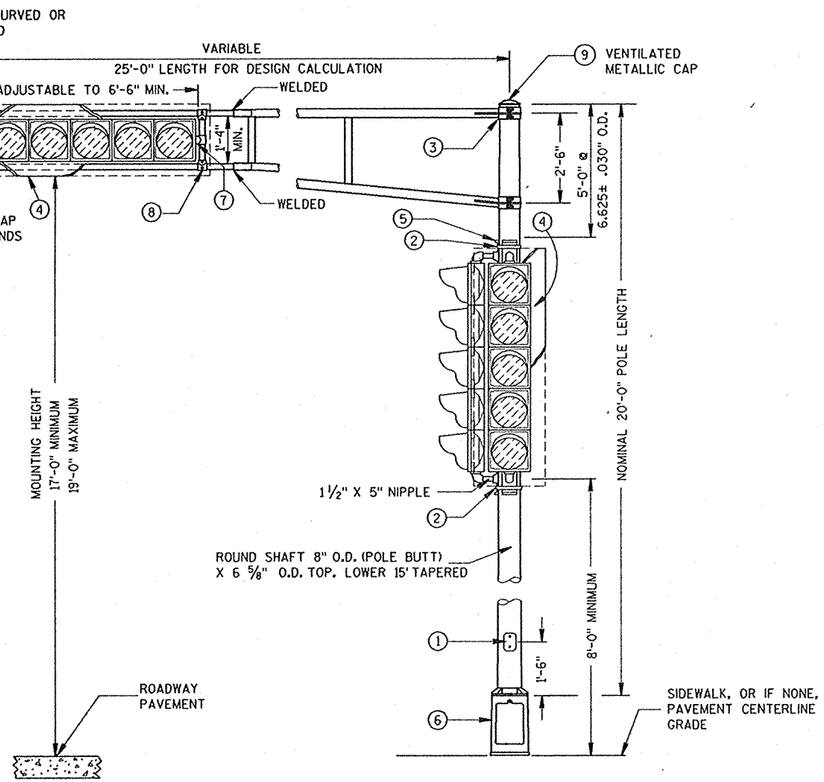

TYPE 2 POLE MOUNTING CONFIGURATION
(MAXIMUM LOAD)

GENERAL NOTES

1. 4" X 6" HANDHOLE & COVER ASSEMBLY WITH 1/4" X 3/4" - 20 TPI HEX HEAD STAINLESS STEEL BOLTS.
2. SIGNAL MOUNTING BRACKETS. MOUNT WITH CAP SCREWS AND BANDING. (SEE SPECIAL PROVISIONS).
3. GROMMETS OR 1" CHASE NIPPLES WITH LOCKNUTS SHALL BE PROVIDED FOR 1 3/8" HOLE IN POLE SHAFT.
4. BACKPLATE REQUIRED TO SURROUND SIGNAL FACES. BACKPLATE TO EXTEND 5" BEYOND EXTREMITIES OF SIGNAL HEAD.
5. SPACERS INSTALLED TO PLUMB HEADS AS NEEDED.
6. CAST ALUMINUM TRANSFORMER BASE, WHEN REQUIRED.
7. 1 1/2" PIPE THREAD ON THE MOUNTING BRACKET NIPPLES FOR THE SIGNAL HEAD. NIPPLE SHALL BE 1 1/2" X 2".
8. VERTICAL STRUT (ADJUSTABLE). ONE (1) SET SCREW (1/4" X 3/4" LONG-20 TPI, STAINLESS STEEL, HEX HEAD) INTO EACH ARM MEMBER IF STRUT IS THE SLIDING TYPE.
9. METALLIC CAPS SHALL BE FASTENED WITH 1/4" X 3/4" - 20 TPI STAINLESS STEEL, HEX HEAD BOLTS.

NOTE:
SHEET SDD 9 B 11-1e IS REQUIRED WHEN THIS DRAWING IS CALLED FOR IN THE PLANS.

POLE MOUNTINGS FOR TRAFFIC SIGNALS TYPE 2

STATE OF WISCONSIN
DEPARTMENT OF TRANSPORTATION

S.D.D. 9 B 11-1c

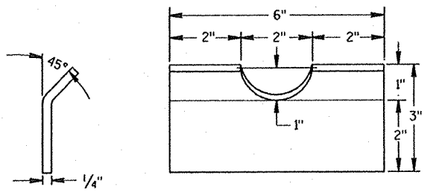

END VIEW

FRONT VIEW

RECTANGULAR CLAMP SHIM

(4 TO A SET)

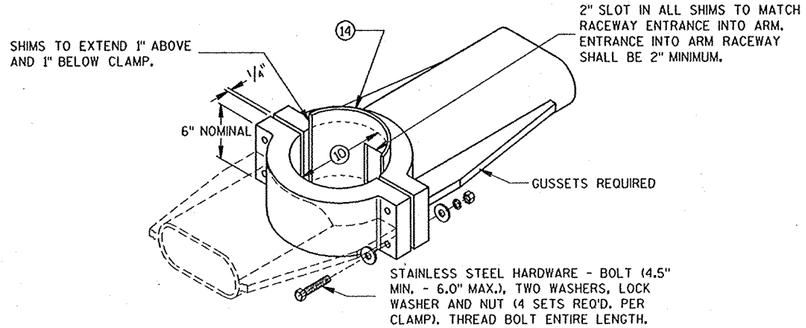

TYPICAL TROMBONE MAST ARM AND LUMINAIRE MAST ARM MOUNTING CLAMP

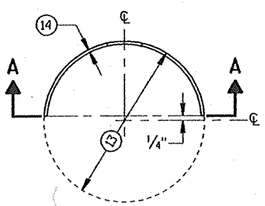

PLAN VIEW

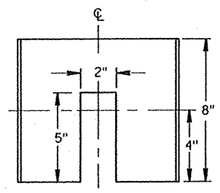

SECTION A-A

CIRCULAR CLAMP SHIM

(2 TO A SET)

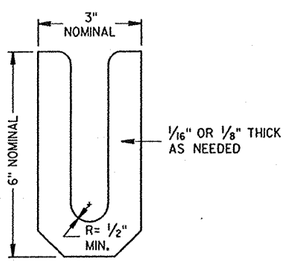

LEVELING SHIM (15)

GENERAL NOTES

(10) 4.5" I.D. FOR LUMINAIRE MAST ARM CLAMP.
6.625" I.D. FOR TROMBONE MAST ARM CLAMP.

(11) INDIVIDUAL BOLT COVERS FOR BASE PLATE.

(12) BASE PLATE SLOTTED TO ACCEPT 11" THROUGH 12" BOLT CIRCLE USING 1" DIAMETER ANCHOR BOLTS.

(13) OUTSIDE SHIM DIAMETER - (4.5" O.D. FOR LUMINAIRE MAST ARM)
(6.625" O.D. FOR TROMBONE MAST ARM)

(14) VARIABLE SHIM THICKNESS - (0.10", 0.25", 0.35", 0.53" OR 0.70")

SHIM THICKNESS FOR TROMBONE MAST ARMS MAY BE TYPICALLY 0.35", 0.53" OR 0.70".

SHIM THICKNESS FOR LUMINAIRE MAST ARMS MAY BE TYPICALLY 0.10", 0.25" OR 0.35".

SHIM MATERIAL SHALL BE ALUMINUM ALLOY.

SHIM THICKNESS SHALL BE IMPRESSED INTO EACH SHIM. NUMERALS SHALL BE 1/4" HIGH AND LEGIBLE.

THE CONTRACTOR SHALL SUBMIT TWO COPIES OF ALL SHIM SHOP DRAWINGS TO THE ENGINEER FOR APPROVAL.

(15) LEVELING SHIMS, DESIGNED FOR THE PURPOSE, SHALL BE USED WHEN PLUMBING POLES. THE USE OF WASHERS IN LIEU OF PROPER LEVELING SHIMS IS NOT ACCEPTABLE. LEVELING SHIMS SHALL BE USED ONLY BETWEEN THE TOP OF THE CONCRETE BASE AND A METALLIC BASEPLATE.

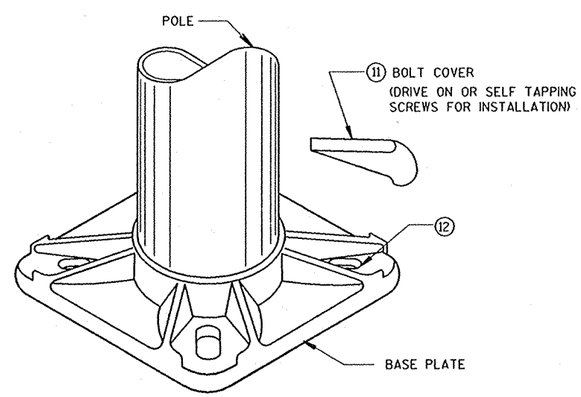

BASE PLATE

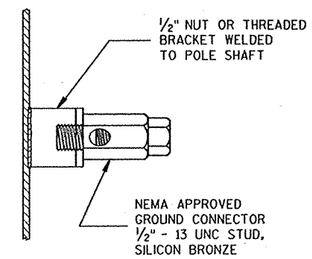

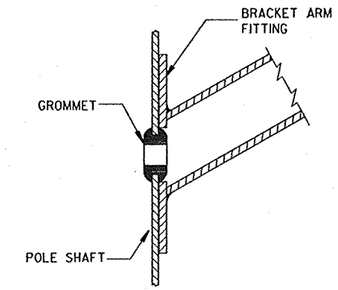

TYPICAL APPLICATION OF GROMMET IN POLE SHAFT

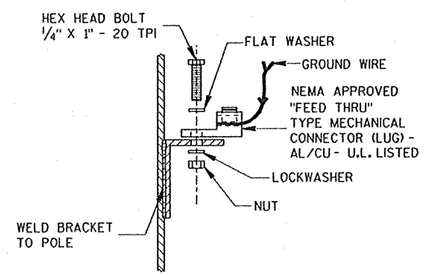

TYPICAL GROUNDING CONNECTIONS

NUT, BOLT AND WASHERS SHALL BE STAINLESS STEEL

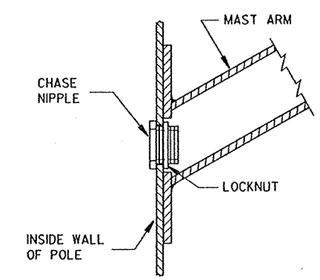

TYPICAL APPLICATION OF CHASE NIPPLE IN POLE SHAFT

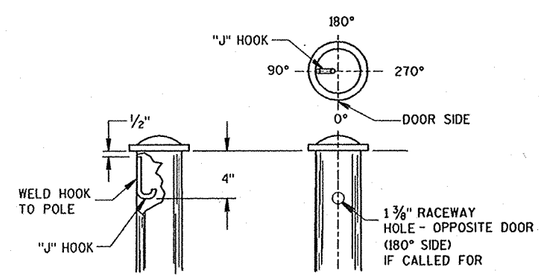

TYPICAL "J" HOOK LOCATION

NOTE:

THIS DRAWING IS REQUIRED WHEN DRAWINGS SDD 9 B 11-1a,b,c, OR d IS CALLED FOR IN THE PLANS.

HARDWARE DETAILS FOR POLE MOUNTINGS

STATE OF WISCONSIN
DEPARTMENT OF TRANSPORTATION

APPROVED 8-31-88
DATE

STATE TRAFFIC ENGINEER FOR HWYS

FHWA

S.D.D. 9 B 11-1e

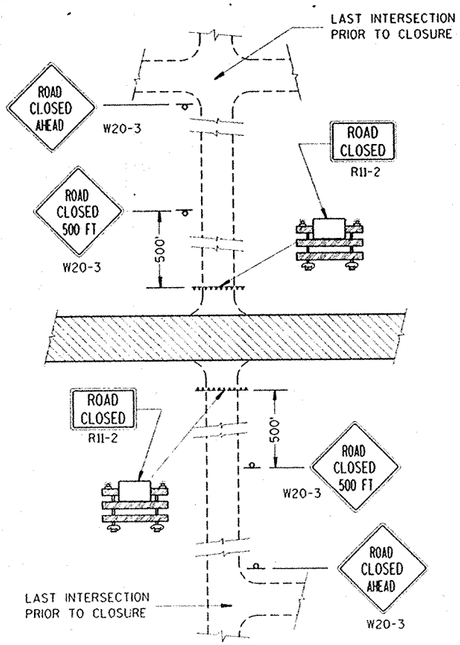

DETAIL 1

(NO ACCESS TO PROJECT)

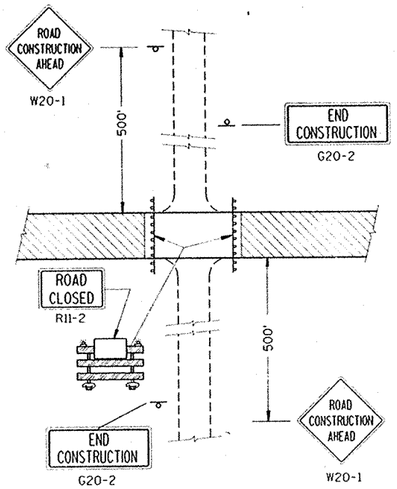

DETAIL 2

(PUBLIC CROSS-TRAFFIC MAINTAINED. NO ACCESS TO PROJECT).

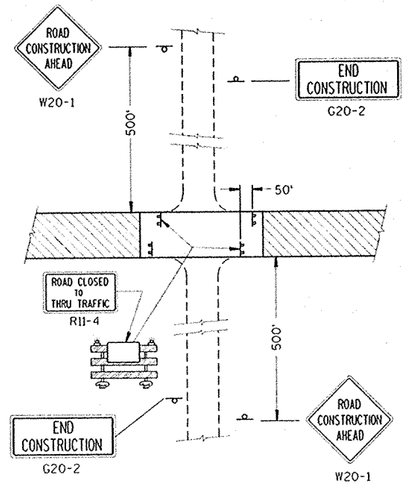

DETAIL 3

(PUBLIC CROSS-TRAFFIC MAINTAINED. CONTRACTOR, LOCAL BUSINESS AND RESIDENT ACCESS).

SIDEROAD CLOSURES

GENERAL NOTES

DETAILS OF TRAFFIC CONTROL DEVICES AND THEIR LOCATION NOT SHOWN ON THIS DRAWING SHALL CONFORM TO THE PERTINENT REQUIREMENTS OF THE WISCONSIN MANUAL OF TRAFFIC CONTROL DEVICES, THE PLANS, SPECIFICATIONS AND CONTRACT.

SIGN AND BARRICADE LOCATIONS MAY BE ADJUSTED IN THE FIELD AS DIRECTED BY THE ENGINEER. ANY EXISTING TRAFFIC SIGNS THAT CONFLICT WITH THIS WORK SHALL BE COVERED AS DIRECTED BY THE ENGINEER. ALL "STOP" OR OTHER REGULATORY SIGNS ON THE SIDE ROADS SHALL NOT BE DISTURBED, EXCEPT WHEN NECESSARY TO COMPLETE THE WORK. THE SIGNS MUST THEN BE IMMEDIATELY REESTABLISHED.

ALL TYPE III BARRICADES SHALL HAVE RAILS REFLECTORIZED ON BOTH FACES. STRIPES SHALL BE PROPERLY SLOPED DOWN TOWARD THE TRAFFIC SIDE OR AS SHOWN IN THE ROAD CLOSURE BARRICADE DETAIL FOR FULL ROAD CLOSURES. TYPE "A" LOW INTENSITY FLASHING WARNING LIGHTS SHALL BE VISIBLE ON BOTH SIDES OF THE BARRICADE.

THE ROAD CLOSED SIGN (R11-2), ROAD CLOSED ____ MILES AHEAD SIGN (R11-3) AND THE ROAD CLOSED TO THRU TRAFFIC SIGN (R11-4) SHALL BE ATTACHED ONLY TO THE TOP RAIL OF THE TYPE III BARRICADE. THE SIGNS SHALL NOT COVER MIDDLE RAIL.

TYPE "H" REFLECTIVE SHEETING SHALL BE USED ON ALL BARRICADES, TYPE I, II AND III, AND ON ALL R11-2, R11-3 AND R11-4 SIGNS.

ALL SIGNS SHALL BE 48" X 48" UNLESS OTHERWISE NOTED BELOW:
R11-2, "ROAD CLOSED" SIGNS SHALL BE 48" X 30".
R11-3, AND R11-4 SIGNS SHALL BE 60" X 30".
G20-2 SIGNS SHALL BE 60" X 24".

(1) TWO WARNING LIGHTS SHALL BE PROVIDED ON THE CENTER BARRICADE AND AT LEAST ONE WARNING LIGHT SHALL BE PROVIDED ON EACH OF THE OTHER BARRICADES WITHIN THE ROADWAY LIMITS. SPACING OF THE WARNING LIGHTS SHALL BE UNIFORM TO THE EDGE OF ROADWAY AS SHOWN.

(2) THESE SIGNS AND BARRICADES ARE NOT REQUIRED IF ROAD CLOSURE BEGINS AT INTERSECTION.

(3) FOR ROAD CLOSURE WITH LOCAL ACCESS TO PROJECT. SEE LANE CLOSURE BARRICADE DETAIL.

(4) FOR ROAD CLOSURE WITHOUT LOCAL ACCESS TO PROJECT. SEE ROAD CLOSURE BARRICADE DETAIL.

(5) ONE-WAY LIGHTS SHALL BE PROVIDED ON ALL ADVANCE WARNING SIGNS. THE UNIT SHALL BE POSITIONED SUCH THAT THE LIGHT SOURCE IS OUTSIDE THE SIGN FACE AND AT THE TOP OF THE SIGN.

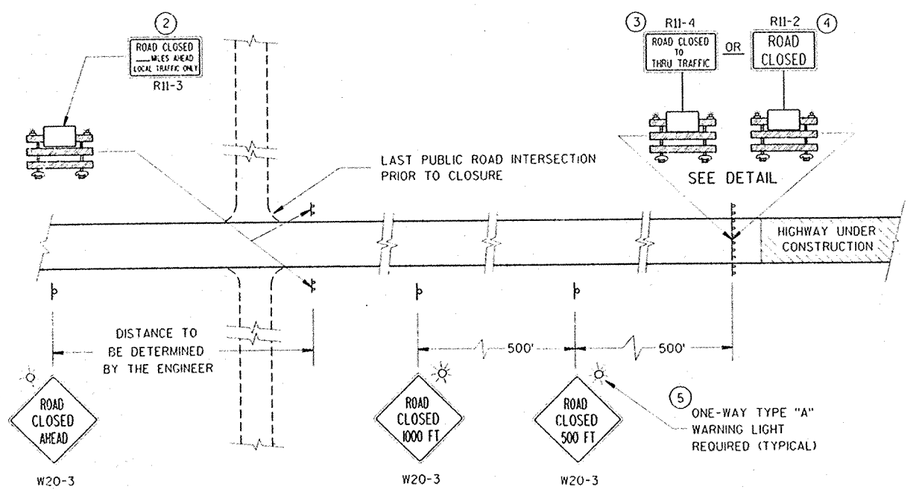

MAINLINE CLOSURE

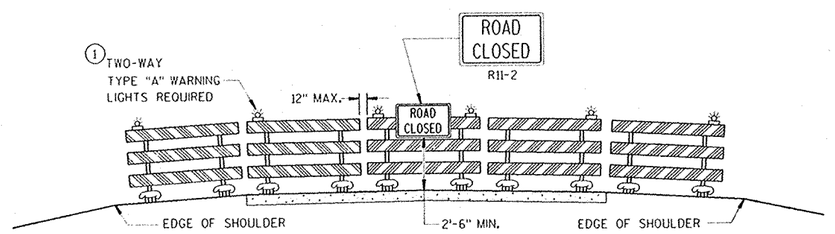

APPROACH VIEW

ROAD CLOSURE BARRICADE DETAIL

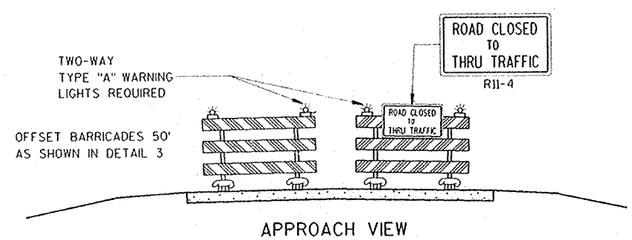

APPROACH VIEW

LANE CLOSURE BARRICADE DETAIL

LEGEND

- POST MOUNTED WARNING SIGN
- TYPE III BARRICADES WITH TYPE "H" REFLECTIVE SHEETING
- TYPE "A" LOW INTENSITY FLASHING WARNING LIGHT (FOR NIGHT USE)
- WORK AREA

BARRICADES AND TRAFFIC CONTROL FOR ROAD CLOSURES

STATE OF WISCONSIN
DEPARTMENT OF TRANSPORTATION

APPROVED 10-31-89 DATE — STATE TRAFFIC ENGINEER FOR HWYS

FHWA

S.D.D. 15 C 2-2

GENERAL NOTES

DETAILS OF INSTALLATION, MATERIALS AND WORKMANSHIP NOT SHOWN ON THIS DRAWING SHALL CONFORM TO THE PERTINENT REQUIREMENTS OF THE STANDARD SPECIFICATIONS AND APPLICABLE SPECIAL PROVISIONS.

ALL LETTERS AND ARROWS SHALL BE WHITE AND REFLECTORIZED.

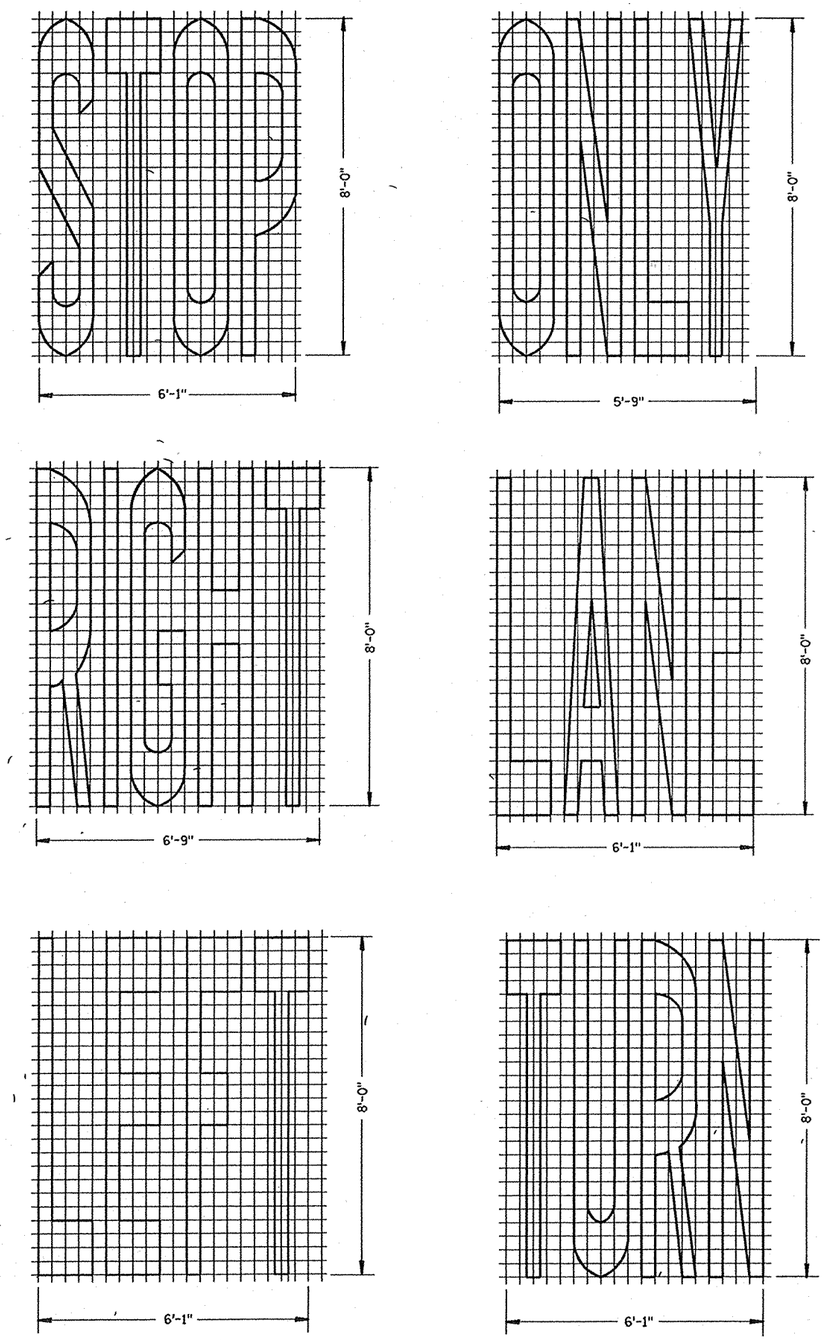

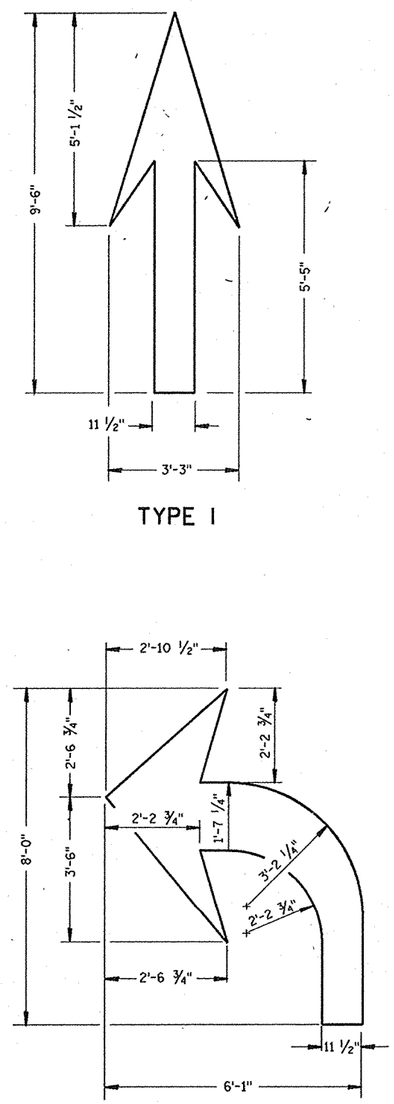

TYPE 1

TYPE 2

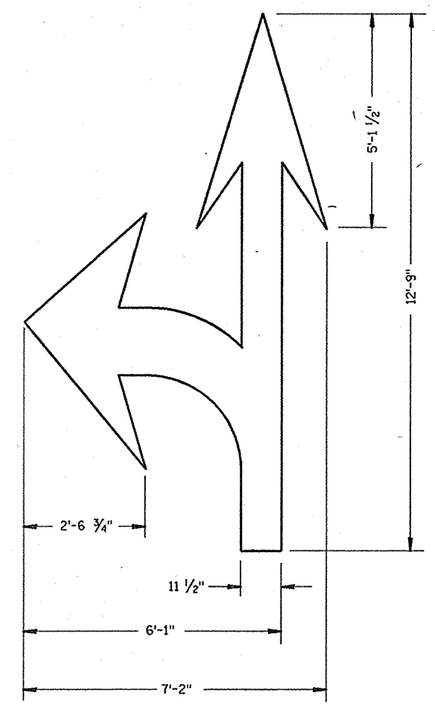

TYPE 3

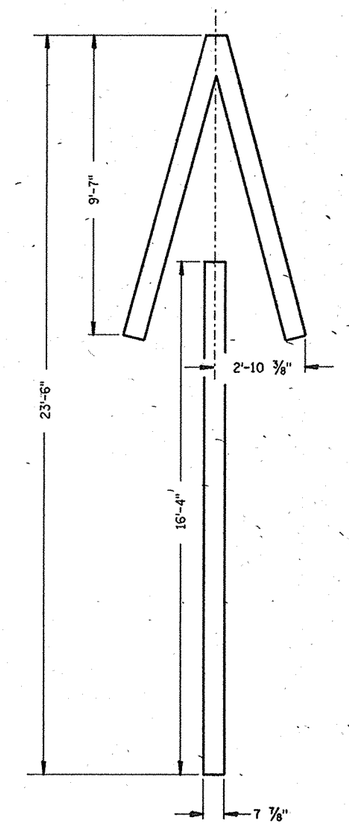

TYPE 4

PAVEMENT MARKING SYMBOLS

STATE OF WISCONSIN
DEPARTMENT OF TRANSPORTATION

APPROVED 5-23-86 DATE

STATE TRAFFIC ENGINEER FOR HWYS

FHWA

S.D.D. 15 C 7-1

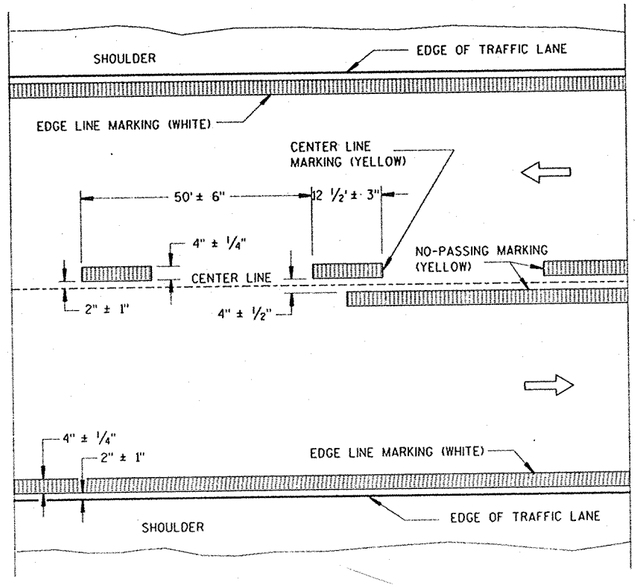

TWO WAY TRAFFIC

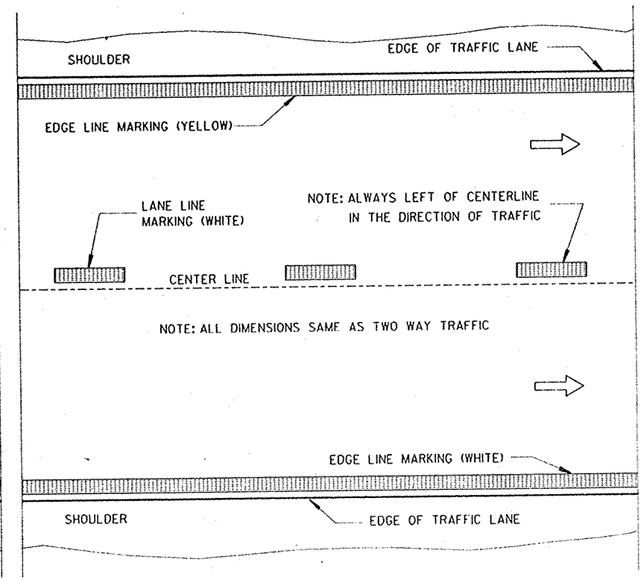

ONE WAY TRAFFIC

PERMANENT PAVEMENT MARKING

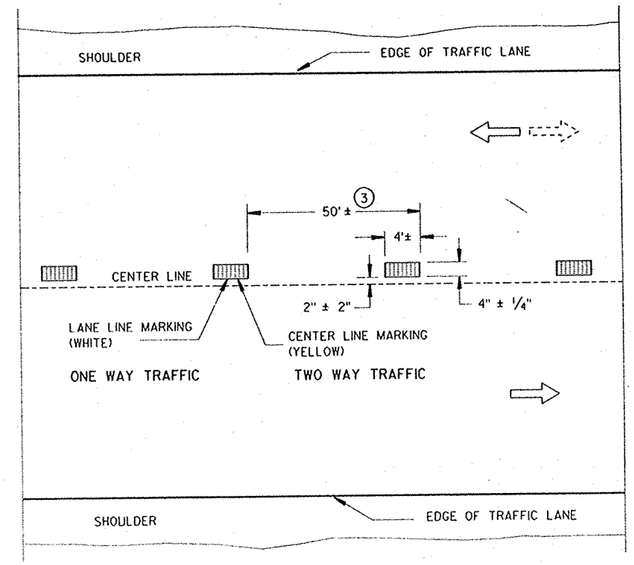

TEMPORARY PAVEMENT MARKING

GENERAL NOTES

DETAILS OF CONSTRUCTION NOT SHOWN ON THIS DRAWING SHALL CONFORM TO STANDARD SPECIFICATIONS AND SPECIAL PROVISIONS.

EDGE LINES SHALL BE OMITTED THROUGH INTERSECTIONS. EDGE LINES SHALL BE CONTINUED THROUGH DRIVEWAYS.

1. WHEN DISTANCE "A" IS LESS THAN 250 FEET, OMIT TURNING LANE MARKING.
2. WHEN DISTANCE "B" IS LESS THAN 100 FEET, OMIT CHANNELIZING LANE LINE.
3. HALF CYCLE LENGTHS (25'±) WITH 2' MINIMUM STRIPE LENGTHS SHALL BE PROVIDED ON ROADWAYS (INCLUDING TEMPORARY TRAVELED WAYS) WITH REVERSE CURVATURE, CURVATURE OF OVER 5 DEGREES OR WHEN DIRECTED BY THE ENGINEER TO MARK UNUSUAL ALIGNMENT OF THE TRAVELED WAY.

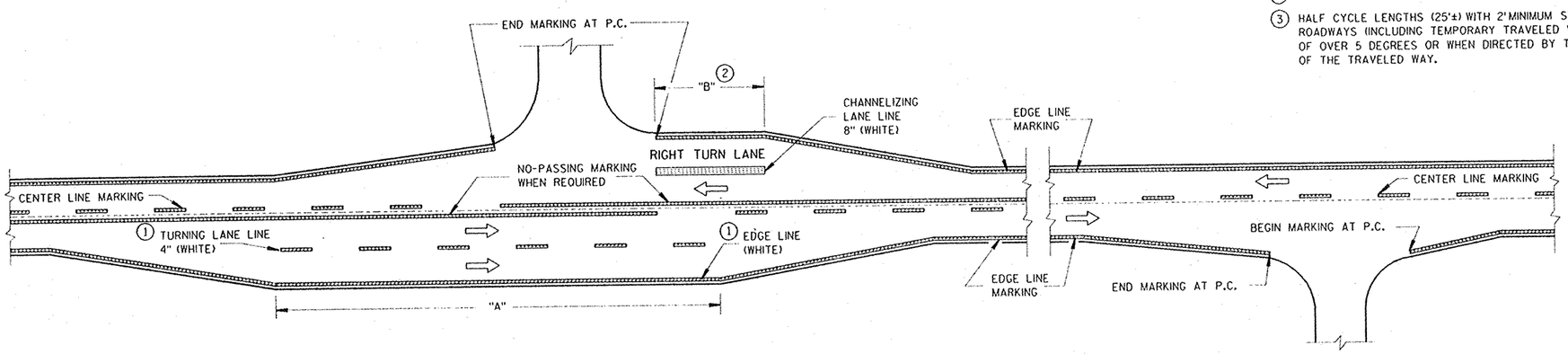

MAJOR INTERSECTION

MINOR INTERSECTION

TYPICAL PAVEMENT MARKING FOR RURAL INTERSECTIONS

PAVEMENT MARKING

STATE OF WISCONSIN
DEPARTMENT OF TRANSPORTATION

APPROVED
3-10-89
DATE
STATE TRAFFIC ENGINEER FOR HWYS
FHWA

S.D.D. 15 C 8-3

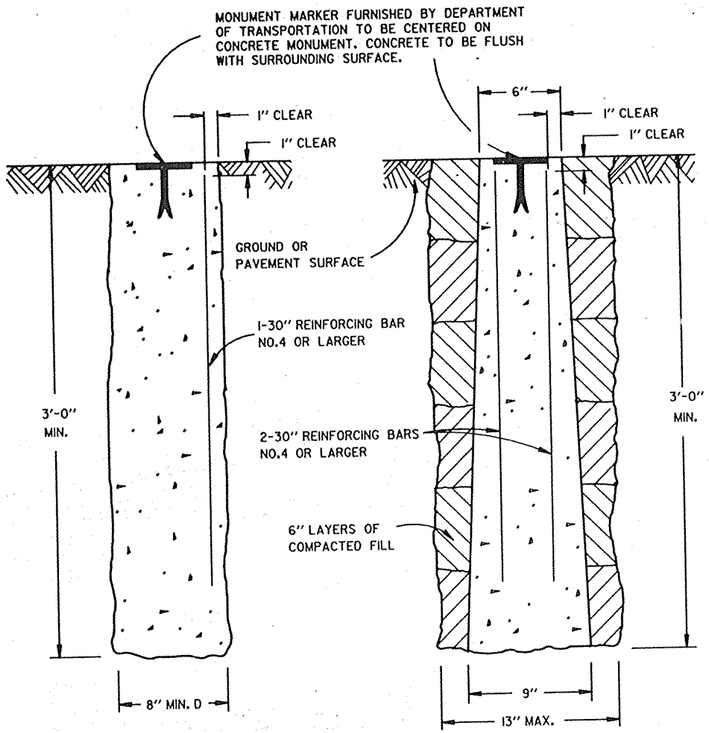

CAST-IN-PLACE

PRECAST

CONCRETE MONUMENTS

TYPE A

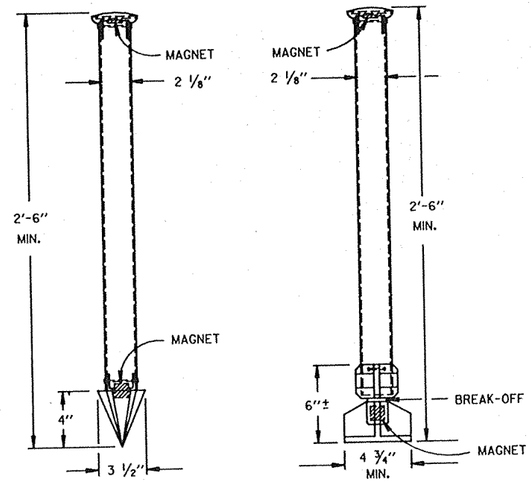

TYPE C

DRIVE-IN MONUMENT

TYPE D

BREAK-OFF MONUMENT

ALUMINUM MONUMENTS

(INCLUDES MARKER)

GENERAL NOTES

DETAILS OF CONSTRUCTION, MATERIALS AND WORKMANSHIP NOT SHOWN ON THIS DRAWING SHALL CONFORM TO THE PERTINENT REQUIREMENTS OF THE STANDARD SPECIFICATIONS AND THE APPLICABLE SPECIAL PROVISIONS.

DETAILED DRAWINGS OF PROPOSED ALTERNATE DESIGNS FOR METAL MONUMENTS OR MONUMENT COVERS SHALL BE SUBMITTED TO THE ENGINEER FOR APPROVAL.

THE INSTALLED METAL MONUMENT MUST BE EASILY DETECTED WITH A DIP NEEDLE. INERT PERMANENT MAGNETS SHALL BE ATTACHED NEAR THE TOP AND BOTTOM OF THOSE MONUMENTS CONSTRUCTED OF A METAL ALLOY WHICH IS NOT ATTRACTIVE TO A DIP NEEDLE.

TYPE A AND TYPE D MONUMENTS ARE EQUAL ALTERNATES UNLESS OTHERWISE SPECIFIED.

THE CAST IRON MONUMENT COVER SHALL BE A "NON-ROCKING" TYPE. ADJUSTMENT OF THE COVER TO GRADE MAY BE ACCOMPLISHED BY THE USE OF MORTAR AND BRICK, OR BY EITHER PRECAST OR CAST-IN-PLACE REINFORCED CONCRETE GRADE RINGS.

MONUMENTS SHALL BE LOCATED AND PLACED AT THE DIRECTION OF THE ENGINEER.

ALUMINUM MONUMENTS AND MONUMENT COVERS SHALL BE MADE FROM AN ALUMINUM AND MAGNESIUM ALLOY AS DETERMINED BY THE MANUFACTURER.

THE MONUMENT COVERS DETAILED ON THIS DRAWING ARE NOT EQUAL ALTERNATES. MONUMENT COVERS SHALL BE CAST IRON UNLESS ALUMINUM IS SPECIFIED ELSEWHERE IN THE CONTRACT.

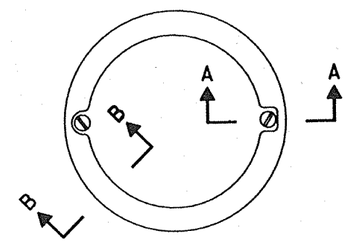

TOP VIEW

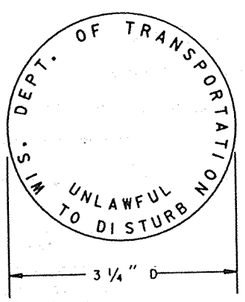

MONUMENT MARKER LOGO

FOR TYPES "A", "C" & "D"

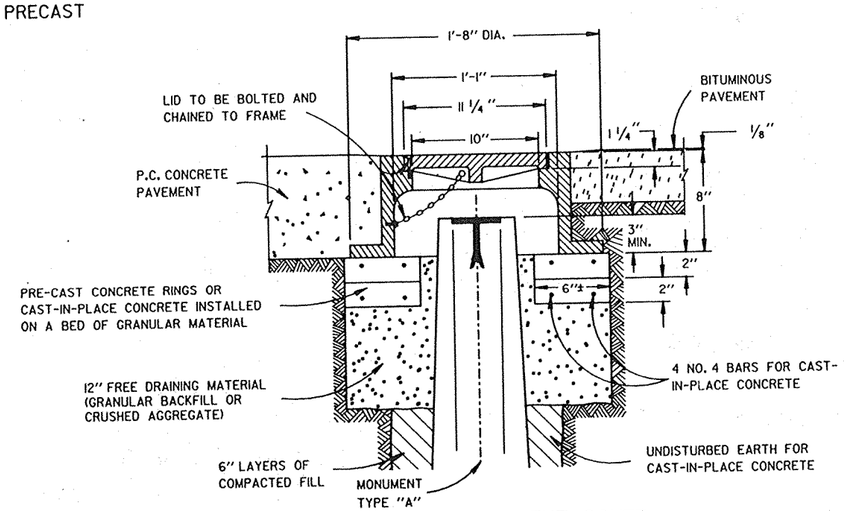

CAST IRON MONUMENT COVER

(APPROXIMATE WEIGHT - 95 LBS.)

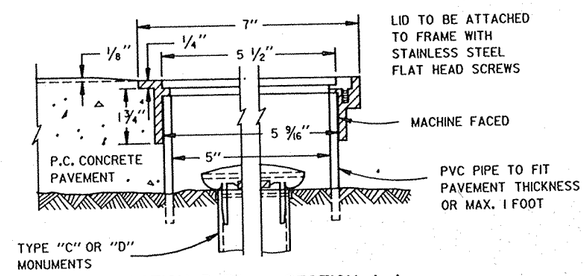

SECTION B-B SECTION A-A

ALUMINUM MONUMENT COVER

(APPROXIMATE WEIGHT 2 LBS)

(FOR CONCRETE PAVEMENT ONLY)

LANDMARK REFERENCE MONUMENTS AND COVERS

STATE OF WISCONSIN
DEPARTMENT OF TRANSPORTATION

APPROVED
6-18-84 DATE
D. J. Strand CHIEF DESIGN ENGINEER
FHWA

S.D.D. 16 A 1-4

S.D.D. 16 A 1-4

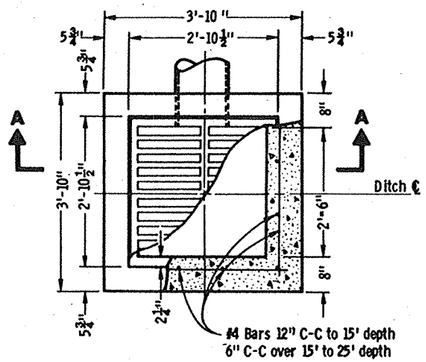

PLAN VIEW

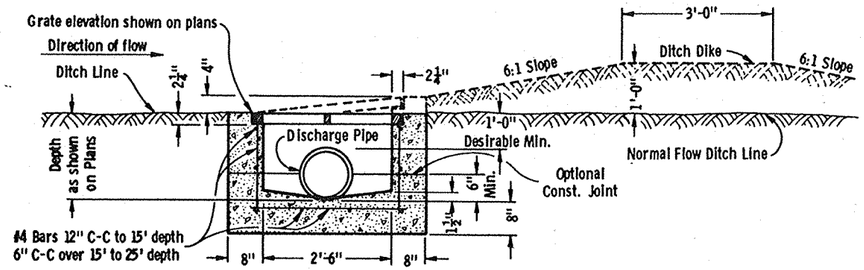

SECTION A-A

INLET TYPE 8

REINFORCED CONCRETE

GENERAL NOTES

Details of construction, materials and workmanship not shown on this drawing shall conform to the pertinent requirements of the Standard Specifications and the applicable Special Provisions.

Detailed drawings for proposed alternate designs for inlets which may include precast reinforced concrete inlets, shall be submitted to the Engineer for approval providing that such alternate designs make provision for equivalent capacity and strength.

Precast reinforced concrete inlet units, if used, shall conform to the requirements of the Catch Basins, Manholes and Inlets Section of the Standard Specification's.

All inlets are designated on the Plans as "Inlets, 8-MS", etc. This designation is interpreted to mean that the number, or first digit designates the masonry portion of the structure and the following letter designates the type of cover or iron casting to be used therewith to comprise the complete unit.

All bar steel reinforcement shall be embedded 2 inches clear unless otherwise shown or noted.

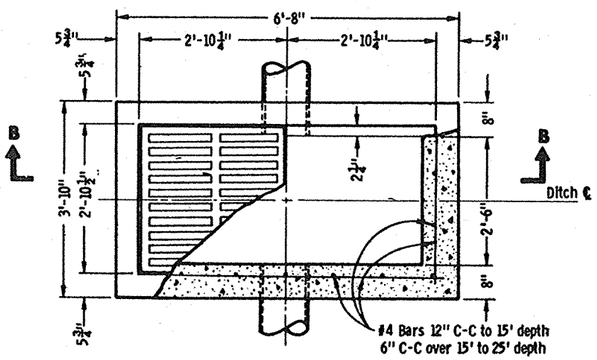

PLAN VIEW

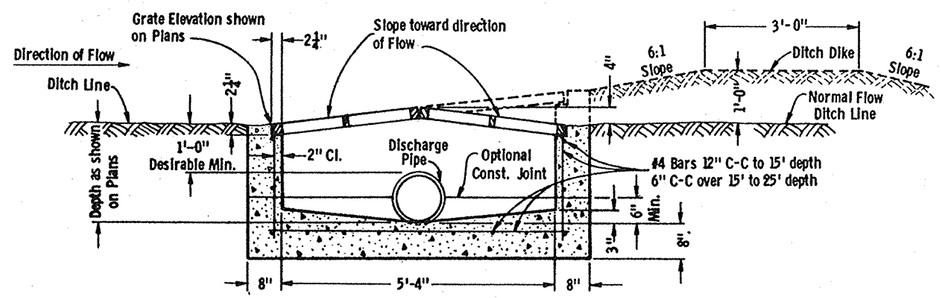

SECTION B-B

INLET TYPE 9

REINFORCED CONCRETE

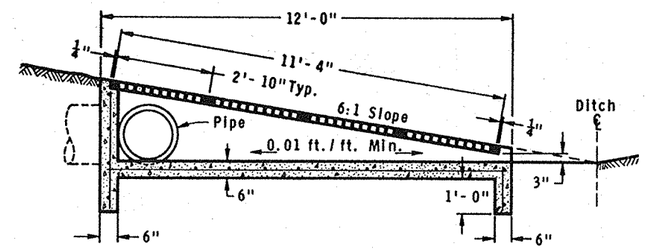

SECTION G-G

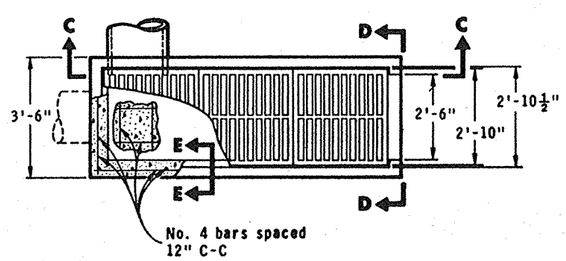

PLAN VIEW

INLET TYPE 10

REINFORCED CONCRETE

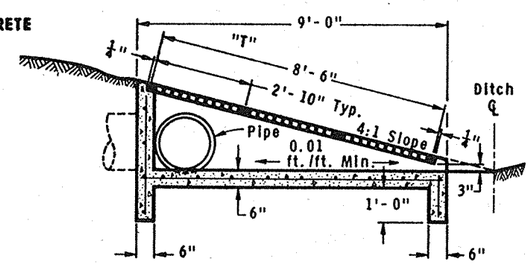

SECTION C-C

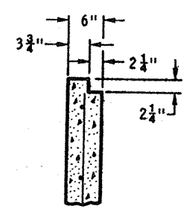

SECTION E-E

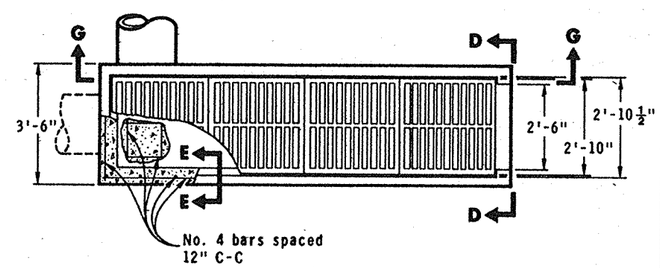

PLAN VIEW

INLET TYPE 11

REINFORCED CONCRETE

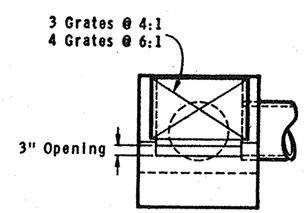

VIEW D-D

INLETS TYPE 8,9,10 and 11

State of Wisconsin
Department of Transportation
Division of Highways

RECOMMENDED FOR APPROVAL:

4-30-74 — DATE — CHIEF of FACILITIES DEVELOPMENT

APPROVED

5-02-74 — DATE — STATE HIGHWAY ENGINEER

S.D.D. 8C5-1

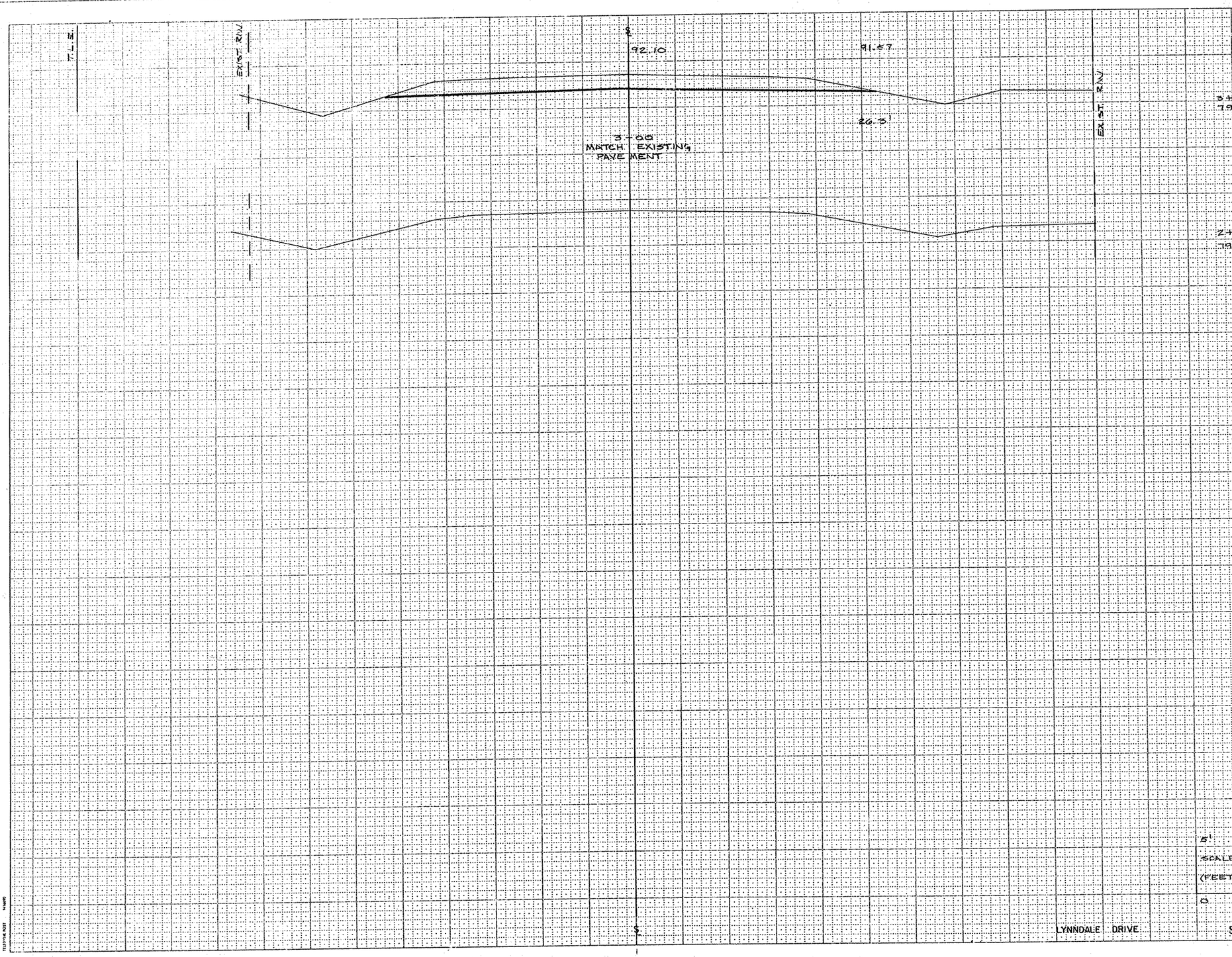

STATE PROJECT NUMBER	SHEET NUMBER
6521-2-71	9.0

STATION	DISTANCE	YARDAGE EXCAVATION UNCL.				FILL

Catalog No. 2130-C121

E-650

STATE PROJECT NUMBER	SHEET NUMBER
652 - 2 - 71	9.1

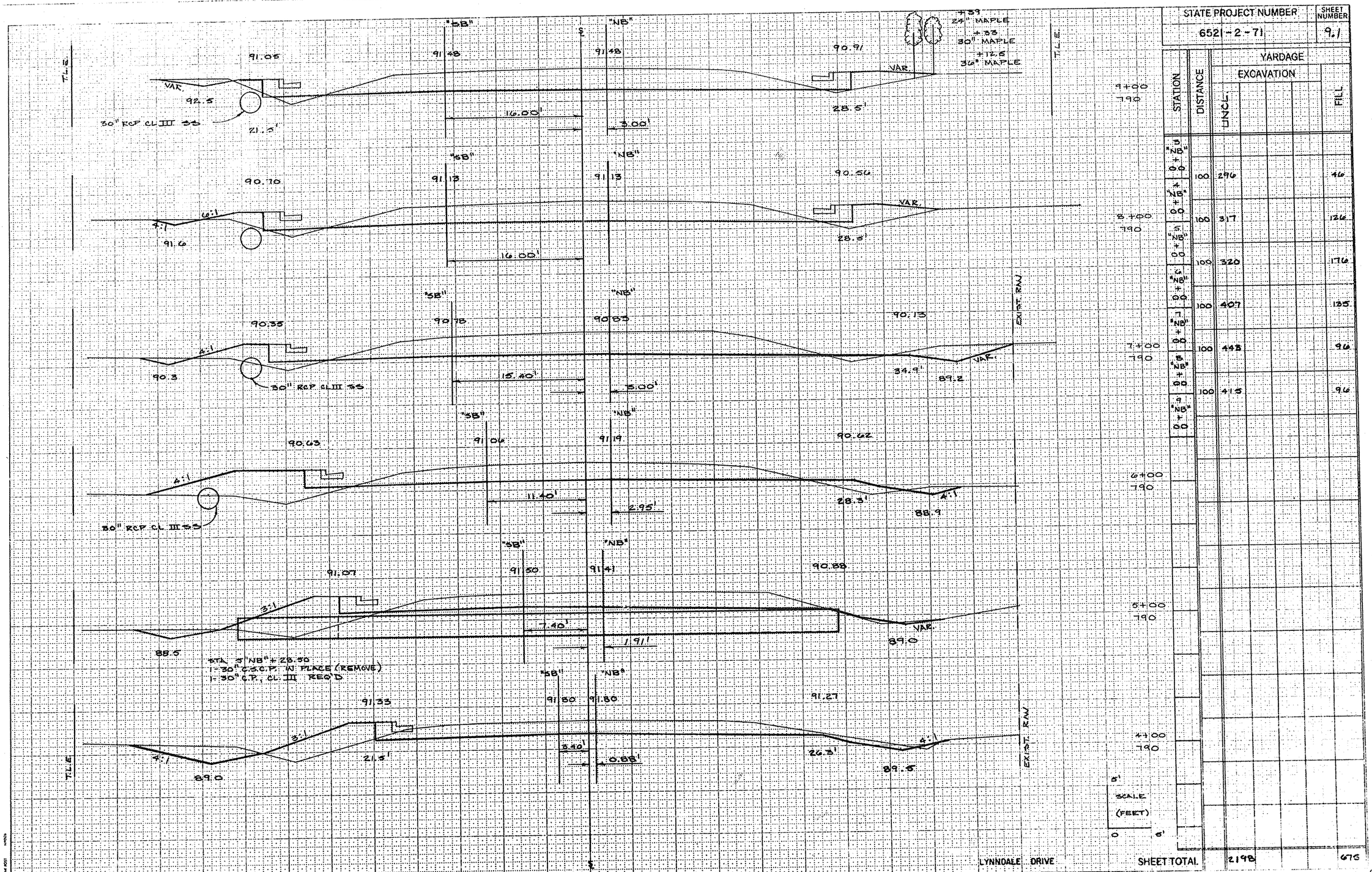

STATION	DISTANCE	YARDAGE EXCAVATION UNCL.	FILL
3 "NB" + 00			
	100	296	46
4 "NB" + 00			
	100	317	126
5 "NB" + 00			
	100	320	176
6 "NB" + 00			
	100	407	135
7 "NB" + 00			
	100	443	96
8 "NB" + 00			
	100	415	96
9 "NB" + 00			
LYNNDALE DRIVE SHEET TOTAL		2198	675

E-660

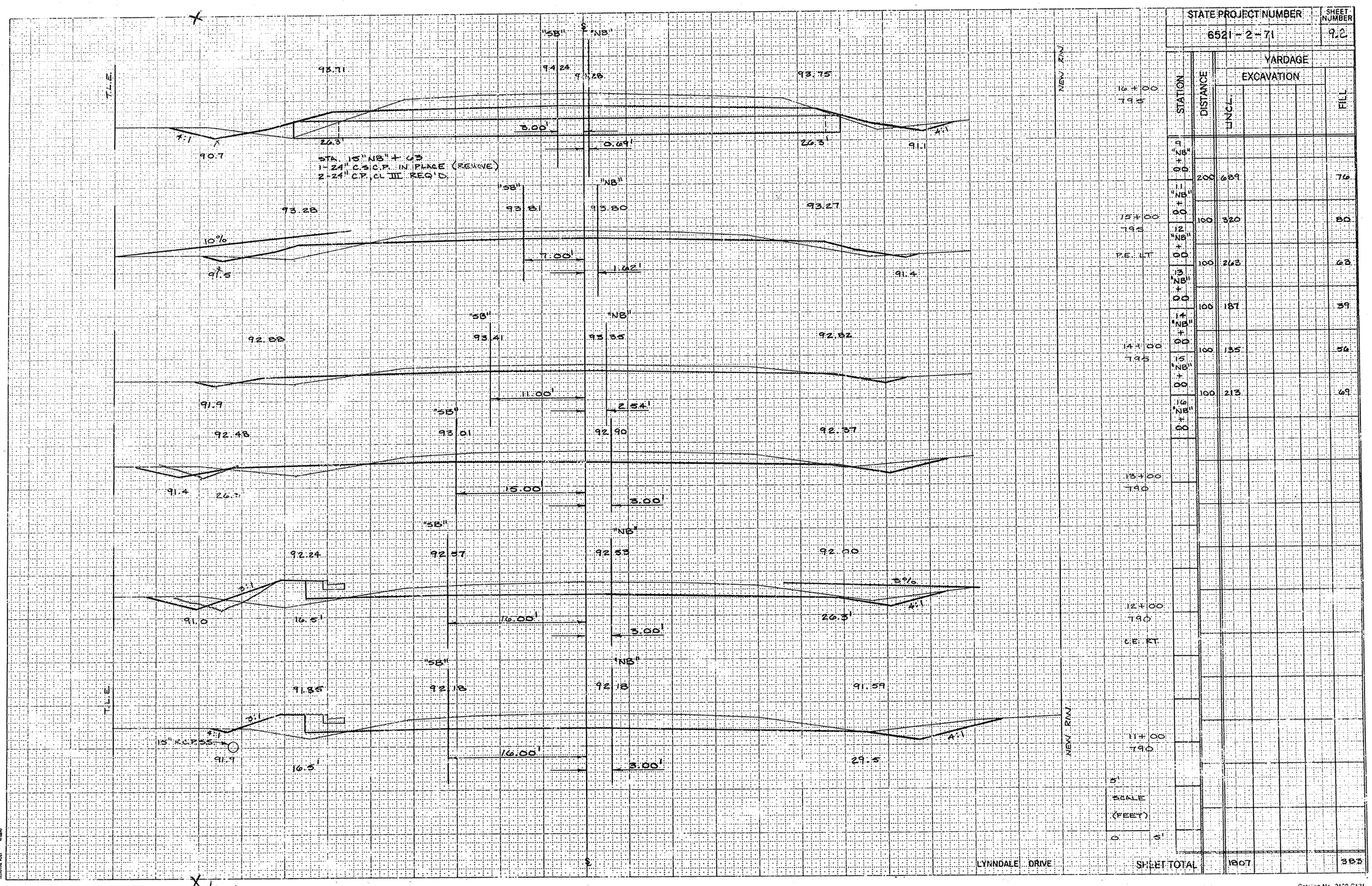

STATE PROJECT NUMBER	SHEET NUMBER
6521 - 2 - 71	9.2

STATION	DISTANCE	YARDAGE EXCAVATION UNCL.	YARDAGE EXCAVATION FILL
9 "NB" + 00			
	200	689	76
11 "NB" + 00			
	100	320	80
12 "NB" + 00			
	100	263	63
13 "NB" + 00			
	100	187	39
14 "NB" + 00			
	100	135	56
15 "NB" + 00			
	100	213	69
16 "NB" + 00			
SHEET TOTAL		1807	383

Catalog No. 2130-C121

E-650

X
15' R/W

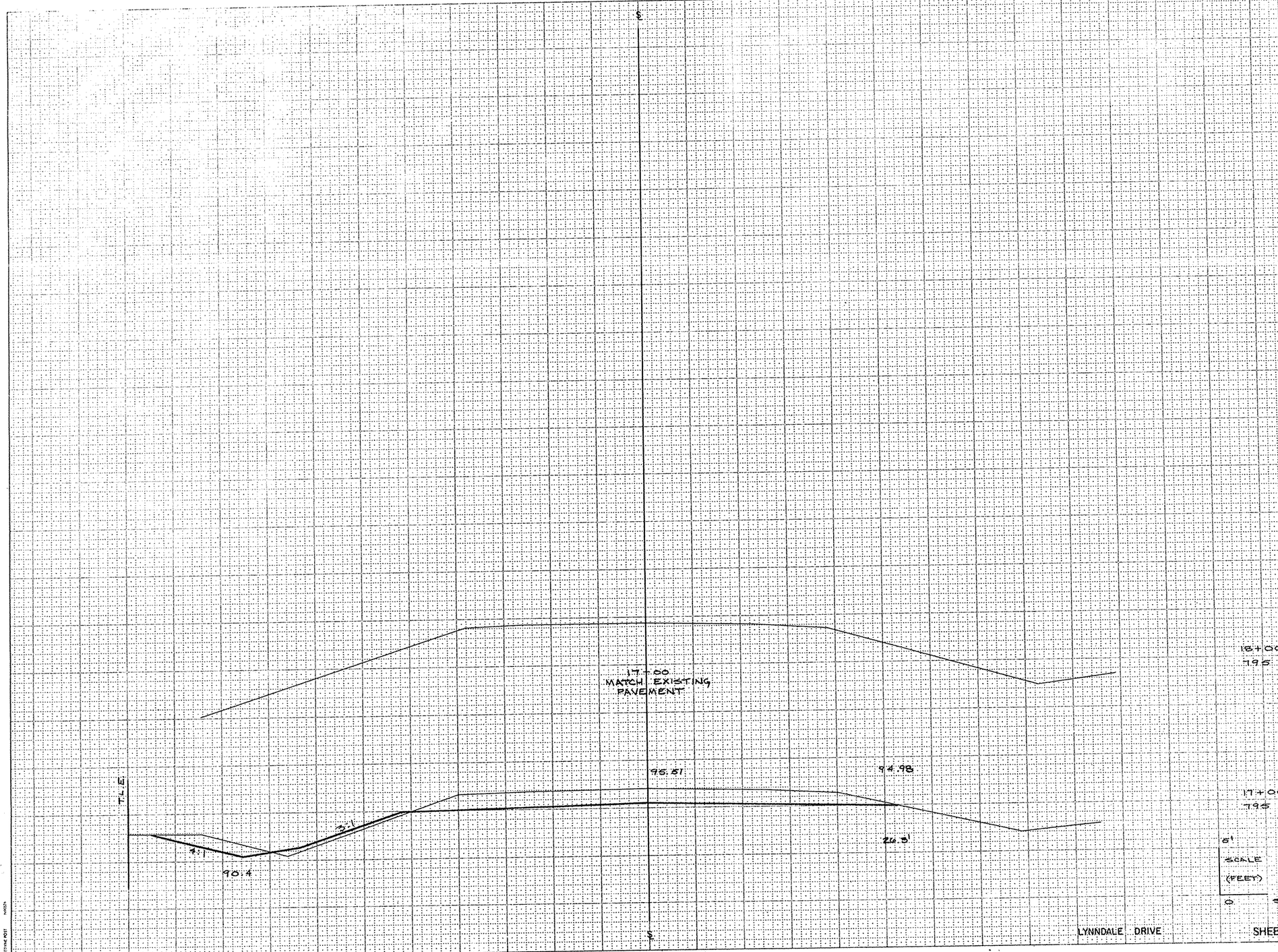

STATE PROJECT NUMBER	SHEET NUMBER
6521-2-71	9.3

STATION	DISTANCE	YARDAGE EXCAVATION UNCL.	YARDAGE EXCAVATION	YARDAGE EXCAVATION	YARDAGE EXCAVATION	YARDAGE FILL
17+00 "BL" to 18+00 "BL"	100	298				43
SHEET TOTAL		298				43

Catalog No. 2130-01

E-USC

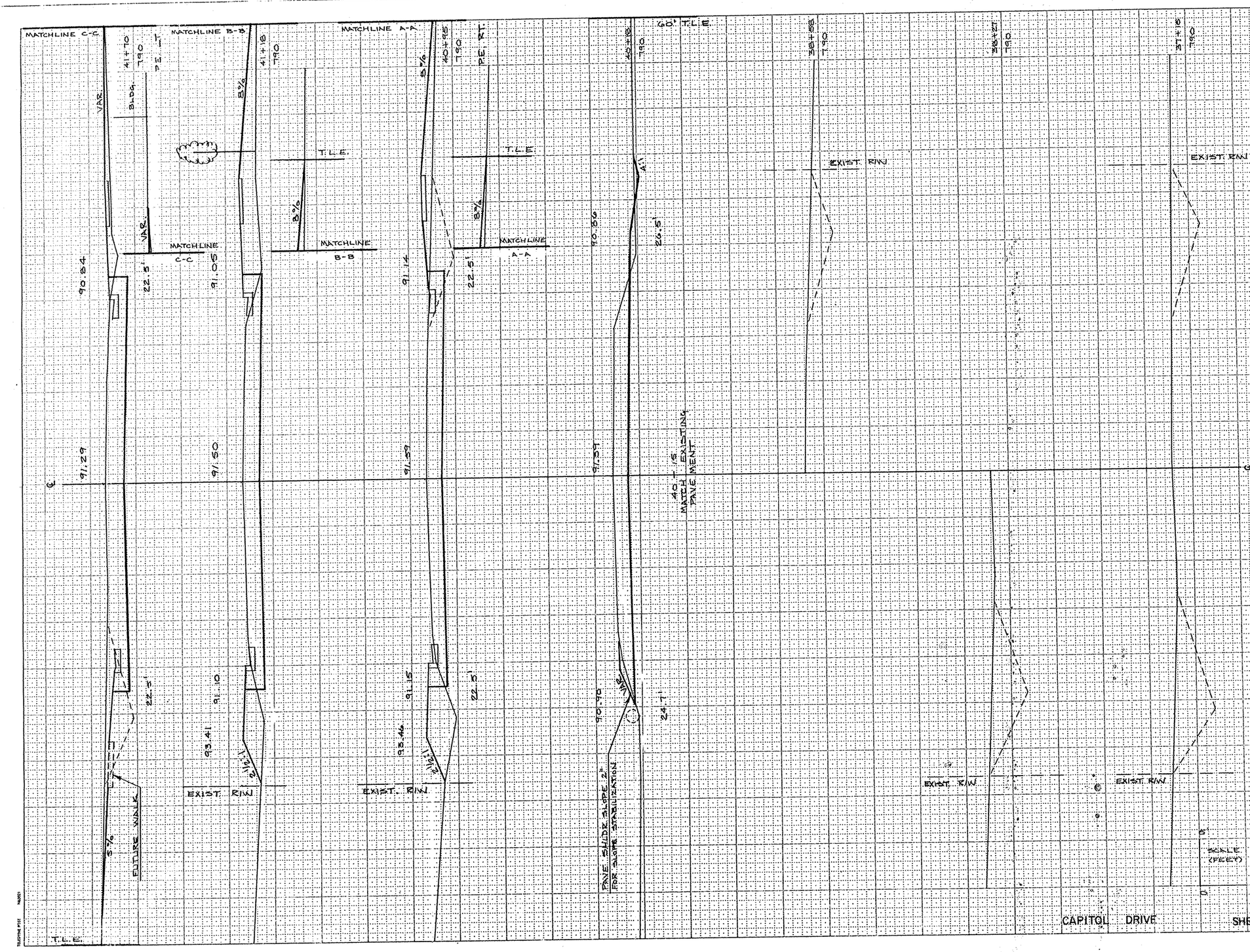

STATE PROJECT NUMBER	SHEET NUMBER
6521-2-71	9.4

STATION	DISTANCE	YARDAGE EXCAVATION INCL.	FILL
8+40			
	3	7	2
8+40			
	77	202	72
9+40			
	23	48	48
10+41			
	52	157	92
10+41			
SHEET TOTAL		429	214

Catalog No. 2130-C121

E-650

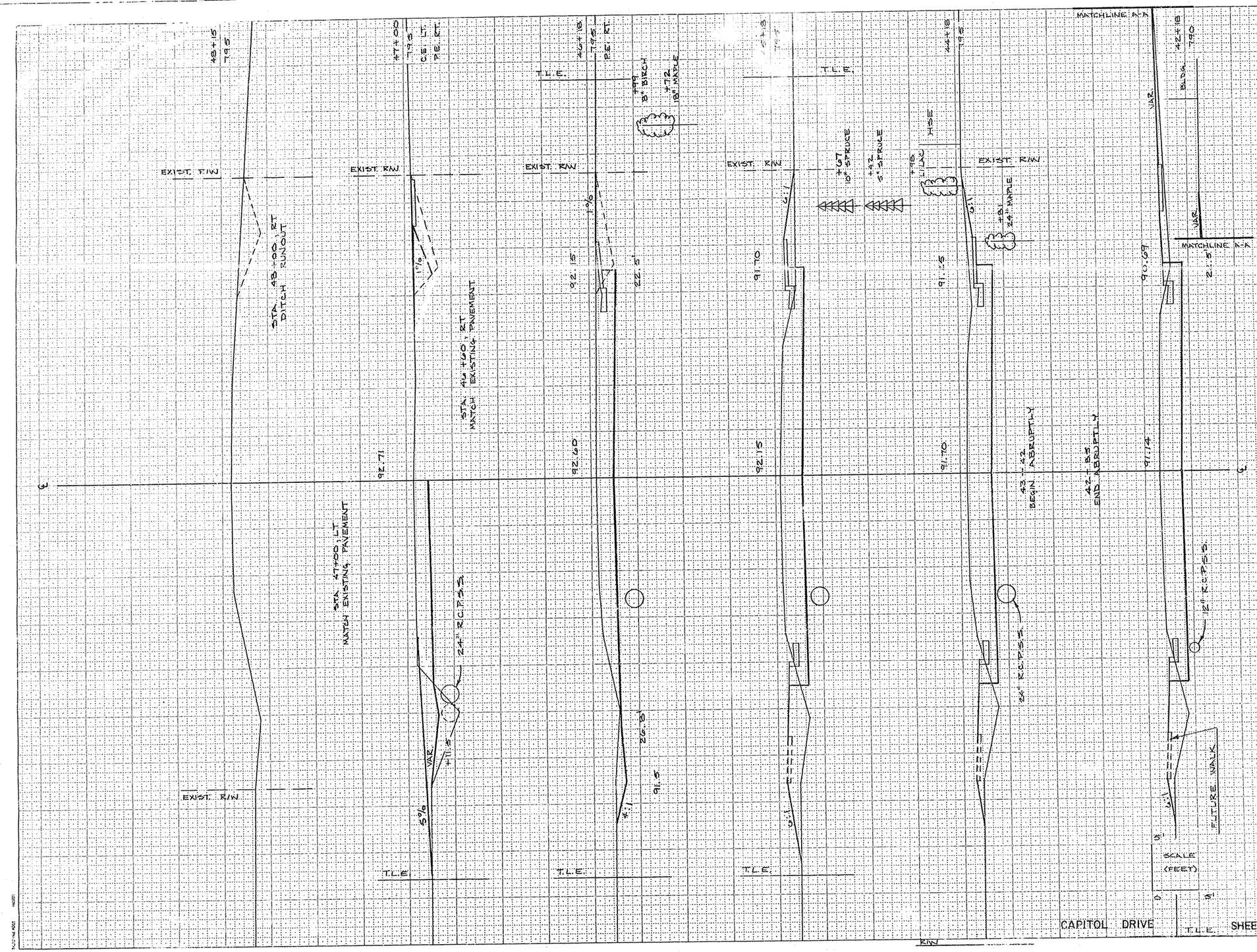

STATE PROJECT NUMBER	SHEET NUMBER
6521-2-71	9.5

STATION	DISTANCE	YARDAGE EXCAVATION UNCL.	FILL
70+41			
	48	169	57
68+42			
	67	254	81
67+42			
59			
42+43			
	76	335	56
38+41			
	100	400	104
45+18			
	100	356	85
46+18			
	82	200	63
47+00			
	100	0	85
48+00			
SHEET TOTAL		1714	521

Catalog No. 2130-C121

E-650

6521-2-71 CTH "A" DISTRICT 3
M1201(14) (TN OF GRAND CHUTE) OUTA.
LYNNDALE DR. & CAPITOL DR. INTERS.
SOMMERS CONSTRUCTION CO.,INC. CONTR.1
GRADE,BASE,ASPH.SUR.,TRAFFIC SIGNALS

FOR OMNI

SIGNAL WIRING DIAGRAM

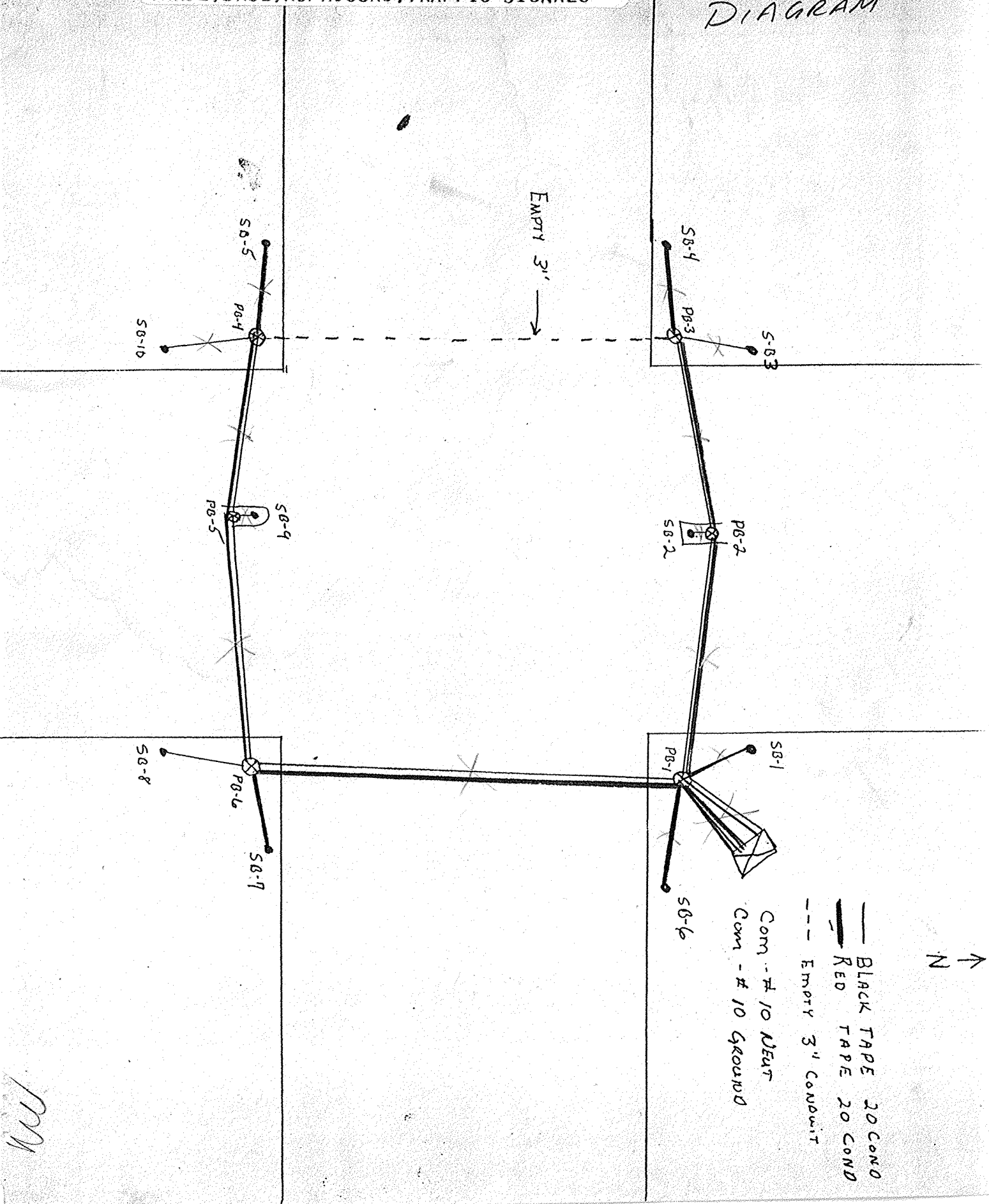

NB+SB MOVEMENTS 20 COND BLACK TAPE			EB+WB MOVEMENTS 20 COND RED TAPE		
NB-R	-	RED	EB-R	-	RED
NB-Y	-	OR	EB-Y	-	OR
NB-G	-	GRE	EB-G	-	GRE
SB-R	-	RED/BLK	WB-R	-	RED/BLK
SB-Y	-	OR/BLK	WB-Y	-	OR/BLK
SB-G	-	GR/BLK	WB-G	-	GR/BLK
DW ϕ8	-	BLK	DW-ϕ6	-	BLK
W-ϕ8	-	BLU	W-ϕ6	-	BLU
DW ϕ4	-	BLK/WH	DW-ϕ2	-	BLK/WH
W-ϕ4	-	BLU/WH	W-ϕ2	-	BLU/WH
Y← ϕ1	-	RED/WH	Y← ϕ3	-	RED/WH
G← ϕ1	-	GR/WH	G← ϕ3	-	GRE/WH
Y← ϕ5	-	OR/RED	PB-Com	-	WH
G← ϕ5	-	BLU/RED	PB-ϕ2	-	WH/RED
PB Com	-	WH	PB-ϕ6	-	RED/GRE
PB ϕ8	-	RED/GRE			
PB ϕ4	-	WH/RED			

ARES - BLK/RED, BLU/BLK, WH/BLK.

SPARES BLK/RED, BLU/RED, OR/RED
WH/BLK, BLU/BLK

11 = D1
21 = D3
31 = D5
41 = D7
51 = D9
61 = D11
81 = D15